(No Model.)

P. H. CONNER.

HAY LOADER COUPLING.

No. 590,610. Patented Sept. 28, 1897.

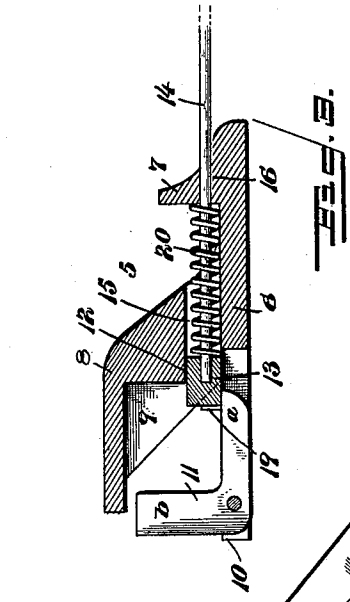

Fig. 3.

Fig. 2.

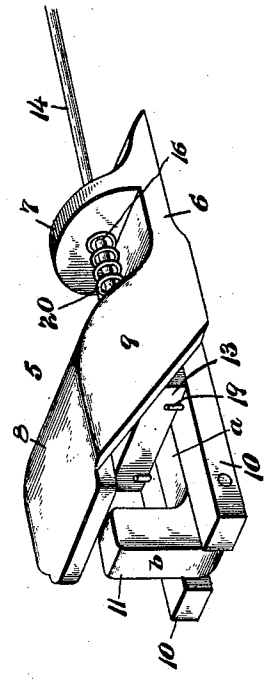

Fig. 1.

Fig. 7.

Inventor

Patrick H. Conner

Witnesses

E. K. Stewart

Theodore Dalton

By his Attorneys,

C. A. Snow & Co.

THE NORRIS PETERS CO., PHOTO-LITHO., WASHINGTON, D. C.

UNITED STATES PATENT OFFICE.

PATRICK H. CONNER, OF MONTICELLO, IOWA.

HAY-LOADER COUPLING.

SPECIFICATION forming part of Letters Patent No. 590,610, dated September 28, 1897.

Application filed January 20, 1897. Serial No. 619,963. (No model.)

To all whom it may concern

Be it known that I, PATRICK H. CONNER, a citizen of the United States, residing at Monticello, in the county of Jones and State of Iowa, have invented a new and useful Hay-Loader Coupling, of which the following is a specification.

This invention relates to an improved device for connecting a hay-loader to the wagon with which it operates and for permitting said hay-loader to be quickly and easily disconnected when the loading has been completed and without necessitating a descent from the loaded wagon.

In the accompanying drawings, Figure 1 represents a side elevation of a hay-loader and a wagon or a portion thereof, showing my improvements used in connection with the same; Fig. 2, an enlarged perspective of the coupling, showing it detached from the loader; Fig. 3, a longitudinal section of the coupling.

The reference-numeral 1 indicates the hay-loader, which may be of any construction or form and which is carried by the wheels 2.

3 indicates the usual tongue with which hay-loaders are provided, the purpose of which is to facilitate the connection of the hay-loader to the wagon 4.

5 indicates the coupling, which consists of a base-plate 6, provided at its rear end with the lug 7 and at its middle with an upwardly and forwardly projecting portion 8, having the side plates 9 rigidly secured thereto or formed integral therewith, preferably the latter. The front end of the plate 6 is bifurcated to form the arms 10, between which the hook 11 is pivoted. The hook 11 is shaped as a bell-crank and is pivoted between the arms 10 at its elbow, its arm *a* being provided with a beveled end, while the end of the arm *b* is square. Formed in the portion 8, directly adjacent to the plate 6, is the recess 12, which is adapted for the reception of the block 13.

The block 13 fits snugly within the recess 12 and has connected to it the rod 14, which proceeds rearwardly through the opening 15 of the part 8 and through the opening 16 of the lug 7 to a point a short distance rearward of the coupling. The rear end of the rod 14 is pivotally connected to the lower arm of the lever 17, which is fulcrumed to the hay-loader and which has its upper end or arm connected to the cord 18. The cord 18 proceeds upwardly to the upper end of the loader, so that it can be reached by a person standing on the loaded wagon. The purpose of this will be hereinafter described.

Rigidly secured to each of the arms 10 is the vertically-extending stud 19. These studs are transversely alined and are provided to prevent excessive forward movement of the block 13. The block 13 is given a tendency forward by means of the spring 20, which is made to embrace the rod 14 and to pass through the opening 15 of the forwardly-extending portion 8, while its rear end bears against the lug 7. By these means the block 13 is kept up against the studs 19.

Fixed to the wagon 4 and projecting rearwardly therefrom is the rigid clevis 21, which is arranged on a line with the hook 11, so that when the loader and wagon are made to engage the clevis will pass between the plate 6 and the overhanging portion of the extension 8. The normal position of the hook 11 is with its arm *a* horizontal and under the block 13 and with its arm *b* vertical, so that it will hold the clevis 21, as shown in Fig. 1.

Supposing now that the wagon 4 has been loaded and that it is desired to detach the loader 1 therefrom, the hand on the wagon should reach to the cord 18 and pull the same, which will rock lever 17 and draw rod 14 rearwardly, thus similarly moving the block 13 and making it possible for the hook 11 to swing on its fulcrum, so as to throw the arm *b* horizontal and the arm *a* vertical. This will release the clevis 4 and consequently disconnect the two machines. When it is desired to again connect the two parts, all that will be necessary is to back the wagon against the coupling and so that the clevis 21 will engage the vertically-extending arm *a* of the hook 11. This will rock the hook 11 and cause the beveled end of the arm *a* to engage the block 13 and push the same rearwardly until it is possible for the said arm to pass below the block, thus securing the arm *b* in a vertical position and locking the clevis 21 to the coupling.

My invention is especially useful in that it is unnecessary when using it for the farm-hand who is engaged in loading or trimming

the hay on the wagon to descend from the load in disconnecting the loader. To effect this, all he has to do is to draw on the cord 18, which will result in the uncoupling operation, as explained above.

It will be observed that owing to the downwardly and rearwardly inclined front edges of the plates 9 the clevis 21 upon engagement with the coupling is forced down against the plate 6, thus insuring the effective engagement of the arm *a* and block 13 and consequent connection of the coupling.

Various changes in the size, proportion, and arrangement of the parts of my invention may be resorted to without departing from the substance thereof. Therefore I desire it understood that I am not restricted to the precise construction herein shown, but am entitled to all such variations as come within the above definition.

Having described my invention, I claim—

The combination in a coupling to connect hay-loaders to wagons, of a base-plate secured to the loader and provided with a bifurcated front end and an upwardly and forwardly projecting extension, a bell-crank-shaped hook fulcrumed between the arms of the bifurcated front end to swing in a vertical direction, a spring-actuated block slidably supported on the base-plate and adapted to engage one arm of said hook and hold it in a horizontal position and the other arm in a vertical position to engage a clevis on the wagon, stops on said forwardly-projecting arms of the base-plate to limit the forward movement of said block, and a cord connected to the sliding block and extending to the upper portion of the loader, by means of which the block may be moved out of engagement with the hook, substantially as described.

In testimony that I claim the foregoing as my own I have hereto affixed my signature in the presence of two witnesses.

PATRICK H. CONNER.

Witnesses:
O. R. RICKER,
H. C. BOHLKIN.