Office de la Propriété Intellectuelle du Canada
Un organisme d'Industrie Canada

Canadian Intellectual Property Office
An agency of Industry Canada

CA 2395297 C 2006/06/13

(11)(21) 2 395 297

(12) BREVET CANADIEN
CANADIAN PATENT

(13) C

(86) Date de dépôt PCT/PCT Filing Date: 2001/01/31
(87) Date publication PCT/PCT Publication Date: 2001/08/02
(45) Date de délivrance/Issue Date: 2006/06/13
(85) Entrée phase nationale/National Entry: 2002/06/17
(86) N° demande PCT/PCT Application No.: US 2001/003192
(87) N° publication PCT/PCT Publication No.: 2001/054910
(30) Priorité/Priority: 2000/01/31 (US09/495,060)

(51) Cl.Int./Int.Cl. *B41J 2/175* (2006.01)

(72) Inventeurs/Inventors:
STEINMETZ, CHARLES R., US;
STURGEON, SCOTT D., US;
JOHNSON, DAVID C., US;
HENDRICKS, JEFFREY T., US

(73) Propriétaire/Owner:
HEWLETT-PACKARD COMPANY, US

(74) Agent: SIM & MCBURNEY

(54) Titre : CONTENEUR D'ENCRE PERMETTANT D'ETABLIR DES CONNEXIONS ELECTRIQUES ET FLUIDIQUES FIABLES AVEC UNE STATION RECEPTRICE

(54) Title: INK CONTAINER FOR RELIABLE ELECTRICAL AND FLUIDIC CONNECTIONS TO A RECEIVING STATION

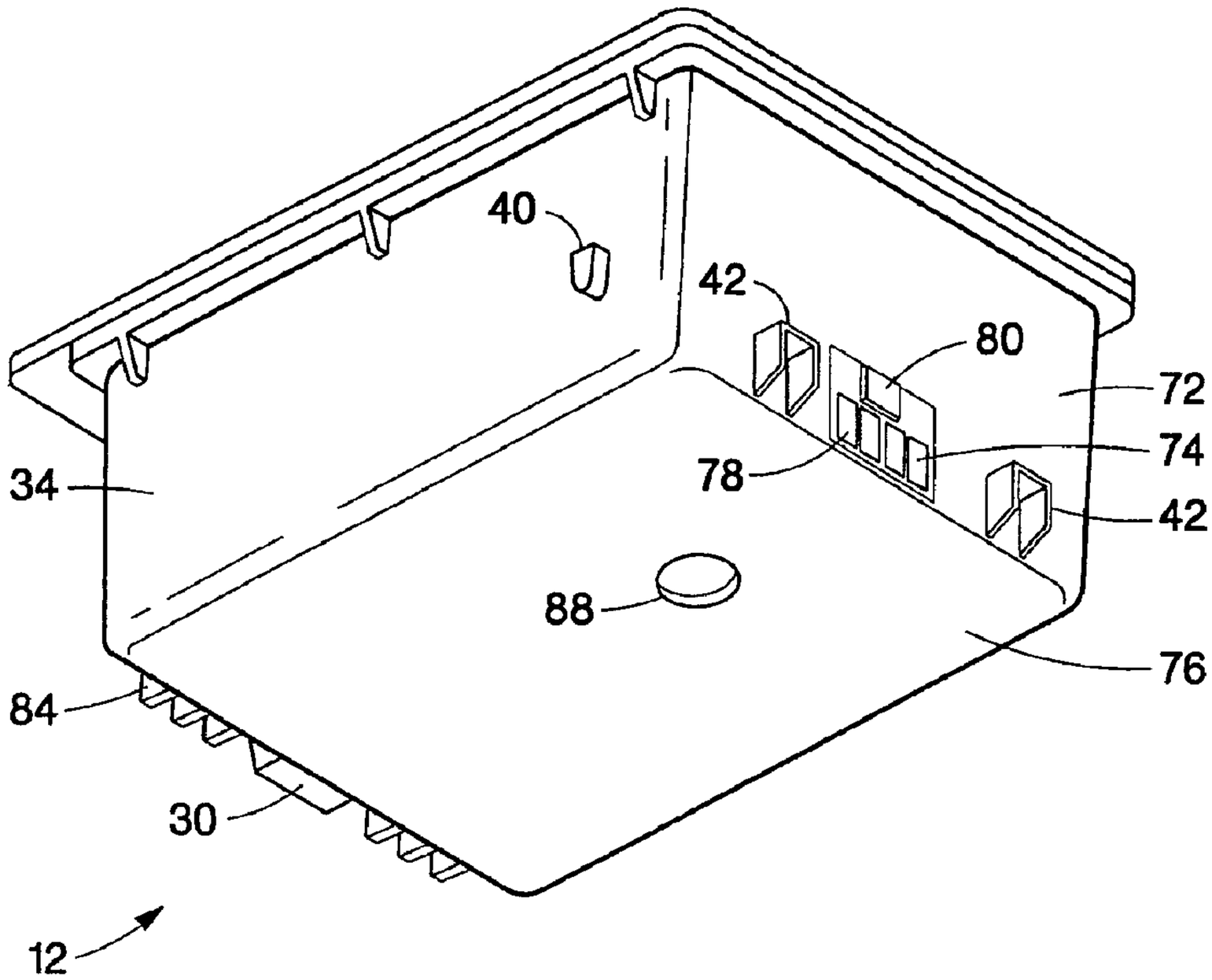

(57) Abrégé/Abstract:
The present disclosure relates to a replaceable ink reservoir (12) for installation into a printing system (10) that has a moveable carriage (20) for repositioning a printing portion (16) relative to print media (22). The replaceable ink reservoir (12) includes an ink reservoir (12) that does not have an integral printing portion (16). Also included is an electrical storage device (80) for storing information. The installation of the ink reservoir (12) into the moveable carriage (20) establishes both fluid communication between the ink reservoir (12) and the moveable carriage (20) and establishes electrical continuity between the electrical storage device (80) and the moveable carriage (20).

CA 02395297 2002-06-17

(12) INTERNATIONAL APPLICATION PUBLISHED UNDER THE PATENT COOPERATION TREATY (PCT)

(19) World Intellectual Property Organization
International Bureau

(43) International Publication Date
2 August 2001 (02.08.2001)

PCT

(10) International Publication Number
WO 01/54910 A3

(51) International Patent Classification[7]: B41J 2/175

(21) International Application Number: PCT/US01/03192

(22) International Filing Date: 31 January 2001 (31.01.2001)

(25) Filing Language: English

(26) Publication Language: English

(30) Priority Data:
09/495,060 31 January 2000 (31.01.2000) US

(71) Applicant *(for all designated States except US)*: **HEWLETT-PACKARD COMPANY** [US/US]; Intellectual Property Administration, 3404 East Harmony Road, P.O. Box 272400, Mail Stop 35, Fort Collins, CO 80527-2400 (US).

(72) Inventors; and

(75) Inventors/Applicants *(for US only)*: **STEINMETZ, Charles, R.** [US/US]; 1165 Northwest Overlook Drive, Corvallis, OR 97330 (US). **STURGEON, Scott, D.** [US/US]; 17004 Southeast 17th Way, Vancouver, WA 98683 (US). **JOHNSON, David, C.** [US/US]; 3902 Northeast 36th Avenue, Portland, OR 97212 (US). **HENDRICKS, Jeffrey, T.** [US/US]; 2900 Northeast 232nd Avenue, Camas, WA 98607 (US).

(74) Agent: **BILLIG, Patrick**; Hewlett-Packard Company, Intellectual Property Administration, 3404 E. Harmony Road, P.O. Box 272400, Mail Stop 35, Fort Collins, CO 80527-2400 (US).

(81) Designated States *(national)*: AE, AG, AL, AM, AT, AU, AZ, BA, BB, BG, BR, BY, BZ, CA, CH, CN, CR, CU, CZ, DE, DK, DM, DZ, EE, ES, FI, GB, GD, GE, GH, GM, HR, HU, ID, IL, IN, IS, JP, KE, KG, KP, KR, KZ, LC, LK, LR, LS, LT, LU, LV, MA, MD, MG, MK, MN, MW, MX, MZ, NO, NZ, PL, PT, RO, RU, SD, SE, SG, SI, SK, SL, TJ, TM, TR, TT, TZ, UA, UG, US, UZ, VN, YU, ZA, ZW.

(84) Designated States *(regional)*: ARIPO patent (GH, GM, KE, LS, MW, MZ, SD, SL, SZ, TZ, UG, ZW), Eurasian patent (AM, AZ, BY, KG, KZ, MD, RU, TJ, TM), European patent (AT, BE, CH, CY, DE, DK, ES, FI, FR, GB, GR, IE,

[Continued on next page]

(54) Title: INK CONTAINER FOR RELIABLE ELECTRICAL AND FLUIDIC CONNECTIONS TO A RECEIVING STATION

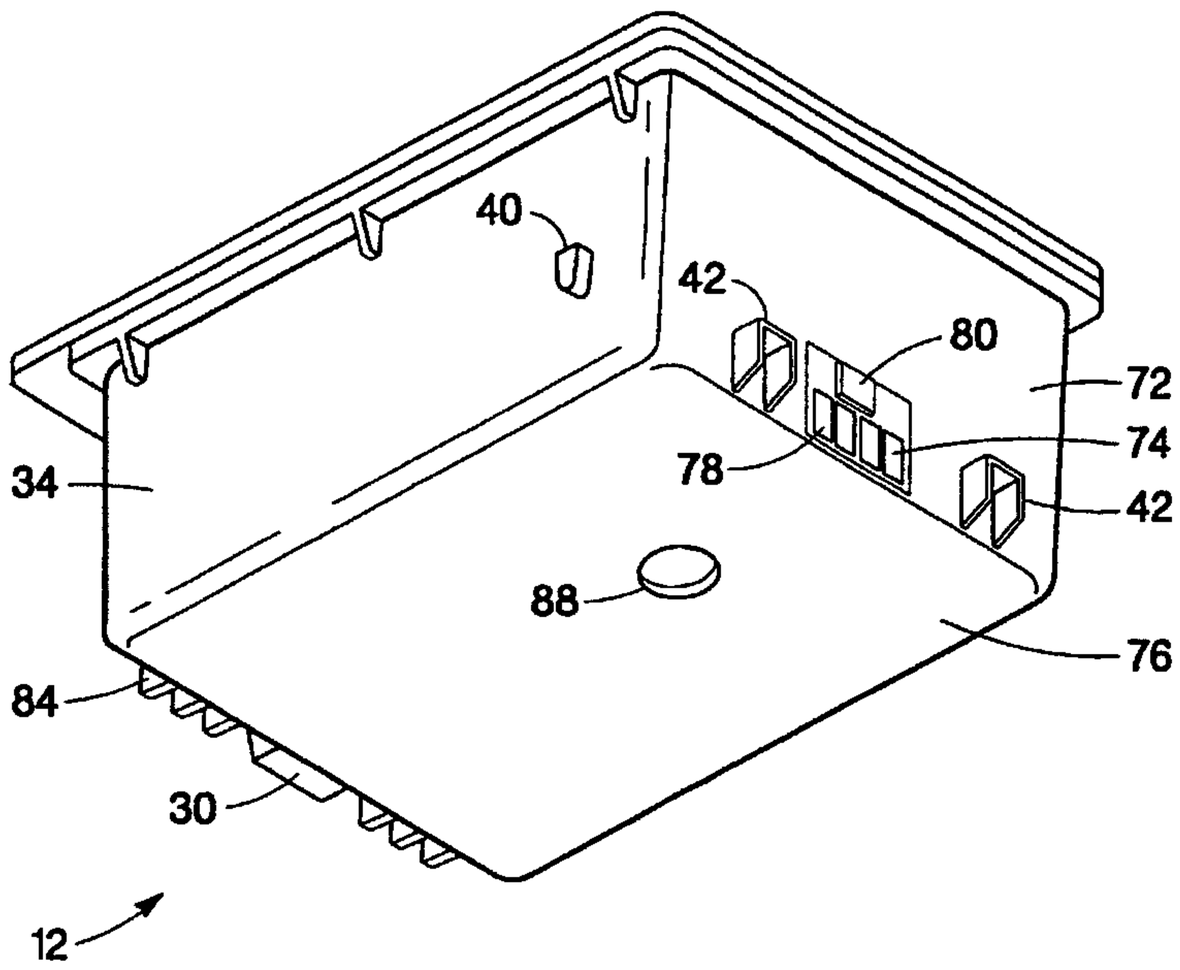

(57) Abstract: The present disclosure relates to a replaceable ink reservoir (12) for installation into a printing system (10) that has a moveable carriage (20) for repositioning a printing portion (16) relative to print media (22). The replaceable ink reservoir (12) includes an ink reservoir (12) that does not have an integral printing portion (16). Also included is an electrical storage device (80) for storing information. The installation of the ink reservoir (12) into the moveable carriage (20) establishes both fluid communication between the ink reservoir (12) and the moveable carriage (20) and establishes electrical continuity between the electrical storage device (80) and the moveable carriage (20).

WO 01/54910 A3

WO 01/54910 A3



IT, LU, MC, NL, PT, SE, TR), OAPI patent (BF, BJ, CF, CG, CI, CM, GA, GN, GW, ML, MR, NE, SN, TD, TG).

Published:
— *with international search report*

(88) Date of publication of the international search report:
7 March 2002

For two-letter codes and other abbreviations, refer to the "Guidance Notes on Codes and Abbreviations" appearing at the beginning of each regular issue of the PCT Gazette.

INK CONTAINER FOR RELIABLE ELECTRICAL AND FLUIDIC CONNECTIONS TO A RECEIVING STATION

BACKGROUND OF THE INVENTION

The present invention relates to ink containers for providing ink to inkjet printers. More specifically, the present invention relates to an ink container that is configured for insertion into a receiving station within an inkjet printing system to establish fluid and electrical connection therewith.

Inkjet printers frequently make use of an inkjet printhead mounted within a carriage that is moved relative to a print media, such as paper. As the printhead is moved relative to the print media, a control system activates the printhead to deposit or eject ink droplets onto the print media to form images and text. Ink is provided to the printhead by a supply of ink that is either integral with the printhead, as in the case of a disposable print cartridge, or by a supply of ink that is replaceable separate from the printhead.

One type of previously used printing system makes use of the ink supply that is carried with the carriage. This ink supply has been formed integral with the printhead, whereupon the entire printhead and ink supply are replaced when ink is exhausted. Alternatively, the ink supply can be carried with the carriage and be separately replaceable from the printhead. For the case where the ink supply is separately replaceable, the ink supply is replaced when exhausted. The printhead is then replaced at the end of printhead life. Regardless of where the ink supply is located within the printing system, it is critical that the ink supply provides a reliable supply of ink to the inkjet printhead.

One type of ink supply is disclosed in PCT Patent Application WO-A-99 59823 which is directed to an inkjet printing apparatus that includes a carriage mounted holder. The holder includes ink supply needles in fluid communication with a printhead. The holder is adapted to receive ink cartridges having ink supply ports that delvier ink to the ink supply needles. Each ink cartridge further

AMENDED SHEET

Empf zeit:28/02/2002 17:56 Empf nr :1X4 P 11/14

includes a circuit boarder having a semiconductor storage means connected to contacts. The contacts of the ink cartridges are adapted to engage corresponding contacts on contact mechanisms of the holder to provide communication between the ink cartridges and the printing apparatus. Another type of ink supply is disclosed in U.S. Patent 5,936,740 which is directed to an inkjet recording apparatus having a recording head cartridge that is removably mounted to a carraige. The recording head cartridge is defined by an ink container holder comprising a nozzle portion for ejecting ink in response to a recording signal and a mono-color holder which removably holds an ink container for storing ink. The ink contrainer includes a container having an ink holder member. A bottom wall of the container includes an ink delivery supply port that receives an ink tapping tube when the ink container is mounted to the holder.

There is an ever present need for inkjet printing systems that make use of replaceable ink containers that are easy to install and remove. The installation of the ink container should produce reliable fluidic and electrical connection to the printer. These ink containers should be relatively easy to manufacture,

AMENDED SHEET

Empf.zeit:28/02/2002 22:30 Empf.nr.:103 P.010

thereby tending to reduce the ink supply cost. Reduction of the ink supply cost tends to reduce the per page printing costs of the printing system.

SUMMARY OF THE INVENTION

One aspect of the present invention is a replaceable ink container for providing ink to an inkjet printing system. The inkjet printing system has a receiving station mounted to a scanning carriage. The receiving station has a fluid inlet and a plurality of electrical contacts electrically connected to a printing system control portion. The replaceable ink container includes a fluid outlet configured for connection to the fluid inlet on the receiving station. Also included is a plurality of electrical contacts electrically connected to an electrical storage device. Upon insertion of the replaceable ink container into the receiving station each of the plurality of electrical contacts are so disposed and arranged on the replaceable ink container to engage each of the plurality of electrical contacts on the receiving station to operably couple the electrical storage device with the printing system control portion. Additionally, insertion of the replaceable ink container into the receiving station allows the fluid outlet disposed and arranged on the replaceable ink container to operatively couple with the fluid inlet to establish fluid communication between the replaceable ink container and the receiving station.

Another aspect of the present invention includes a capillary storage material disposed within the replaceable ink container. The fluid inlet is a hollow member that extends upwardly from a bottom surface of the receiving station so that with the replaceable ink container installed in the receiving station the hollow member compresses the capillary storage material to provide a region of increased capillarity in the capillary storage material adjacent the hollow member.

Accordingly, in one aspect of the present invention there is provided a replaceable ink container for providing ink to an inkjet printing system, the inkjet printing system having a receiving station mounted to a scanning carriage, the receiving station having a fluid inlet and a plurality of electrical contacts electrically connected to a printing system control portion, the replaceable ink container comprising:

an ink reservoir having a leading end surface relative to a direction of insertion of the replaceable ink container into the receiving station, and a bottom end surface orthogonal to the leading end surface, the bottom end surface defining a fluid outlet configured for connection to the fluid inlet on the receiving station;

an electrical storage device coupled to the ink reservoir for storing information related to the replaceable ink container;

a plurality of electrical contacts mounted to the leading end surface and electrically connected to the electrical storage device, wherein each of the plurality of electrical contacts on the ink reservoir are configured to engage each of the plurality of electrical contacts on the receiving station to operably couple the electrical storage device with the printing system control portion; and

an engagement feature disposed on the leading end surface immediately adjacent to the bottom end surface, the engagement feature configured to engage a corresponding engagement feature on the receiving station to secure the leading end surface of the ink reservoir to the receiving station.

According to another aspect of the present invention there is provided a method for establishing a electrical and fluidic connection between a replaceable ink container and a moving carriage mounted receiving station of an inkjet printing system, method comprising:

urging the replaceable ink container toward a backwall of the receiving station to engage an engagement feature disposed on a leading end surface of the ink container immediately adjacent to a bottom surface of the ink container with a corresponding engagement feature on the backwall, the backwall having at least one electrical contact disposed thereon; and

pivoting the replaceable ink container downward toward a bottom wall of the receiving station to operatively couple a fluid outlet on the bottom surface of the replaceable ink container with a fluid inlet proximate the bottom wall of the receiving station and to operatively couple the at least one electrical contact on the receiving station with at least one electrical contact on the leading end surface of the replaceable ink container that is orthogonal to the bottom surface to establish both electrical and fluid connections between the replaceable ink container and the receiving station, the at least one electrical contact of the replaceable ink container being electrically coupled to an electrical storage device for storing information related to the replaceable ink container.

BRIEF DESCRIPTION OF THE DRAWINGS

Fig. 1 is one exemplary embodiment of an ink jet printing system of the present invention shown with a cover opened to show a plurality of replaceable ink containers of the present invention.

Fig. 2 is a schematic representation of the inkjet printing system shown in Fig. 1.

Fig. 3 is a greatly enlarged perspective view of a portion of a scanning carriage showing the replaceable ink containers of the present invention positioned in a receiving station that provides fluid communication between the replaceable ink containers and one or more printhead.

Fig. 4 is a side plan view of a portion of the scanning carriage showing guiding and latching features associated with each of the replaceable ink container and the receiving station for securing the replaceable ink container, thereby allowing fluid communication with the printhead.

Fig. 5 is a receiving station shown in isolation for receiving one or more replaceable ink containers of the present invention.

Figs. 6a, 6b, 6c, and 6d are isometric views of a three-color replaceable ink container of the present invention shown in isolation.

Fig. 7 is a perspective view of a single color replaceable ink container of the present invention.

Fig. 8 is a top plan view of an electrical storage device that is electrically connected to a plurality of electrical contacts.

Fig. 9a, 9b, and 9c depict the method of the present invention for inserting the replaceable ink container into the supply station.

Fig. 10 is a greatly enlarged view shown in breakaway of the method and apparatus of the present invention for achieving fluid connection between the ink container and the supply station.

Fig. 11 is a top plan representation of the ink container installed in the supply station to establish electrical connection between the ink container and the supply station.

Fig. 12a and 12b depict the passage of the replaceable ink container over an upstanding fluid inlet on the receiving station viewed from a side view and an end view, respectively.

Figs. 13a, 13b and 13c depict a method of the present invention for removing the replaceable ink container from the receiving station.

DETAILED DESCRIPTION OF THE PREFERRED EMBODIMENT

Fig. 1 is a perspective view of one exemplary embodiment of a printing system 10 shown with its cover open, that includes at least one replaceable ink container 12 that is installed in a receiving station 14. With the replaceable ink container 12 properly installed into the receiving portion 14, ink is provided from the replaceable ink container 12 to at least one inkjet printhead 16. The inkjet printhead 16 is responsive to activation signals from a printer portion 18 to deposit ink on print media. As ink is ejected from the printhead 16, the printhead 16 is replenished with ink from the ink container 12. In one preferred embodiment the replaceable ink container 12, receiving station 14, and inkjet printhead 16 are each part of a scanning carriage that is moved relative to a print media 22 to accomplish printing. The printer portion 18 includes a media tray 24 for receiving the print media 22. As the print media 22 is stepped through a print zone, the scanning carriage 20 moves the printhead 16 relative to the print media 22. The printer portion 18 selectively activates the printhead 16 to deposit ink on print media 22 to thereby accomplish printing.

The scanning carriage 20 is moved through the print zone on a scanning mechanism which includes a slide rod 26 on which the scanning carriage 20 slides as the scanning carriage 20 moves through a scan axis. A positioning means (not shown) is used for precisely positioning the scanning carriage 20. In addition, a paper advance mechanism (not shown) is used to step the print media 22 through the print zone as the scanning carriage 20 is moved along the scan axis. Electrical signals are provided to the scanning carriage 20 for selectively activating the printhead 16 by means of an electrical link such as a ribbon cable 28.

AMENDED SHEET
Empf.zeit:28/02/2002 22:37 Empf.nr.:183 P.018

An important aspect of the present invention is the method and apparatus for inserting the ink container 12 into the receiving station 14 such that the ink container 12 forms proper fluidic and electrical interconnect with the printer portion 18. It is essential that both proper fluidic and electrical connection be established between the ink container 12 and the printer portion 18. The fluidic interconnection allows a supply of ink within the replaceable ink container 12 to be fluidically coupled to the printhead 16 for providing a source of ink to the printhead 16. The electrical interconnection allows information to be passed between the replaceable ink container 12 and the printer portion 18. Information passed between the replaceable ink container 12 and the printer portion 18 can include information related to the compatibility of replaceable ink container 12 with printer portion 18 and operation status information such as the ink level information, to name some examples.

The method and apparatus of the present invention, as will be discussed with respect to Figs. 2 through 13, depict those features which allow the replaceable ink container 12 to be inserted into the receiving station 14 in such a manner that reliable electrical and fluidic connection is established between the replaceable ink container 12 and the receiving station 14. In addition, the method and apparatus of the present invention allows for the insertion and removal of the replaceable printing component 12 from the printer portion 18 in a reliable fashion while allowing the overall height of the printer portion 18, represented by dimension designated as "h" in Fig. 1 to be a relatively small dimension, thereby providing a relatively low profile printing system 10. It is important that the printing system 10 have a low profile to provide a more compact printing system as well as to allow the printer portion to be used in a variety of printing applications.

Fig. 2 is a simplified schematic representation of the inkjet printing system 10 of the present invention shown in Fig. 1. Fig. 2 is simplified to illustrate a single printhead 16 connected to a single ink container 12.

The inkjet printing system 10 of the present invention includes the printer portion 18 and the ink container 12, which is configured to be received by the printer portion 18. The printer portion 18 includes the inkjet printhead 16 and a

controller 29. With the ink container 12 properly inserted into the printer portion 18, an electrical and fluidic coupling is established between the ink container 12 and the printer portion 18. The fluidic coupling allows ink stored within the ink container 12 to be provided to the printhead 16. The electrical coupling allows information to be passed between an electrical storage device 80 disposed on the ink container 12 and the printer portion 18. The exchange of information between the ink container 12 and the printer portion 18 is to ensure the operation of the printer portion 18 is compatible with the ink contained within the replaceable ink container 12 thereby achieving high print quality and reliable operation of the printing system 10.

The controller 29, among other things, controls the transfer of information between the printer portion 18 and the replaceable ink container 12. In addition, the controller 29 controls the transfer of information between the printhead 16 and the controller 29 for activating the printhead to selectively deposit ink on print media. In addition, the controller 29 controls the relative movement of the printhead 16 and print media. The controller 29 performs additional functions such as controlling the transfer of information between the printing system 10 and a host device such as a host computer (not shown).

In order to ensure the printing system 10 provides high quality images on print media, it is necessary that the operation of the controller 29 account for the particular replaceable ink container 12 installed within the printer portion 18. The controller 29 utilizes the parameters that are provided by the electrical storage device 80 to account for the particular replaceable ink container 12 installed in the printer portion 18 to ensure reliable operation and ensure high quality print images.

Among the parameters, for example, that can be stored in the electrical storage device 80 associated with the replaceable ink container 12 can include the following: a date code associated with the replaceable ink container 12, a date code of initial insertion of the ink container 12, system coefficients, ink type and ink color, ink container size, printer model number or identification number and cartridge usage information, just to name a few.

Fig. 3 is a perspective view of a portion of the scanning carriage 20 showing a pair of replaceable ink containers 12 properly installed in the receiving station 14. An inkjet printhead 16 is in fluid communication with the receiving station 14. In the preferred embodiment, the inkjet printing system 10 shown in Fig. 1 includes a tri-color ink container containing three separate ink colors and a second ink container containing a single ink color. In this preferred embodiment, the tri-color ink container contains cyan, magenta, and yellow inks, and the single color ink container contains black ink for accomplishing four-color printing. The replaceable ink containers 12 can be partitioned differently to contain fewer than three ink colors or more than three ink colors if more are required. For example, in the case of high fidelity printing, frequently six or more colors are used to accomplish printing.

The scanning carriage portion 20 shown in Fig. 3 is shown fluidically coupled to a single printhead 16 for simplicity. In the preferred embodiment, four inkjet printheads 16 are each fluidically coupled to the receiving station 14. In this preferred embodiment, each of the four printheads are fluidically coupled to each of the four colored inks contained in the replaceable ink containers. Thus, the cyan, magenta, yellow and black printheads 16 are each coupled to their corresponding cyan, magenta, yellow and black ink supplies, respectively. Other configurations which make use of fewer printheads than four are also possible. For example, the printhead 16 can be configured to print more than one ink color by properly partitioning the printhead 16 to allow a first ink color to be provided to a first group of ink nozzles and a second ink color to be provided to a second group of ink nozzles, with the second group of ink nozzles different from the first group. In this manner, a single printhead 16 can be used to print more than one ink color allowing fewer than four printheads 16 to accomplish four-color printing. The fluidic path between each of the replaceable ink containers 12 and the printhead 16 will be discussed in more detail with respect to Fig. 4.

Each of the replaceable ink containers 12 include a latch 30 for securing the replaceable ink container 12 to the receiving station 14. The receiving station 14 in the preferred embodiment includes a set of keys 32 that interact

with corresponding keying features (not shown) on the replaceable ink container 12. The keying features on the replaceable ink container 12 interact with the keys 32 on the receiving station 14 to ensure that the replaceable ink container 12 is compatible with the receiving station 14.

Fig. 4 is a side plan view of the scanning carriage portion 20 shown in Fig. 2. The scanning carriage portion 20 includes the ink container 12 shown properly installed into the receiving station 14, thereby establishing fluid communication between the replaceable ink container 12 and the printhead 16.

The replaceable ink container 12 includes a reservoir portion 34 for containing one or more quantities of ink. In the preferred embodiment, the tri-color replaceable ink container 12 has three separate ink containment reservoirs, each containing ink of a different color. In this preferred embodiment, the monochrome replaceable ink container 12 is a single ink reservoir 34 for containing ink of a single color.

In the preferred embodiment, the reservoir 34 has a capillary storage member (not shown) disposed therein. The capillary storage member is a porous member having sufficient capillarity to retain ink to prevent ink leakage from the reservoir 34 during insertion and removal of the ink container 12 from the printing system 10. This capillary force must be sufficiently great to prevent ink leakage from the ink reservoir 34 over a wide variety of environmental conditions such as temperature and pressure changes. In addition, the capillarity of the capillary member is sufficient to retain ink within the ink reservoir 34 for all orientations of the ink reservoir as well as a reasonable amount of shock and vibration the ink container may experience during normal handling. The preferred capillary storage member is a network of heat bonded polymer fibers described in US Patent Application entitled "Ink Reservoir for an Inkjet Printer" attorney docket 10991407 filed on October 29, 1999, serial number 09/430,400, assigned to the assignee of the present invention and incorporated herein by reference.

Once the ink container 12 is properly installed into the receiving station 14, the ink container 12 is fluidically coupled to the printhead 16 by way of fluid interconnect 36. Upon activation of the printhead 16, ink is ejected from the

ejection portion 38 producing a negative gauge pressure, sometimes referred to as backpressure, within the printhead 16. This negative gauge pressure within the printhead 16 is sufficient to overcome the capillary force resulting from the capillary member disposed within the ink reservoir 34. Ink is drawn by this backpressure from the replaceable ink container 12 to the printhead 16. In this manner, the printhead 16 is replenished with ink provided by the replaceable ink container 12.

The fluid interconnect 36 is preferably an upstanding ink pipe that extends upwardly into the ink container 12 and downwardly to the inkjet printhead 16. The fluid interconnect 36 is shown greatly simplified in Fig. 4. In the preferred embodiment, the fluid interconnect 36 is a manifold that allows for offset in the positioning of the printheads 16 along the scan axis, thereby allowing the printhead 16 to be placed offset from the corresponding replaceable ink container 12. In the preferred embodiment, the fluid interconnect 36 extends into the reservoir 34 to compress the capillary member, thereby forming a region of increased capillarity adjacent the fluid interconnect 36. This region of increased capillarity tends to draw ink toward the fluid interconnect 36, thereby allowing ink to flow through the fluid interconnect 36 to the printhead 16. As will be discussed, it is crucial that the ink container 12 be properly positioned within the receiving station 14 such that proper compression of the capillary member is accomplished when the ink container 12 is inserted into the receiving station. Proper compression of the capillary member is necessary to establish a reliable flow of ink from the ink container 12 to the printhead 16.

The replaceable ink container 12 further includes a guide feature 40, an engagement feature 42, a handle 44 and a latch feature 30 that allow the ink container 12 to be inserted into the receiving station 14 to achieve reliable fluid interconnection with the printhead 16 as well as form reliable electrical interconnection between the replaceable ink container 12 and the scanning carriage 20 as will be discussed with respect to Figs. 9a-9c and 10a-10b.

The receiving station 14 includes a guide rail 46, an engagement feature 48 and a latch engagement feature 50. The guide rail 46 cooperates with the guide rail engagement feature 40 and the replaceable ink container 12 to guide

ink container 12 to the receiving station 14. The ink container 12 is then pressed downward to compress a spring biasing member 52 associated with the receiving station 14 until a latch engagement feature 50 associated with the receiving station 14 engages a hook feature 54 associated with the latch member 30 to secure a back end or trailing end of the ink container 12 to the receiving station 14. It is the cooperation of the features on the ink container 12 with the features associated with the receiving station 14 that allow proper insertion and functional interfacing between the replaceable ink container 12 and the receiving station 14. The receiving station 14 will now be discussed in more detail with respect to Fig. 5.

Fig. 5 is a front perspective view of the ink receiving station 14 shown in isolation. The receiving station 14 shown in Fig. 5 includes a monochrome bay 56 for receiving an ink container 12 containing a single ink color and a tri-color bay 58 for receiving an ink container having three separate ink colors contained therein. In this preferred embodiment, the monochrome bay 56 receives a replaceable ink container 12 containing black ink, and the tri-color bay receives a replaceable ink container containing cyan, magenta, and yellow inks, each partitioned into a separate reservoir within the ink container 12. The receiving station 14 as well as the replaceable ink container 12 can have other arrangements of bays 56 and 58 for receiving ink containers containing different numbers of distinct inks contained therein. In addition, the number of receiving bays 56 and 58 for the receiving station 14 can be fewer or greater than two. For example, a receiving station 14 can have four separate bays for receiving four separate monochrome ink containers 12 with each ink container containing a separate ink color to accomplish four-color printing.

Each bay 56 and 58 of the receiving station 14 includes an aperture 60 for receiving each of the upright fluid interconnects 36 that extends therethrough. The fluid interconnect 36 is a fluid inlet for ink to exit a corresponding fluid

AMENDED SHEET
Empf.zeit:28/02/2002 22:37 Empf.nr.:103 P.019

outlet associated with the ink container 12. An electrical interconnect 62 is also included in each receiving bay 56 and 58. The electrical interconnect 62 includes a plurality of electrical contacts 64. In the preferred embodiment, the electrical contacts 64 are an arrangement of four spring-loaded electrical contacts with proper installation of the replaceable ink container 12 into the corresponding bay of the receiving station 14. Proper engagement with each of the electrical interconnectors 62 and fluid interconnects 36 must be established in a reliable manner.

The guide rails 46 disposed on either side of the fluid interconnects within each bay 56 and 58 engage the corresponding guide feature 40 on either side of the ink container 12 to guide the ink container into the receiving station. When the ink container 12 is fully inserted into the receiving station 14, the engagement features 48 disposed on a back wall 66 of the receiving station 14 engage the corresponding engagement features 42 shown in Fig. 3 on the ink container 12. The engagement features 48 are disposed on either side of the electrical interconnect 62. A biasing means 52 such as a leaf spring is disposed within the receiving station 14. The leaf spring 52 provides a biasing force that tends to urge the ink container 12 upward from a bottom surface 68 of the receiving station 14. The leaf spring aids in the latching of the ink container 12 to the receiving station 14 as well as aiding the removal of the ink container 12 from the receiving station as will be discussed with respect to Figs. 10 and 11.

Figs. 6a, 6b, 6c, and 6d show front plan, side plan, back plan, and bottom plan views, respectively, of the replaceable ink container 12 of the present invention. As shown in Fig. 6a, the replaceable ink container 12 includes a pair of outwardly projecting guide rail engagement features 40. In the preferred embodiment, each of these guide rail engagement features 40 extend outwardly in a direction orthogonal to upright side 70 of the replaceable ink container 12. The engagement features 42 extend outwardly from a front surface or leading edge 72 of the ink container 12. The engagement features 42 are disposed on either side of an electrical interface 74 and are disposed toward a bottom surface 76 of the replaceable ink container 12. The electrical interface 74 includes a plurality

AMENDED SHEET

Empf.zeit:28/02/2002 22:30 Empf.nr.:103 P.020

of electrical contacts 78, with each of the electrical contacts 78 electrically connected to an electrical storage device 80.

Opposite the leading end 72 is a trailing end 82 shown in Fig. 6c. The trailing end 82 of the replaceable ink container 12 includes the latch feature 30 having an engagement hook 54. The latch feature 30 is formed of a resilient material which allows the latch feature to extend outwardly from the trailing end thereby extending the engagement feature outwardly toward the corresponding engagement feature associated with the receiving station 14. As the latch member 30 is compressed inwardly toward the trailing end 82, the latch member exerts a biasing force outwardly in order to ensure the engagement feature 54 remains in engagement with the corresponding engagement feature 50 associated with the receiving station 14 to secure the ink container 12 into the receiving station 14.

The replaceable ink container 12 also includes keys 84 disposed on the trailing end of the replaceable ink container 12. The keys are preferably disposed on either side of the latch 30 toward the bottom surface 76 of the replaceable ink container 12. The keys 84, together with keying features 32 on the receiving station 14, interact to ensure the ink container 12 is inserted in the correct bay 56 and 58 in the receiving station 14. In addition, the keys 84 and the keying features 32 ensure that the replaceable ink container 12 contains ink that is compatible both in color and in chemistry or compatibility with the corresponding receiving bay 56 and 58 within the receiving station 14.

The handle portion 44 is disposed on a top surface 86 at the trailing edge 82 of the replaceable ink container 12. The handle portion 44 allows the ink container 12 to be grasped at the trailing edge 82 while inserted into the appropriate bay of the receiving station 14. Positioning the handle portion above apertures 88 tends to reduce the opportunity for the customer to get ink on their hands while inserting the ink container 12 into the receiving station 14. In addition, the handle portion 44 is disposed on the reservoir 34 opposite the electrical contacts 78 to reduce or eliminate handling of the electrical contacts 78 during insertion of the ink container 12 into the receiving station 14. This handling by a human hand can contaminate the electrical contacts.

Contamination of the electrical contact with salts and oils frequently found in human skin can result in an unreliable or high resistance electrical connection between the ink container 12 and the printer portion 18.

The ink container 12 includes apertures 88 disposed on the bottom surface 76 of the replaceable ink container 12. The apertures 88 allow the fluid interconnect 36 to extend through the reservoir 34 to engage the capillary member disposed therein. In the case of the tri-color replaceable ink container 12, there are three fluid outlets 88, with each fluid outlet corresponding to a different ink color. In the case of the tri-color chamber, each of three fluid interconnects 36 extend into each of the fluid outlets 88 to provide fluid communication between each ink chamber and the corresponding print head for that ink color.

Fig. 7 is a perspective view of a monochrome ink container positioned for insertion into the monochrome bay 56 in the receiving station 14 shown in Fig. 5. The monochrome ink container shown in Fig. 7 is similar to the tri-color ink container shown in Figs. 6a through 6d except that only a single fluid outlet 88 is provided in the bottom surface 76. The monochrome replaceable ink container 12 contains a single ink color and therefore receives only a single corresponding fluid interconnect 36 for providing ink from the ink container 12 to the corresponding printhead.

Fig. 8 is a greatly enlarged view of the electrical storage device 80 and electrical contacts 78. In one preferred embodiment, the electrical storage device 80 and the electrical contacts are mounted on a substrate 85. Each of the electrical contacts 78 is electrically connected to the electrical storage device 80. Each of the electrical contacts 78 is electrically isolated from each other by the substrate 85. In one preferred embodiment, the electrical storage device 80 is a semiconductor memory that is mounted to the substrate 85. In the preferred embodiment, the substrate 85 is adhesively bonded to the ink container 12.

In one preferred embodiment, there are four electrical contacts 78 representing contacts for power and ground connections as well as clock and data connections. Insertion of the replaceable ink container 12 into the printing portion 18 establishes electrical connection between the electrical contacts 64 on

AMENDED SHEET

Empf.zeit:28/02/2002 22:30 Empf.nr.. 165 P.022

the receiving station 14 and the electrical contacts 78 on the replaceable ink container 12. With power and ground applied to the electrical storage device 80, data is transferred between the printing portion 18 and the replaceable ink container 12 at a rate established by the clock signal. It is critical that electrical connection between the printer portion 18 and the replaceable ink container 12 formed by electrical contacts 64 and 78, respectively, be low resistance connections to ensure reliable data transfer. If the electrical contacts 64 and 78 fail to provide a low resistance connection, then data may not be properly transferred, or the data may be corrupted or inaccurate. Therefore, it is critical that a reliable, low resistance connection is made between the ink container 12 and the printing portion 18 to ensure proper operation of the printing system 10.

Fig. 9a, 9b, and 9c is a sequence of figures to illustrate the technique of the present invention for inserting the replaceable ink container 12 into the receiving station 14 to form reliable electrical and fluidic connections with the receiving station 14.

Fig. 9a shows the ink container 12 partially inserted into the receiving station 14. In the preferred embodiment, the ink container 12 is inserted into the receiving station 14 by grasping the handle portion 44 and inserting the ink container into the receiving station with the leading edge or leading face 72 first. As the leading edge 72 enters the receiving station 14 the outwardly extending guide members 40 on the ink container engage each of the pair of guide rails 46. The guide rails 46 guide the ink container 12 in a horizontal or linear motion toward the back wall 66 of the receiving station 14. The guide rails 46 then guide the replaceable ink container in both a horizontal direction toward the back wall 66 and a vertical direction toward the bottom surface of the receiving station 14 such that the engagement feature 42 on the ink container 12 is received by a corresponding engagement feature 48 on the back wall 66 of the receiving station 14 as shown in Fig. 9b. The insertion of the ink container 12 requires only an insertion force to urge the ink container linearly along the guide rail 46. The gravitational force acting on the ink container 12 tends to cause the ink container to follow the guide rails 46 as the guide rails extend in a downward direction to allow engagement of engagement features 42 and 48. The guide rail engagement

AMENDED SHEET

features 40 are preferably gently rounded surfaces to slide freely along the guide rails 46.

Fig. 9b shows the ink container 12 inserted into the receiving station 14 such that the engagement feature 42 is in engagement with the engagement feature 48 associated with the receiving station 14. A downward force is applied to the ink container 12 as represented by arrows 90 to compress the leaf spring 52 and to urge the trailing end 82 of the ink container 12 downwardly toward the bottom surface 68 of the receiving station 14. The keys 84 must properly correspond to the keying feature 32 on the receiving station 14. If the keys 84 on the ink container 12 do not correspond to the keying features 32, the keying system will prevent further insertion of the ink container 12 into the receiving station 14. This keying system made up of keys 84 and the keying features 32 prevent ink containers that are not compatible with the receiving station 14 from further insertion into the receiving station 14. Further insertion of the ink container 12 into the receiving station 14 could result in contact of the fluid interconnect 36 with the capillary member within the ink container 12, thereby contaminating the fluid interconnect 36 with incompatible ink. Incompatible ink mixing in the fluid interconnect 36 can result in precipitation which can damage the printhead 16. In addition to inks of incompatible chemistries, the ink container can have an incompatible color which can result in color mixing, thereby reducing the output print quality.

The keys 84 on the ink container 12 and the keying features 32 on the receiving station 14 allow for the complete insertion of the proper ink container 12 into the proper receiving station 14. The downward force applied to the trailing end 82 of the ink container 12 causes the ink container 12 to pivot about a pivot axis compressing the leaf spring 52, thereby moving the trailing edge 82 of the ink container 12 toward the bottom surface 68 of the receiving station 14. As the ink container 12 is urged downward into the receiving station 14, the resilient latch 30 is compressed slightly inward toward the trailing edge 82 of the ink container 12. Once the ink container 12 is urged downward sufficiently far, the engagement feature 54 on the latch 30 engages with a corresponding

engagement feature 50 on the receiving station 14 to secure the ink container 12 to the receiving station 14 as shown in Fig. 9c.

With the ink container 12 properly secured in the receiving station 14 as shown in Fig. 9c the fluid interconnect 36 extends into the reservoir 34 to compress the capillary member, thereby forming a region of increased capillarity adjacent the fluid interconnect 36. This region of increased capillarity tends to draw ink toward the fluid interconnect 36, thereby allowing ink to flow through the fluid interconnect 36 to the printhead 16. In the preferred embodiment, the ink container 12 when inserted into the receiving station 14 is oriented in a gravitational frame of reference so that a gravitational force acts on ink within the ink container 12 tending to draw ink toward the bottom surface 76 of the ink container 12. Thus ink within the ink container 12 is drawn to the bottom surface 76 where this ink is drawn toward the fluid interconnect 36 by capillary attraction thereby tending to reduce or minimize stranding of ink within the ink container 12.

Fig. 10 is a simplified representation shown greatly enlarged and broken away of the ink container 12 properly positioned in the receiving station 14. The ink container 12 is shown with a capillary storage member 86 disposed therein. The ink container 12 is configured so that when inserted into the receiving station 14, the fluid interconnect 36 is received through the fluid outlet 88 to compress the capillary storage member 86 in a region adjacent the fluid interconnect 36. In the preferred embodiment, the fluid interconnect 36 is a hollow cylindrical ink pipe that allows ink within the capillary storage member 86 to pass from the ink container 12 to the printhead 16 through the hollow ink pipe 36.

Fig. 11 is a simplified top plan view of the ink container 12 installed within the receiving station 14. Fig. 11 is intended to illustrate how electrical interconnection between the ink container 12 and receiving station 14 is achieved and is not drawn to scale. In the preferred embodiment, the receiving station 14 includes the electrical interconnect 62 having a plurality of spring-loaded electrical contacts 64.

The ink container 12 includes a plurality of electrical contacts 78 disposed thereon. The ink container 12 is configured such that when inserted into the receiving station 14, each of the plurality of electrical contacts 78 engages each of the plurality of spring-biased electrical contacts 64 on the receiving station 14. The electrical contacts 64 are slightly compressed so that each of the electrical contacts are biased against each of the electrical contacts 78 associated with the ink container such that a reliable electrical interconnection is established between the ink container 12 and the receiving station 14. This electrical interconnection between the ink container 12 and the receiving station 14 allows information to be transferred between the electrical storage device 80 disposed on the ink container 12 and the controller 29 disposed in the printer portion 18 shown in Fig. 2.

Figs 12a and 12b illustrate a position in the insertion process described with respect to Figs. 9a, 9b and 9c wherein the leading edge 72 of the ink container 12 is positioned over the fluid interconnect 36. Fig. 12a depicts a side view with Fig. 12b showing an end view. It can be seen from Figs. 12a and 12b that the guide feature 40 must be positioned on the ink container 12 low enough toward the bottom surface 76 of the ink container 12 such that the leading edge 72 of the ink container does not collide the fluid interconnect 36 during insertion. Another constraint on the positioning of the guide member 40 is that the guide member 40 must be positioned sufficiently close to the top surface 86 of the ink container 12 to insure that the engagement feature 42 properly engages with the corresponding engagement feature 42 on the receiving station 14.

In addition, the outwardly extending guide members 40 on the ink container must extend outward sufficiently far to engage the guide rails 46. However, the outwardly extending guide members 40 should not extend too far outward such that the guide members 40 engage the upright sides in the receiving station 14, producing interference which produces friction and binding which resists insertion of the ink container 12 into the receiving station 14.

Figs. 13a, 13b, and 13c illustrate the technique for removing the ink container 12 from the receiving station 14. The technique for removing the ink container 12 of the present invention begins with the release of the engagement

feature from the corresponding engagement feature 50 on the receiving station 14 by urging the latch 30 toward the trailing surface 82. Once the trailing edge of the ink container 12 is released, the spring 52 urges the trailing edge of the ink container upward as shown in Fig. 13b. The ink container 12 can be grasped by handle 44 to retrieve the ink container 12 in a direction opposite the insertion direction. As the ink container 12 is withdrawn from the receiving station 14, the guide member 40 follows the guide rails 46 to lift the ink container, thereby preventing interference between the fluid interconnect 36 and the fluid outlet on the bottom surface of the ink container 12.

The ink container 12 of the present invention is configured to engage and interact with the receiving station 14 to guide the ink container 12 into the receiving station and for forming a reliable fluid and electrical connection with the receiving station 14. The technique of the present invention allows this insertion process to be relatively simple and easy to prevent improper insertion of the ink container 12. The customer grasps the ink container 12 by the handle portion 44 and slides the ink container 12 horizontally into the receiving station 14. The guide rails 46 and guide features 40 cooperate to properly guide the ink container 12 into the receiving station 14. The ink container 12 is pressed downwardly to latch the ink container 12 and achieve operational interconnection both electrically and fluidically between the ink container 12 and the receiving station 14.

AMENDED SHEET

Empf.zeit:28/02/2002 20:00 Empf.nr.:103 P.026

What is claimed is:

1. A replaceable ink container for providing ink to an inkjet printing system, the inkjet printing system having a receiving station mounted to a scanning carriage, the receiving station having a fluid inlet and a plurality of electrical contacts electrically connected to a printing system control portion, the replaceable ink container comprising:

an ink reservoir having a leading end surface relative to a direction of insertion of the replaceable ink container into the receiving station, and a bottom end surface orthogonal to the leading end surface, the bottom end surface defining a fluid outlet configured for connection to the fluid inlet on the receiving station;

an electrical storage device coupled to the ink reservoir for storing information related to the replaceable ink container;

a plurality of electrical contacts mounted to the leading end surface and electrically connected to the electrical storage device, wherein each of the plurality of electrical contacts on the ink reservoir are configured to engage each of the plurality of electrical contacts on the receiving station to operably couple the electrical storage device with the printing system control portion; and

an engagement feature disposed on the leading end surface immediately adjacent to the bottom end surface, the engagement feature configured to engage a corresponding engagement feature on the receiving station to secure the leading end surface of the ink reservoir to the receiving station.

2. The replaceable ink container of claim 1 wherein the leading end surface of the ink reservoir is an upright side.

3. The replaceable ink container of claim 1 or 2 further including a capillary storage material disposed within the ink reservoir, the capillary storage material having an uncompressed state, when the replaceable ink container is not installed in the receiving station, and a compressed state when the replaceable ink container is installed in the receiving station to provide a region of increased capillarity in the capillary storage material adjacent the fluid outlet.

4. The replaceable ink container of any one of claims 1 to 3 wherein the plurality of electrical contacts are four electrical contacts, the four electrical contacts including a pair of contacts for providing a supply voltage therebetween and a pair of contacts for providing control and data signals relative to a common reference.

5. The replaceable ink container of any one of claims 1 to 4 wherein the electrical storage device is a semiconductor memory device.

6. The replaceable ink container of any one of claims 1 to 5 wherein the ink reservoir includes guide features such that insertion of the replaceable ink container into the receiving station causes the ink reservoir to move first in a linear direction toward a backwall of the receiving station, and second in a direction toward a bottom wall of the receiving station.

7. A method for establishing electrical and fluidic connection between a replaceable ink container and a moving carriage mounted receiving station of an inkjet printing system, the method comprising:

urging the replaceable ink container toward a backwall of the receiving station to engage an engagement feature disposed on a leading end surface of the ink container immediately adjacent to a bottom surface of the

ink container with a corresponding engagement feature on the backwall, the backwall having at least one electrical contact disposed thereon; and

pivoting the replaceable ink container downward toward a bottom wall of the receiving station to operatively couple a fluid outlet on the bottom surface of the replaceable ink container with a fluid inlet proximate the bottom wall of the receiving station and to operatively couple the at least one electrical contact on the receiving station with at least one electrical contact on the leading end surface of the replaceable ink container that is orthogonal to the bottom surface to establish both electrical and fluid connections between the replaceable ink container and the receiving station, the at least one electrical contact of the replaceable ink container being electrically coupled to an electrical storage device for storing information related to the replaceable ink container.

8. The method for establishing electrical and fluidic connection of claim 7 further including:

providing ink from the replaceable ink container to the receiving station.

9. The method for establishing electrical and fluidic connection of claim 7 wherein the replaceable ink container includes a capillary storage material disposed therein and wherein pivoting the replaceable ink container downward toward the bottom wall of the receiving station positions the replaceable ink container on the fluid inlet to compress the capillary storage material producing a region of increased capillarity adjacent the fluid inlet.

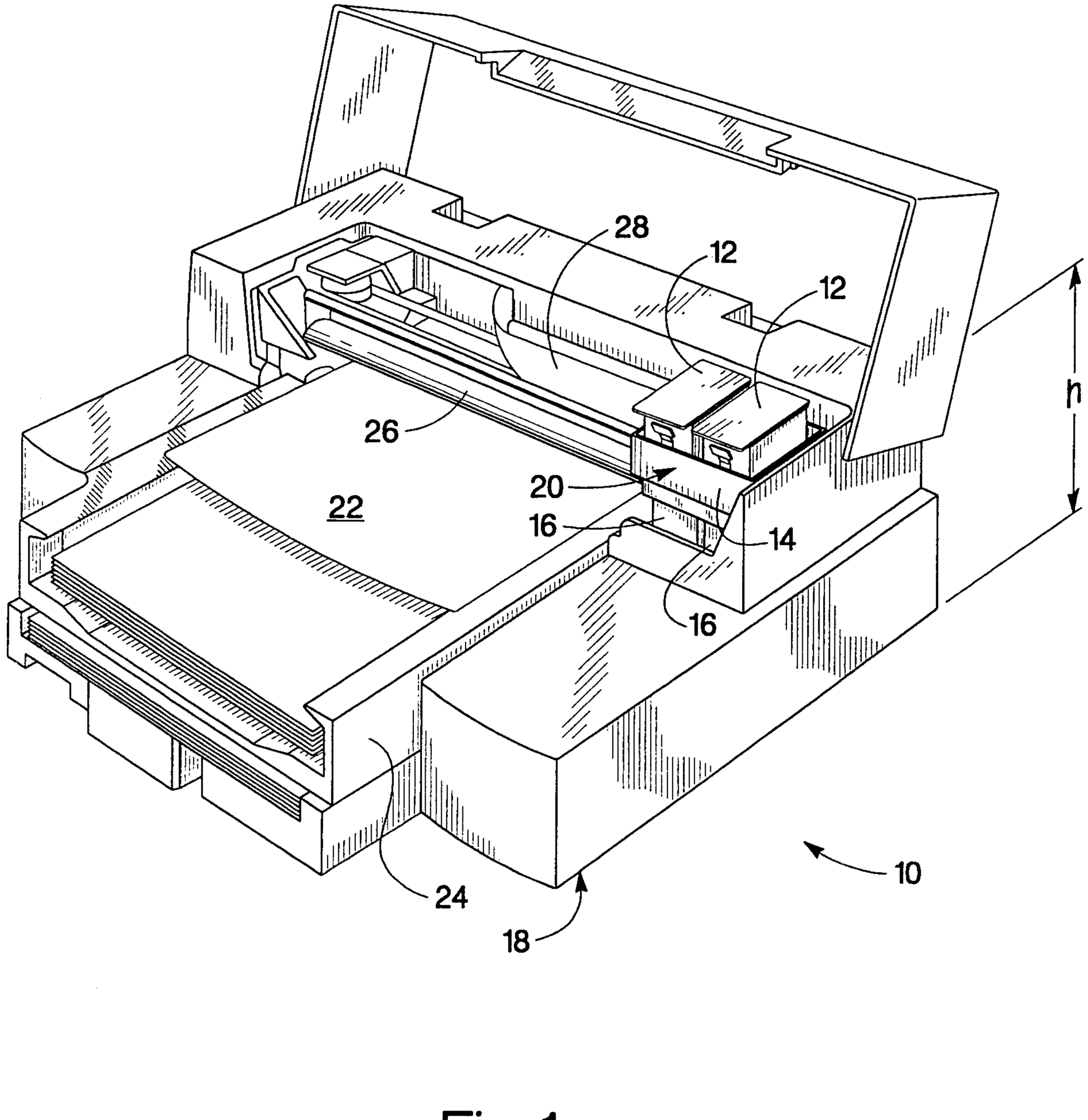

Fig. 1

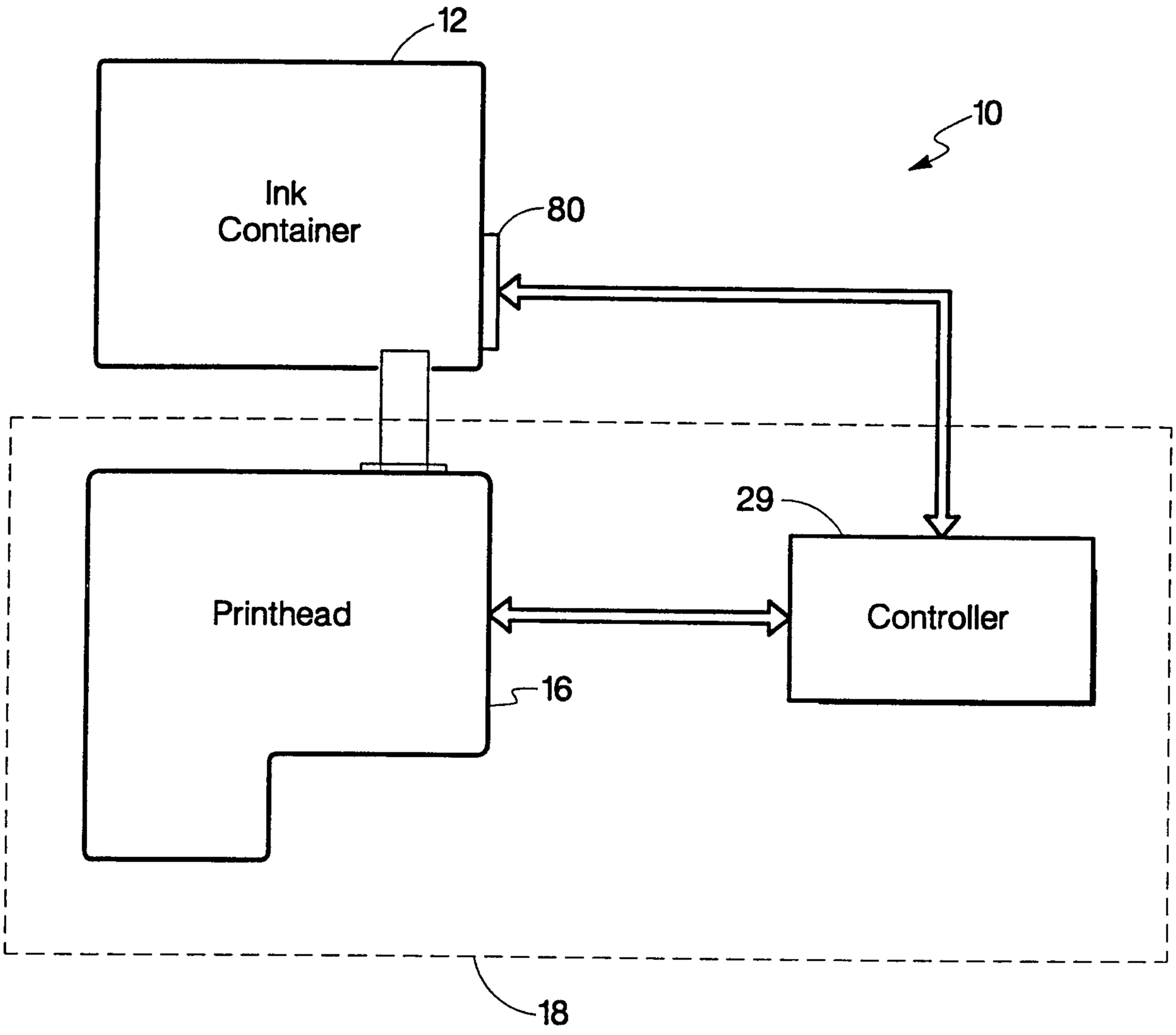

Fig. 2

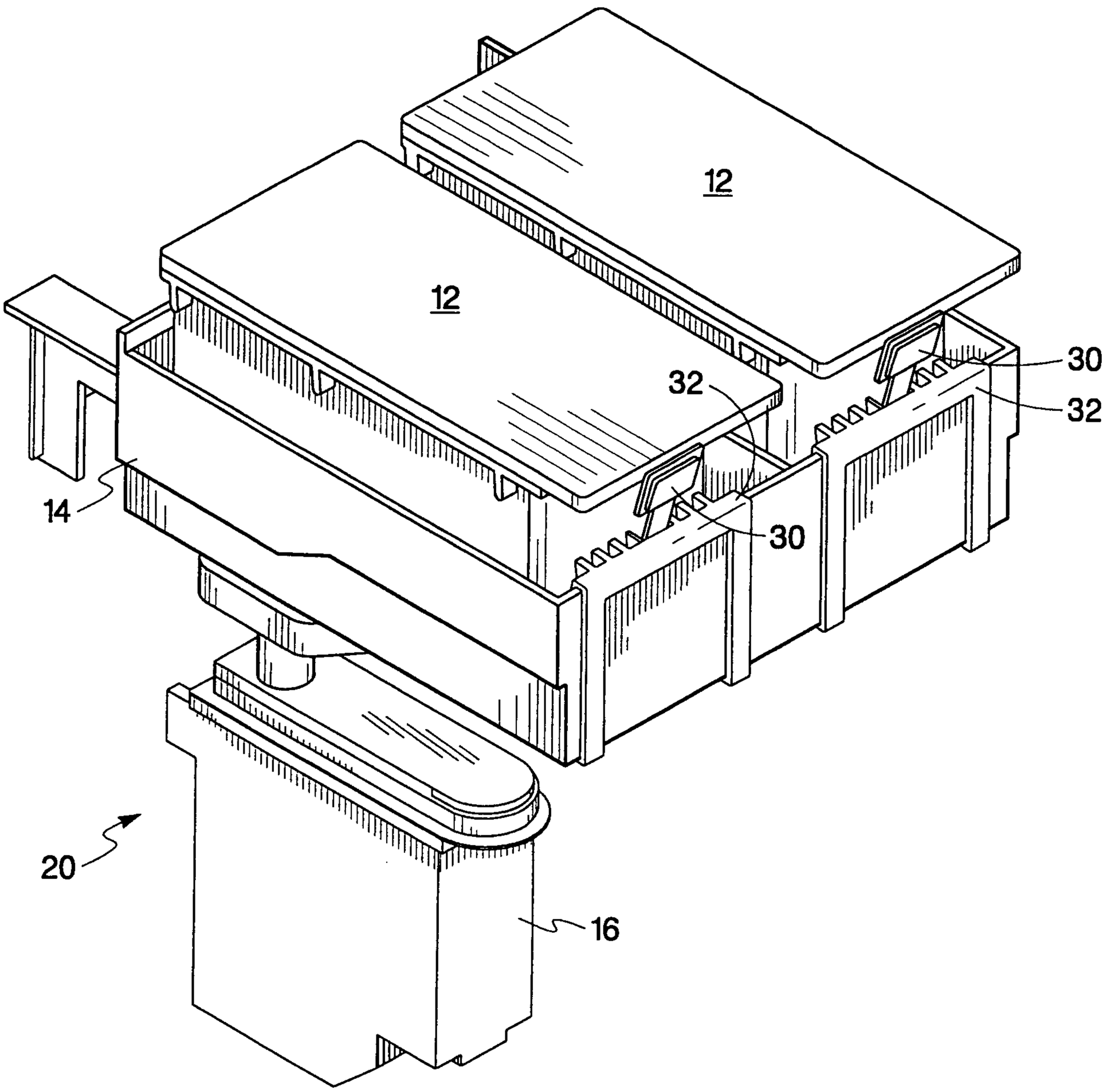

Fig. 3

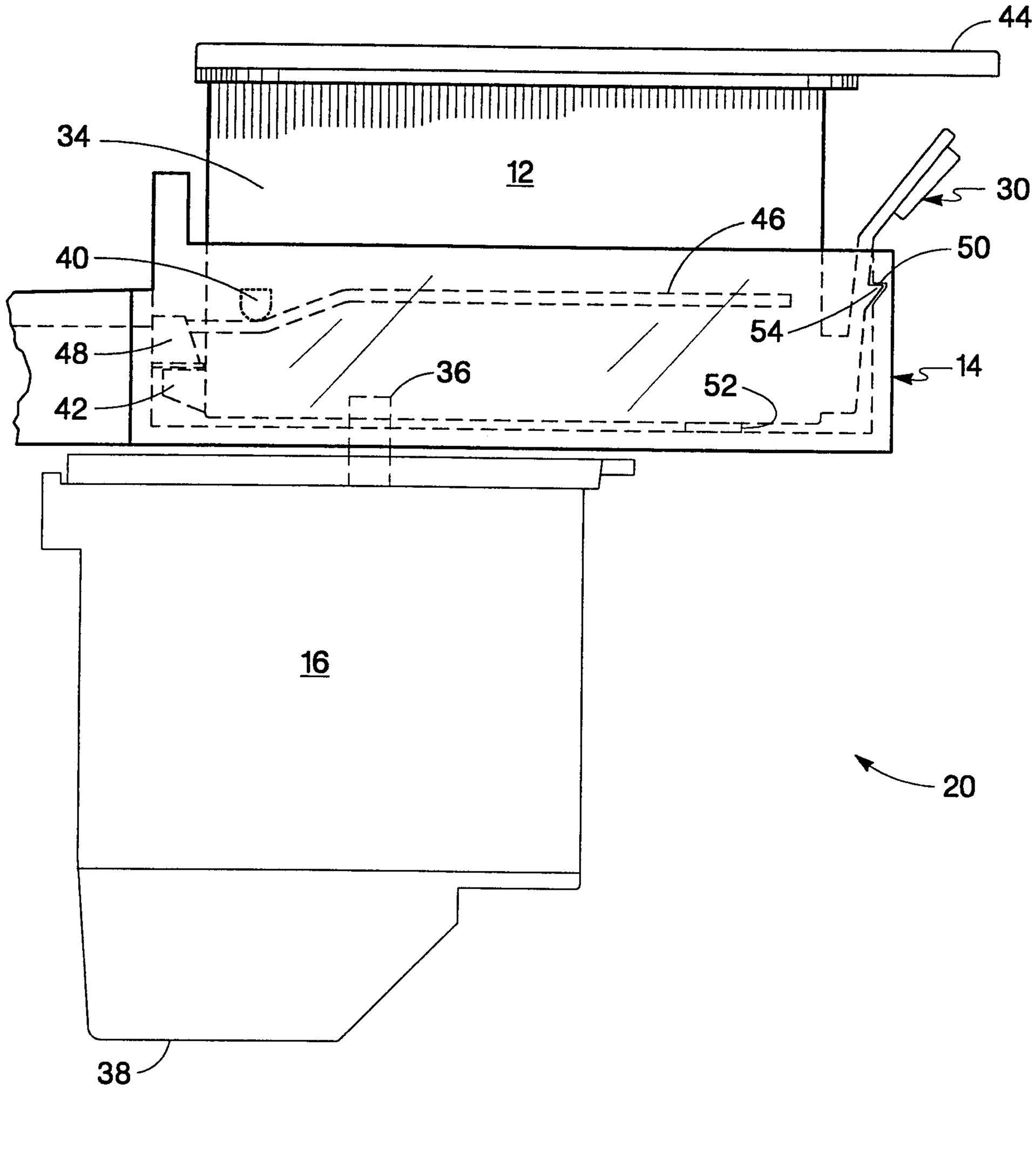

Fig. 4

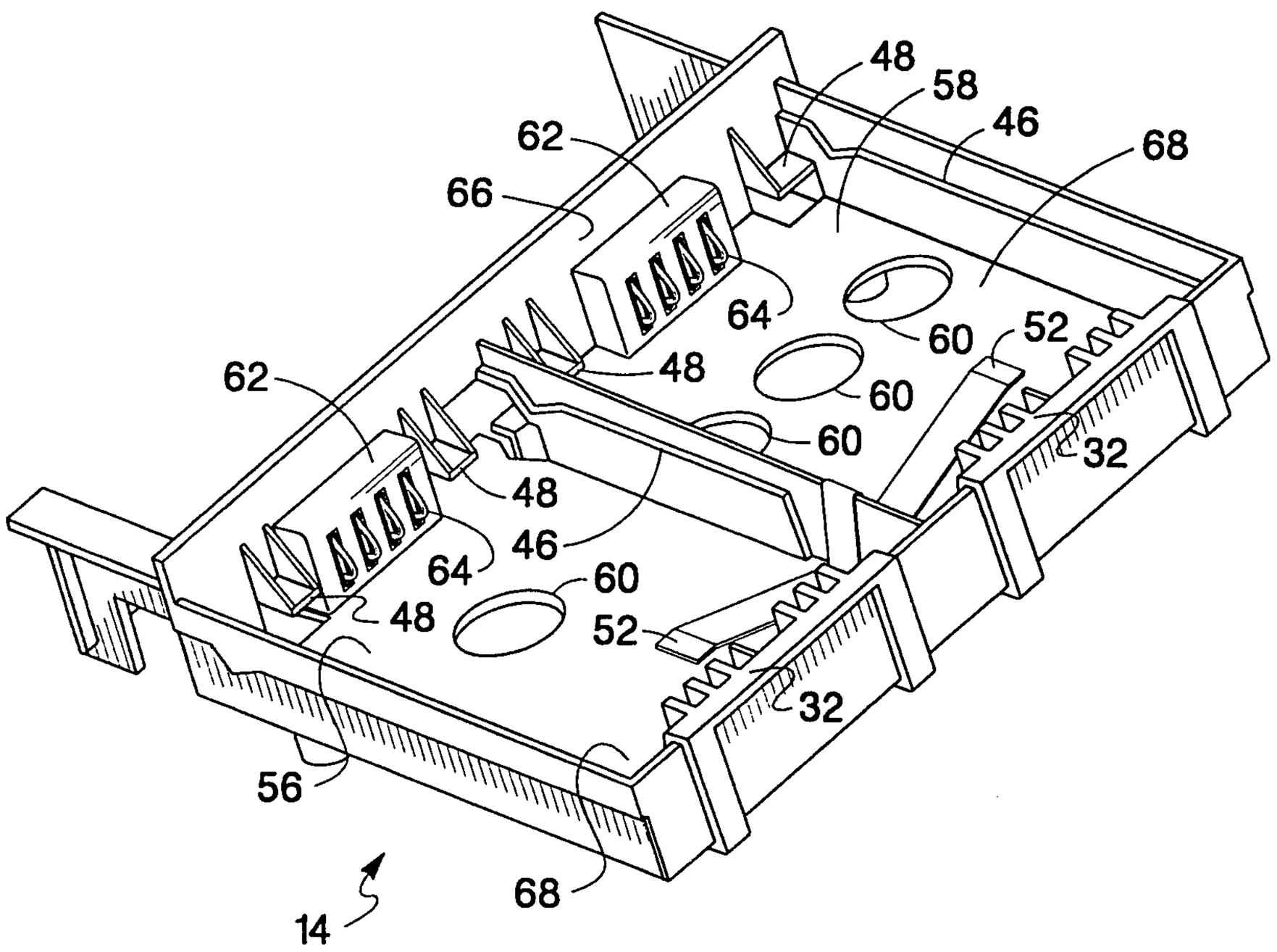

Fig. 5

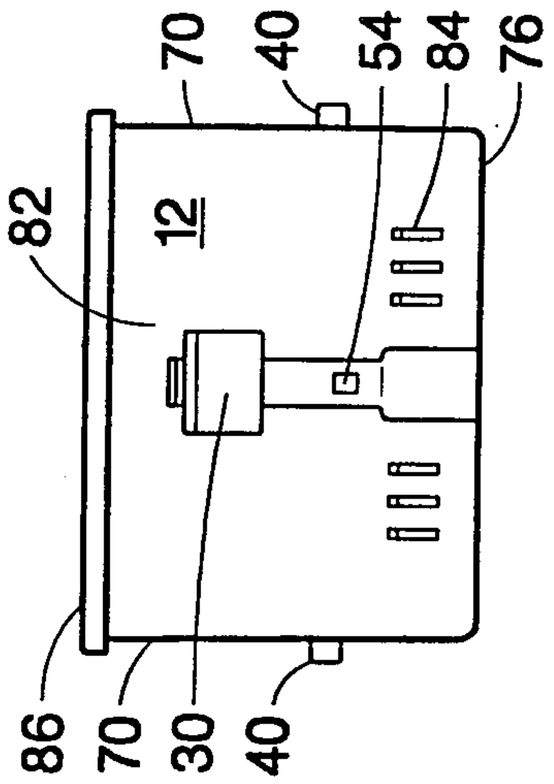

Fig. 6c

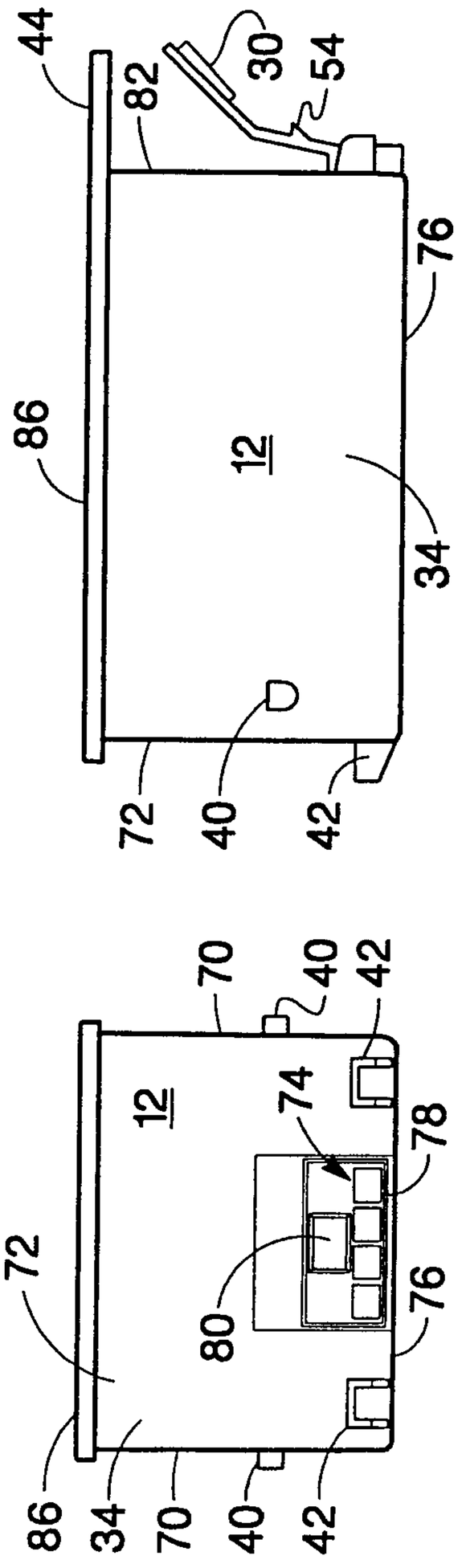

Fig. 6b

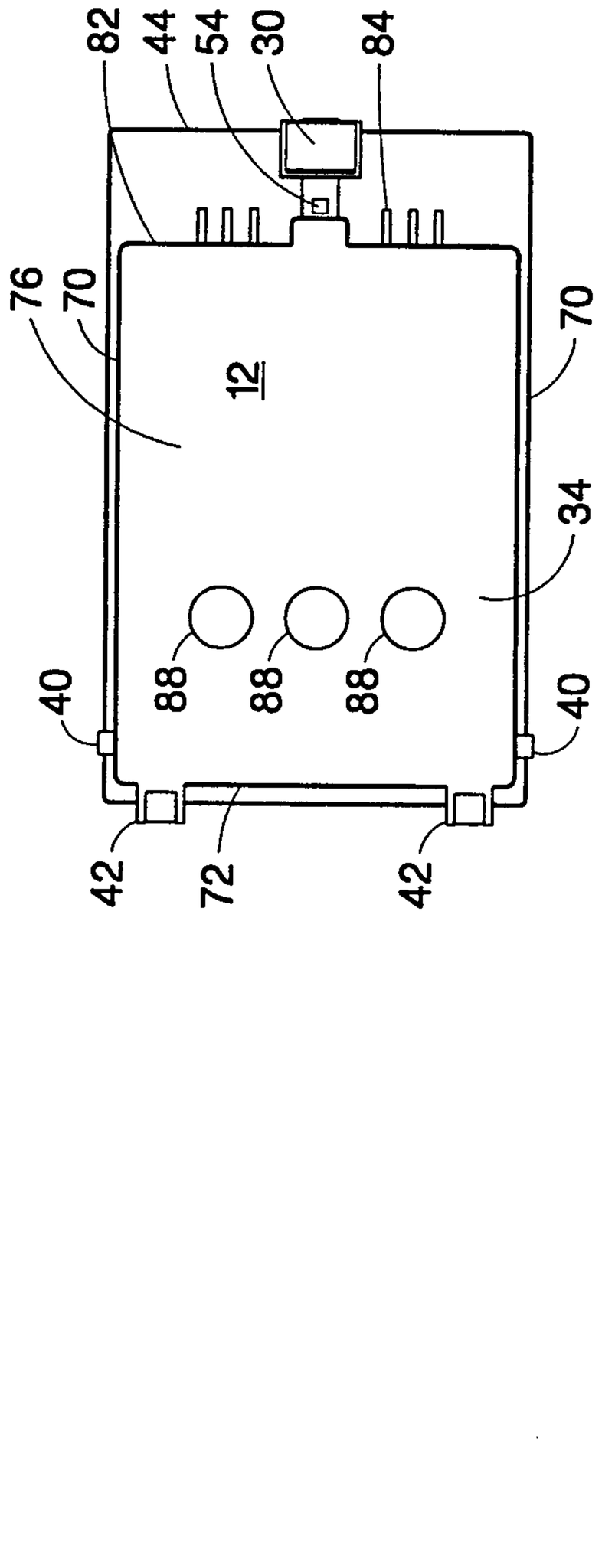

Fig. 6d

Fig. 6a

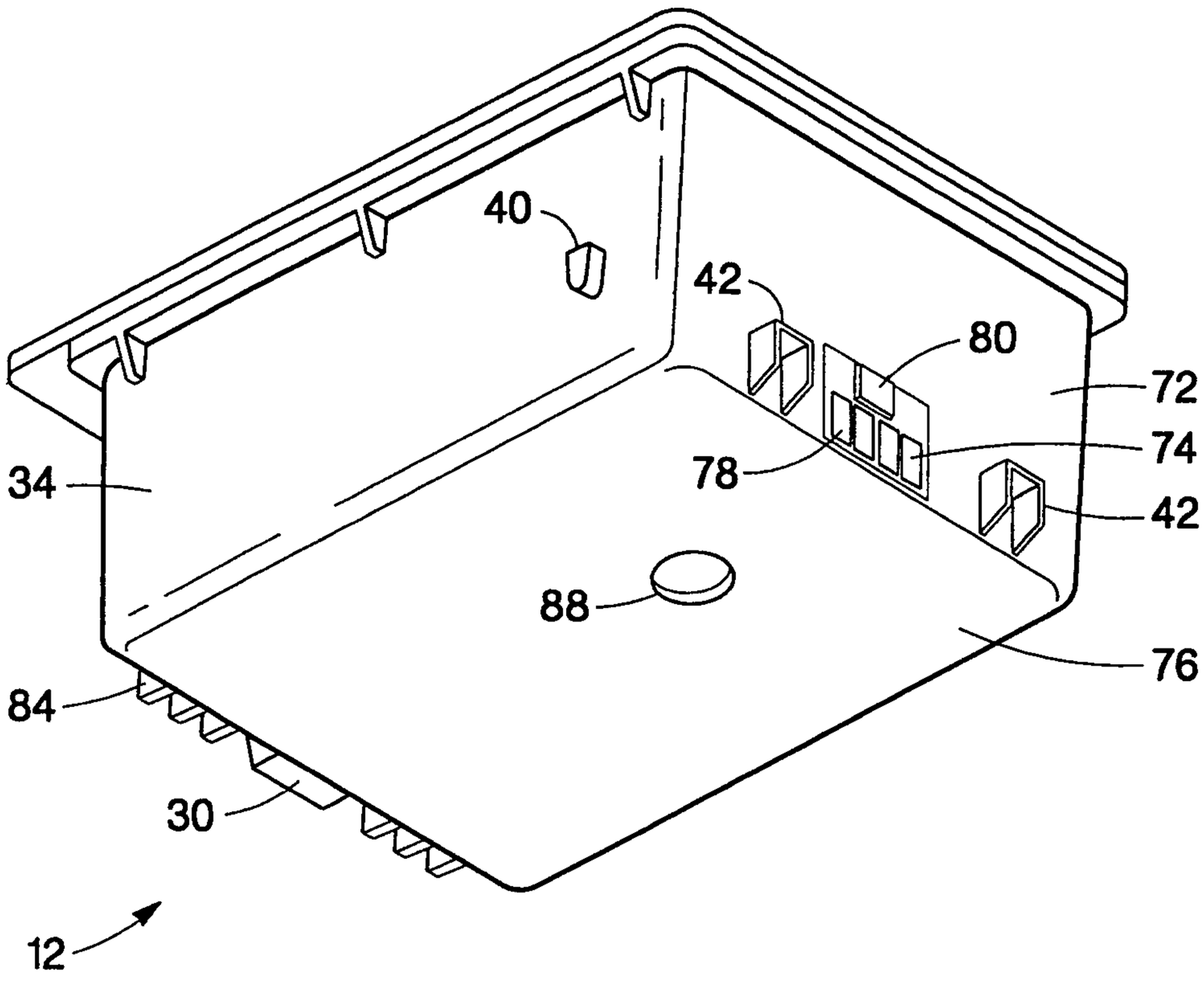

Fig. 7

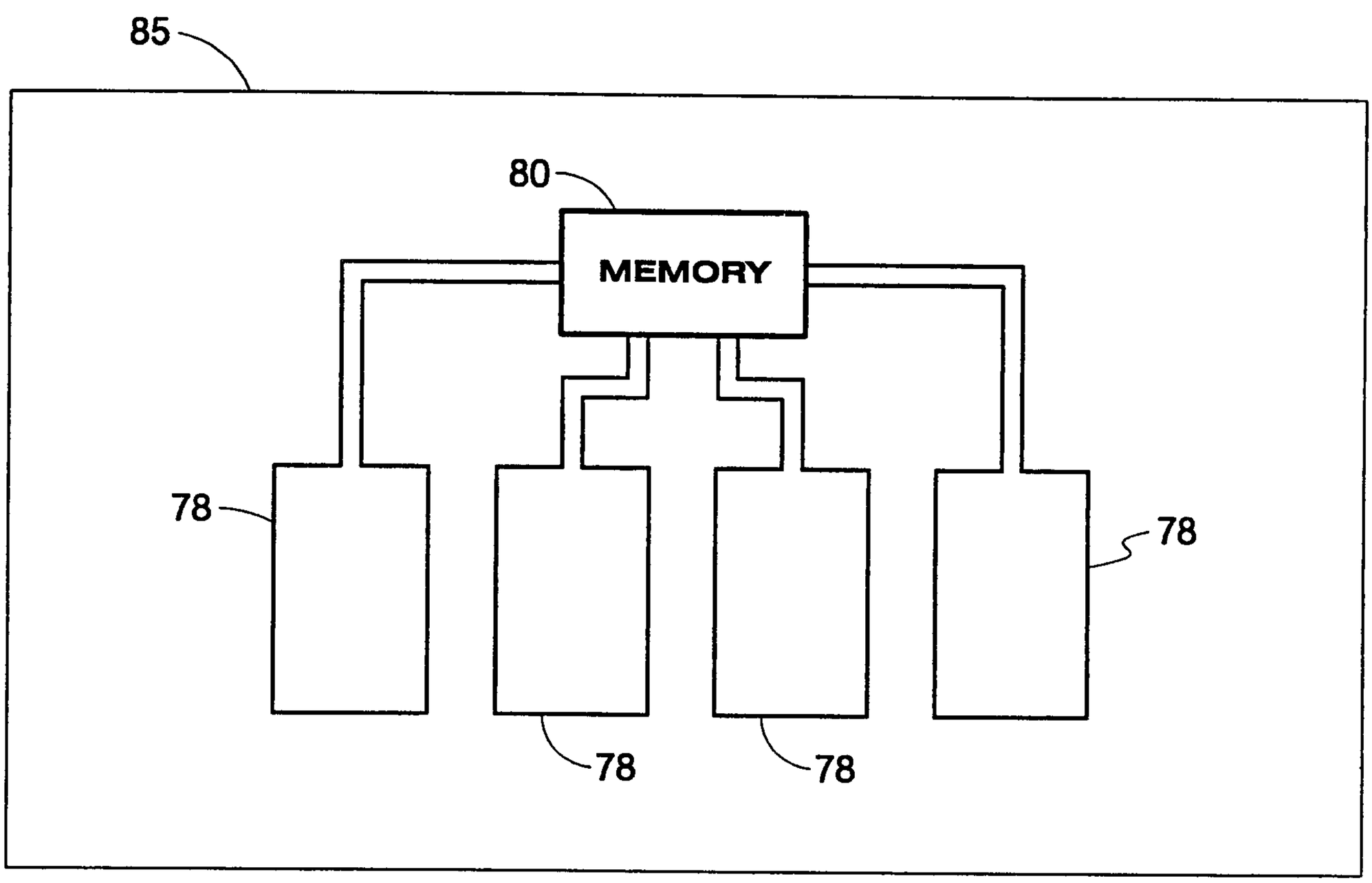

Fig. 8

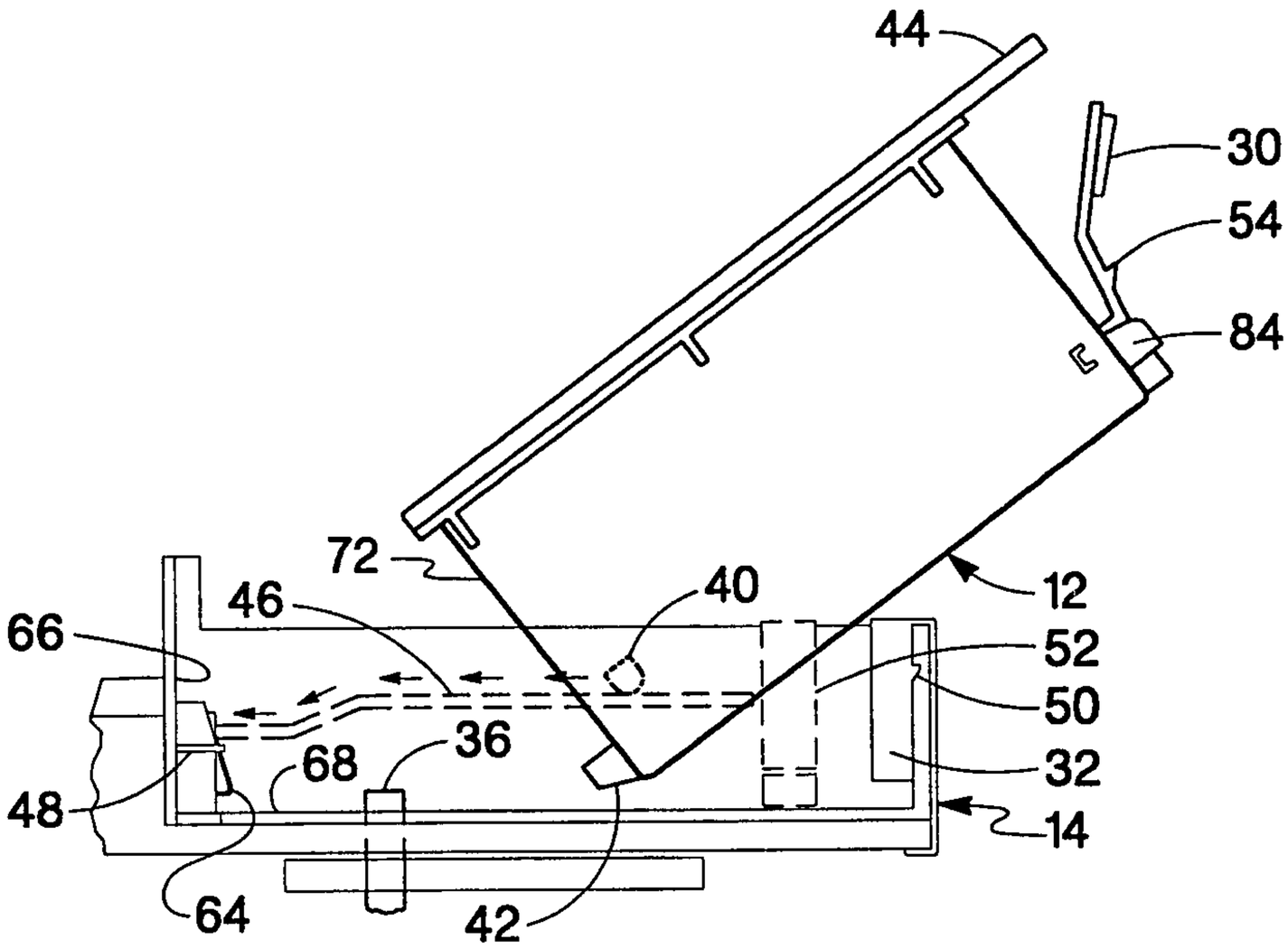

Fig. 9a

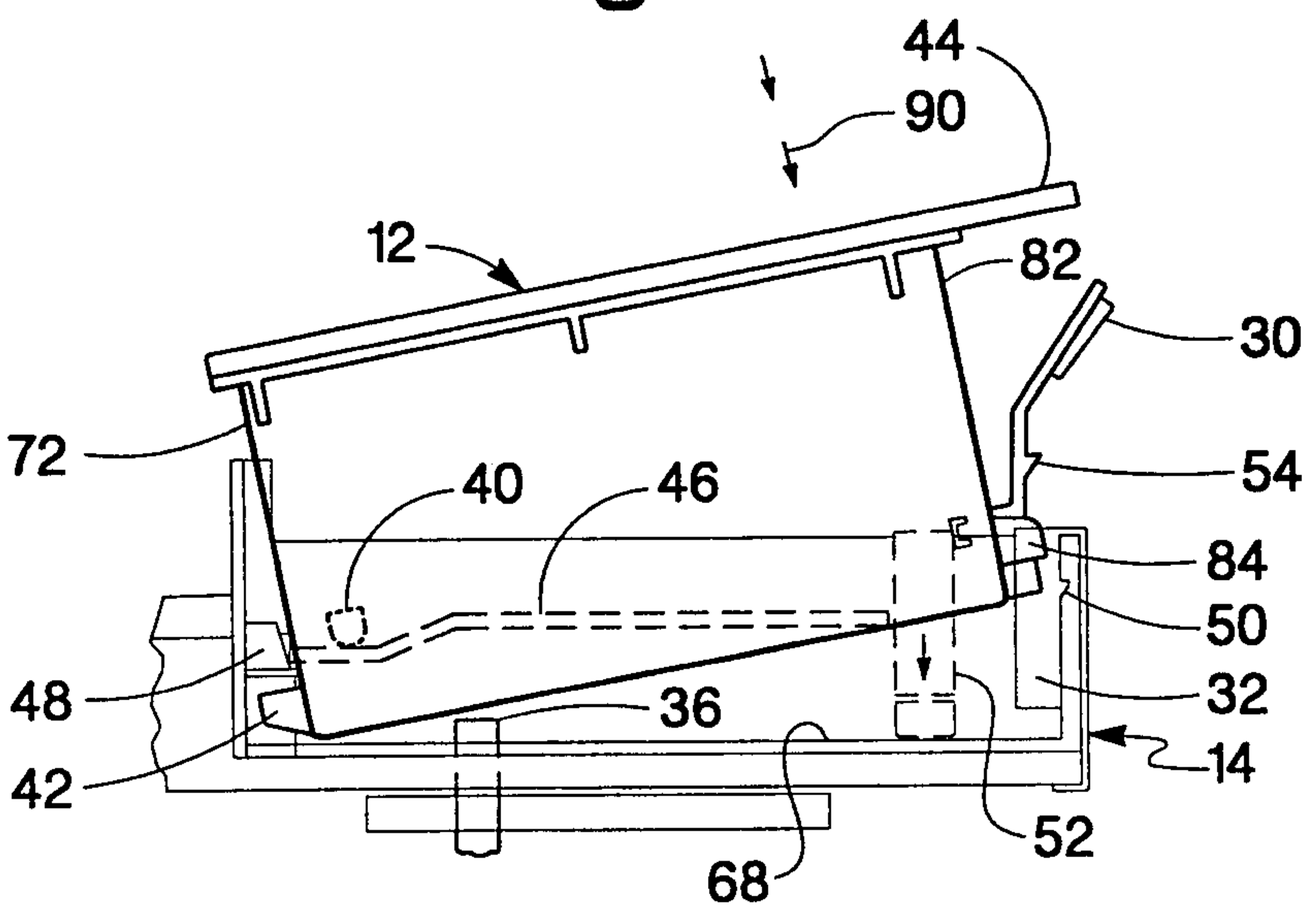

Fig. 9b

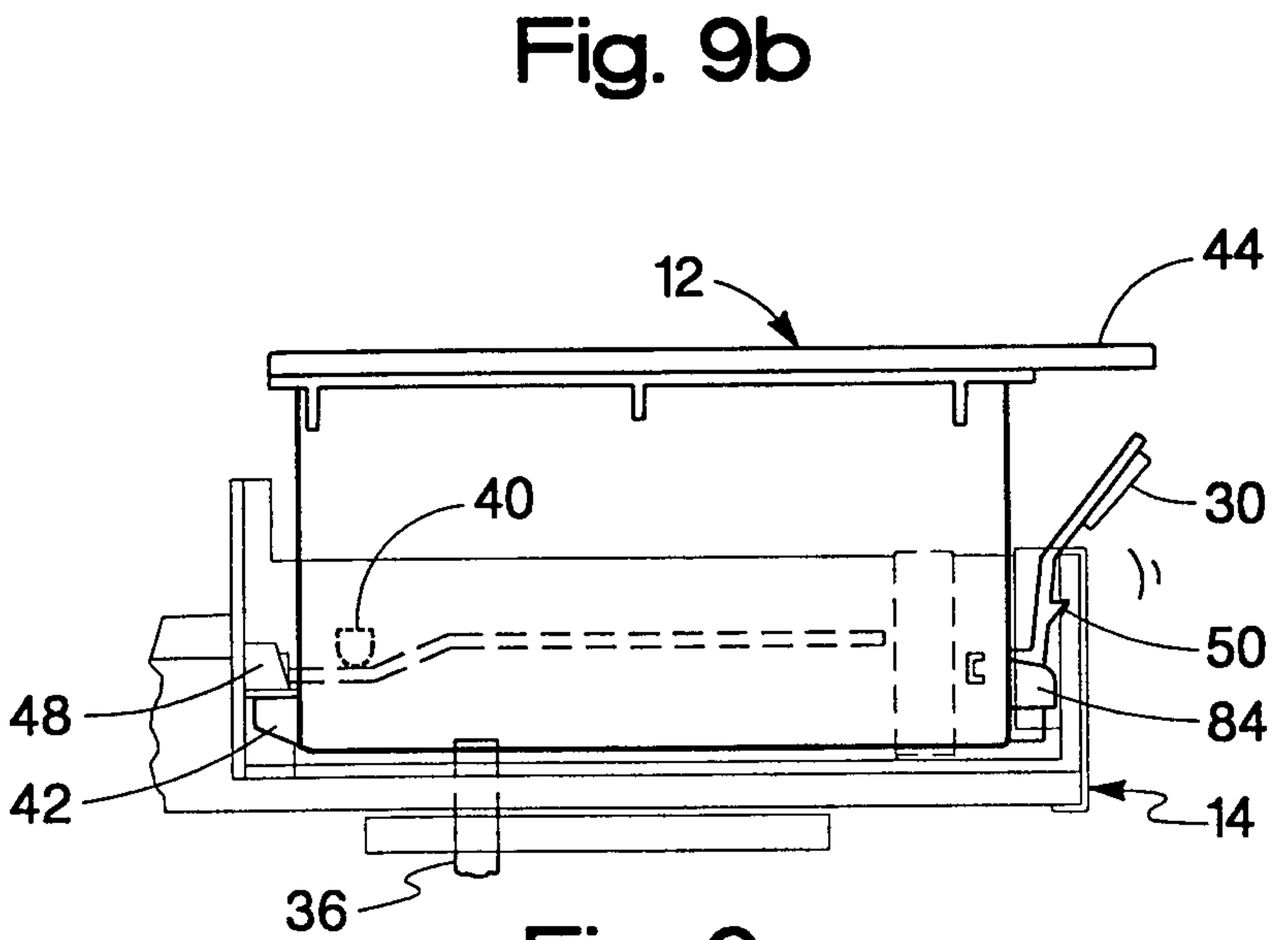

Fig. 9c

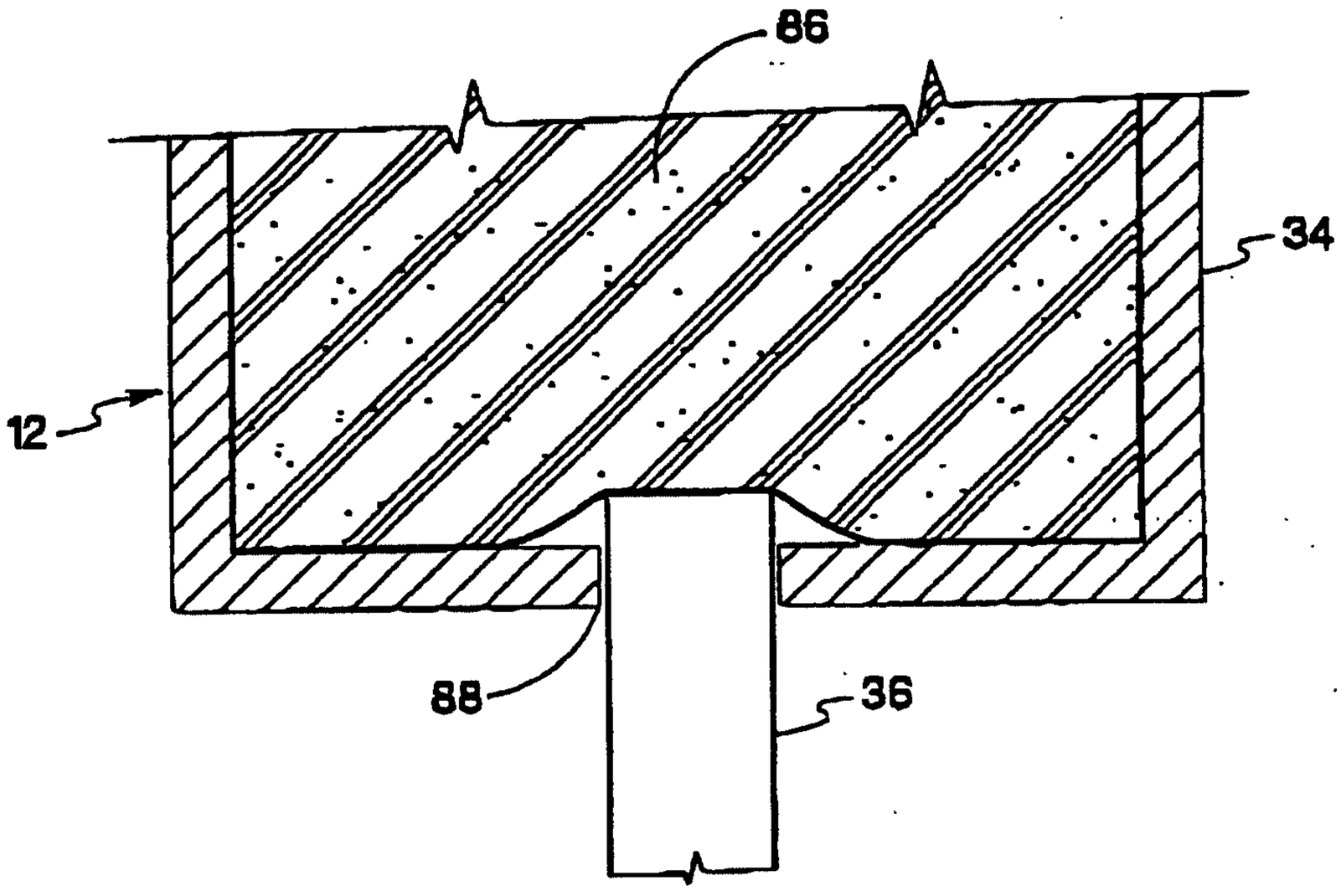

Fig. 10

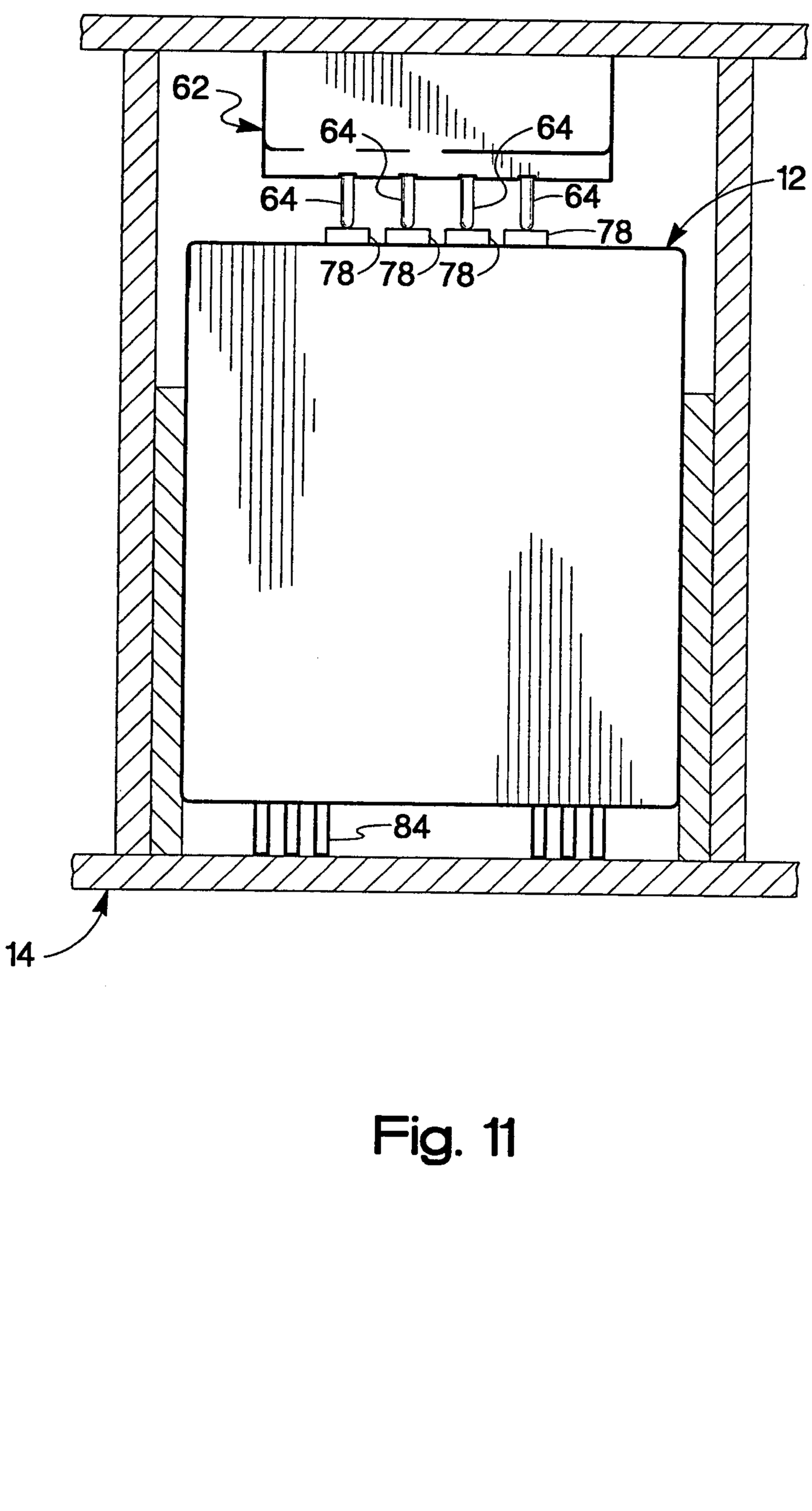

Fig. 11

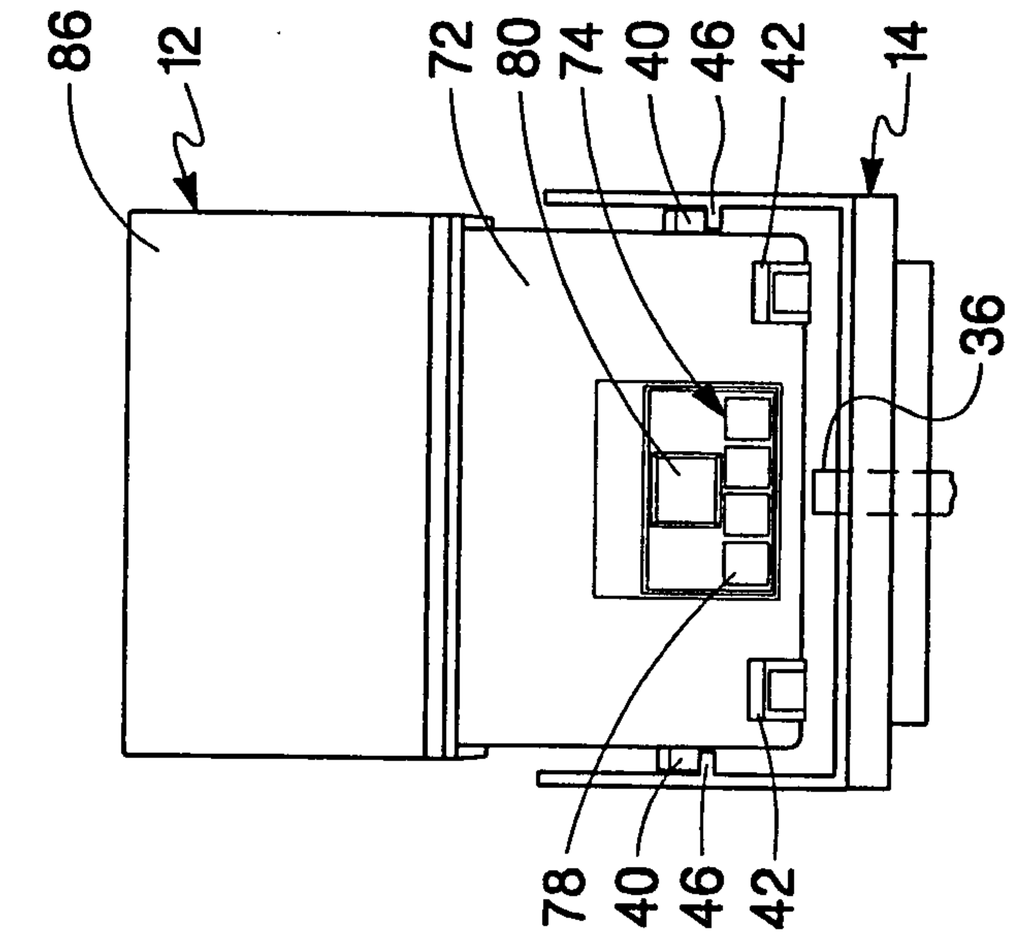

Fig. 12b

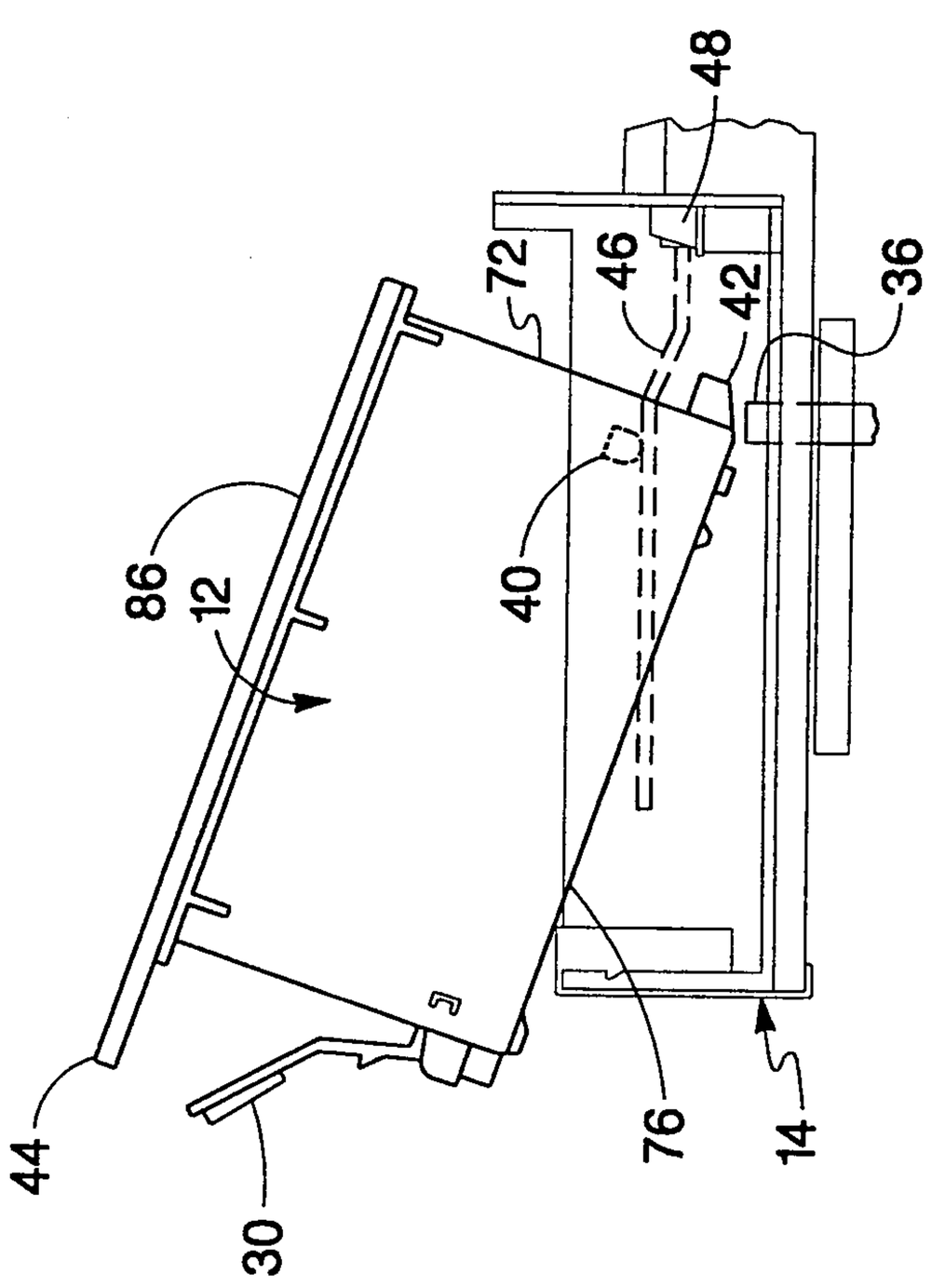

Fig. 12a

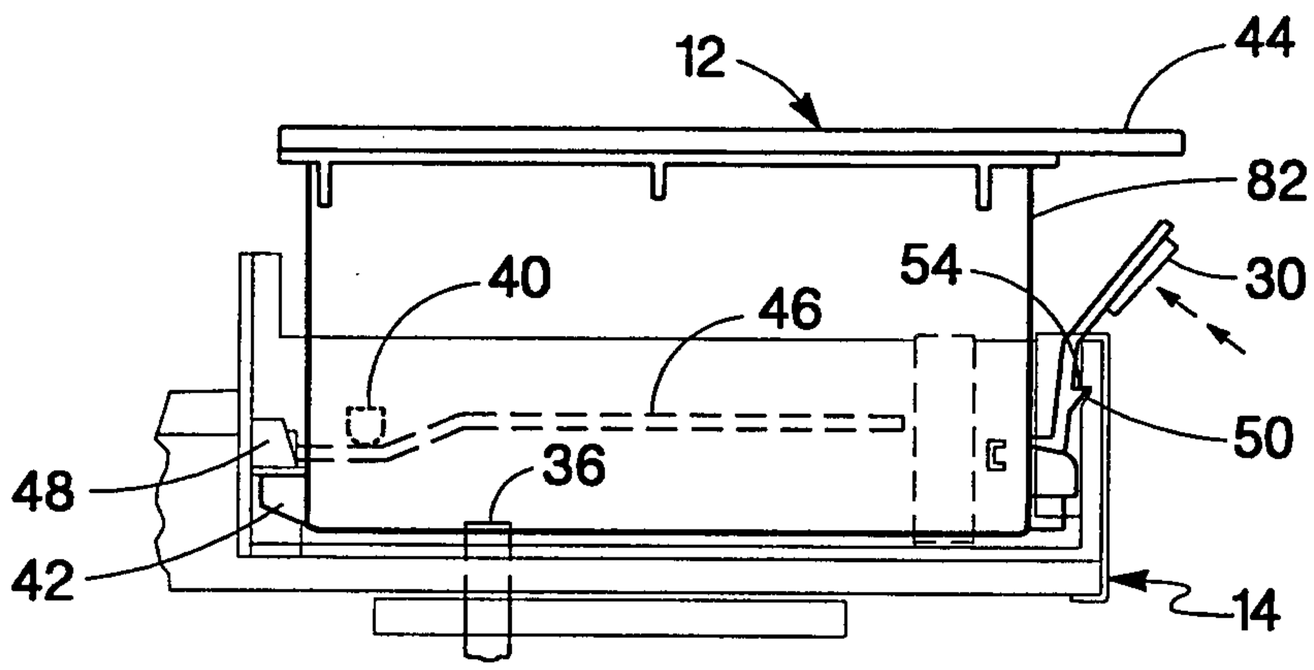

Fig. 13a

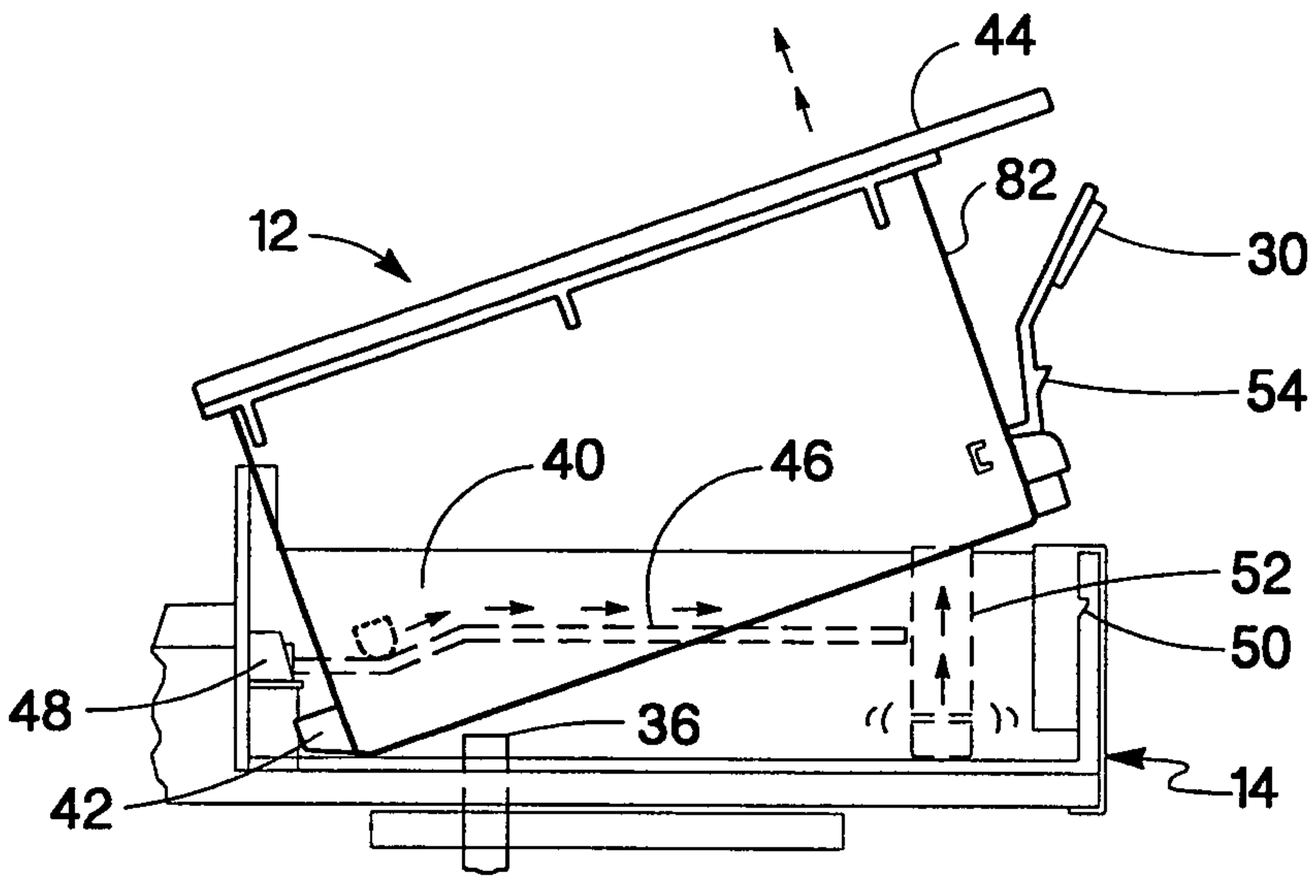

Fig. 13b

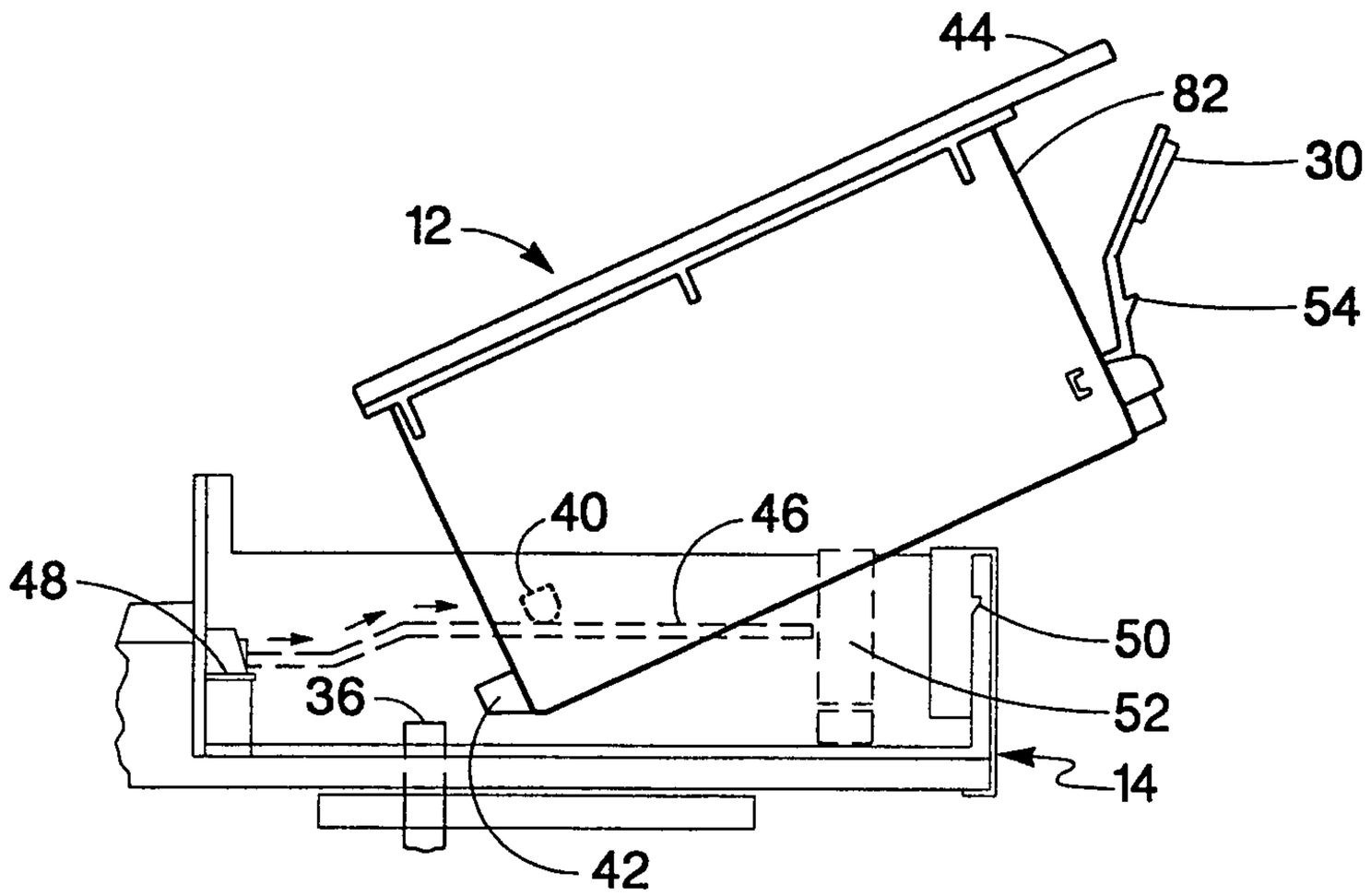

Fig. 13c

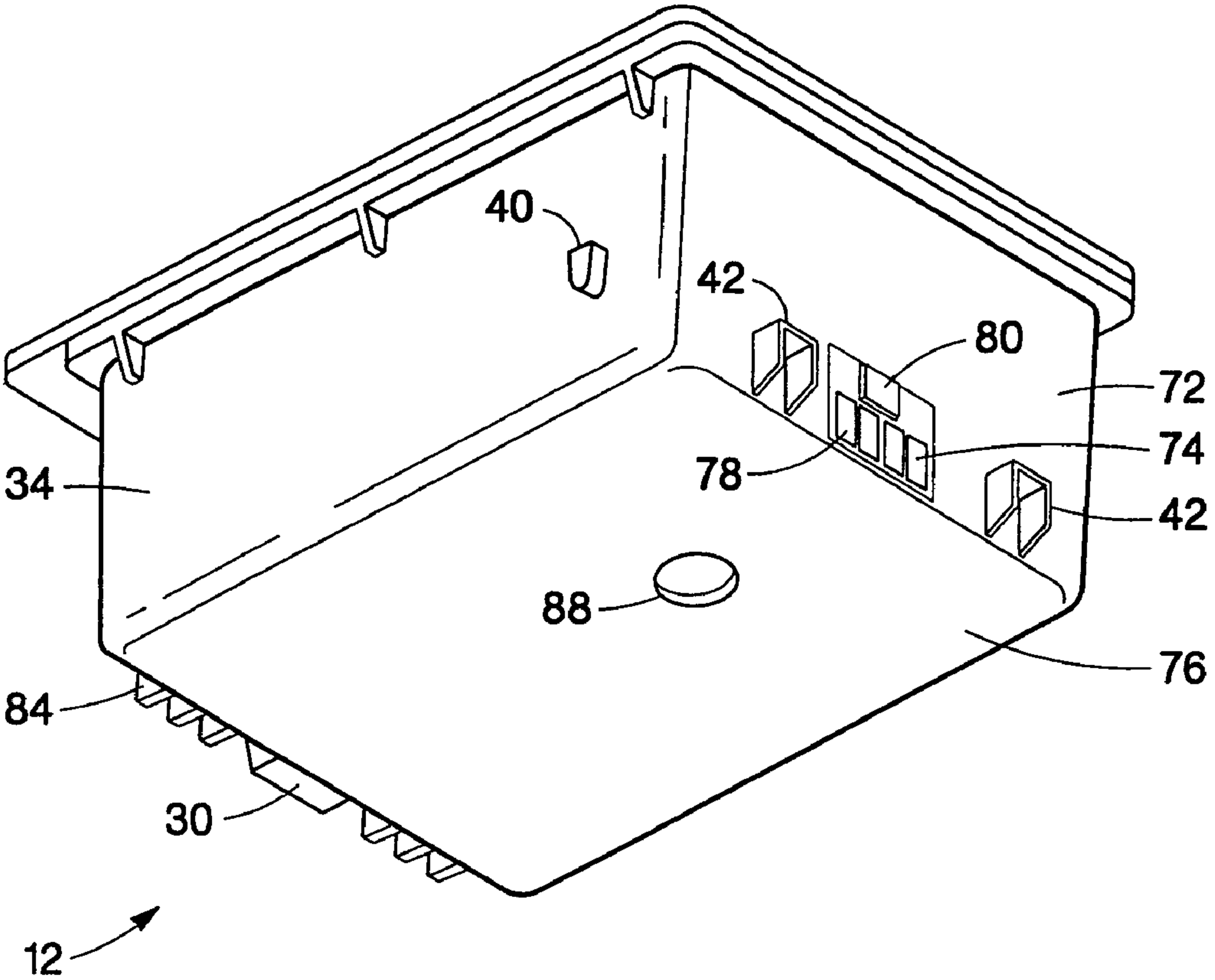
40
42
80
72
74
78
42
34
88
76
84
30
12