March 22, 1932. W. A. ABEGG 1,850,338

VISE

Original Filed Feb. 16, 1929 2 Sheets-Sheet 1

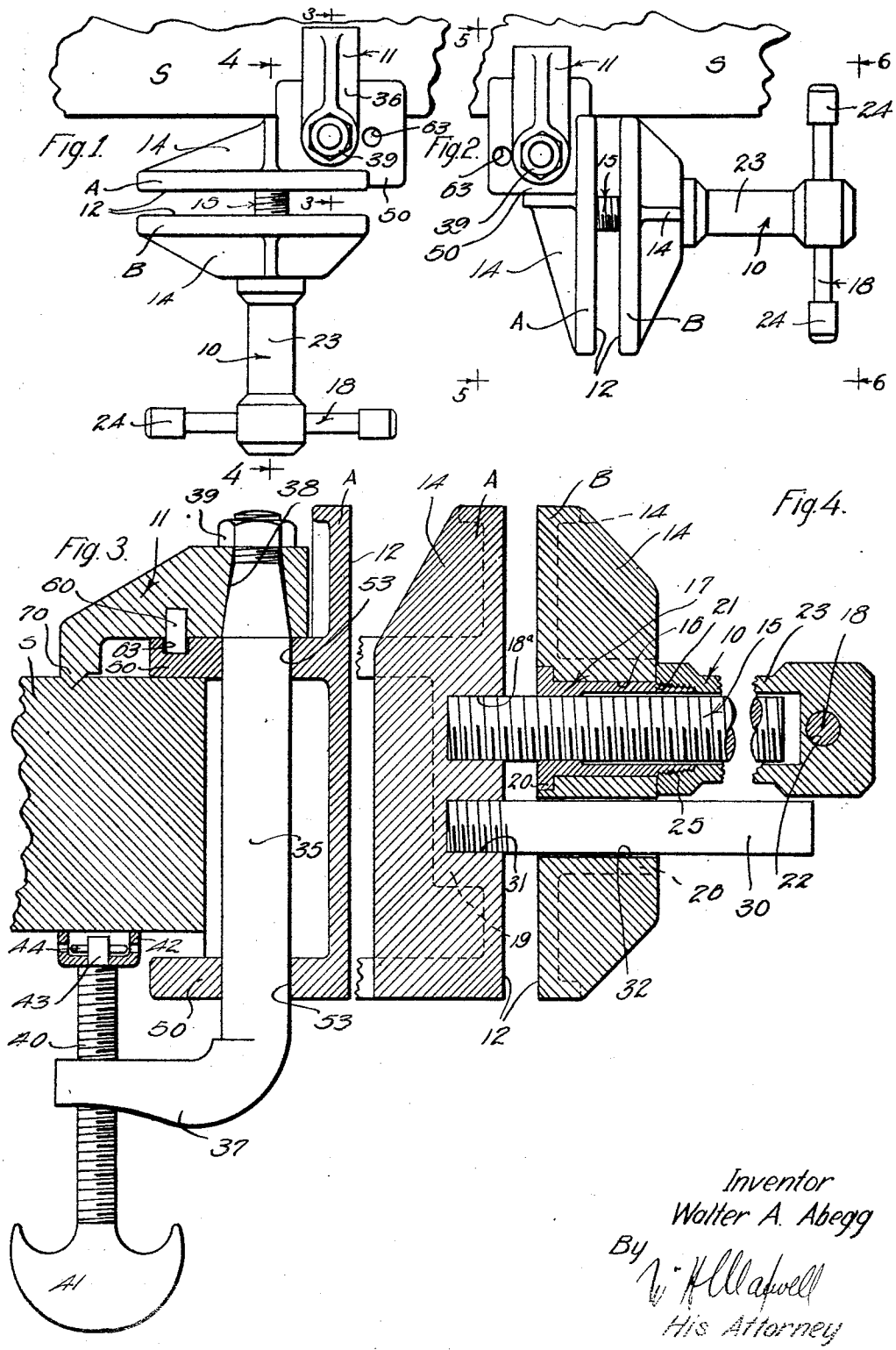

Inventor
Walter A. Abegg
By [signature]
His Attorney

March 22, 1932. W. A. ABEGG 1,850,338

VISE

Original Filed Feb. 16, 1929 2 Sheets-Sheet 2

Fig. 5

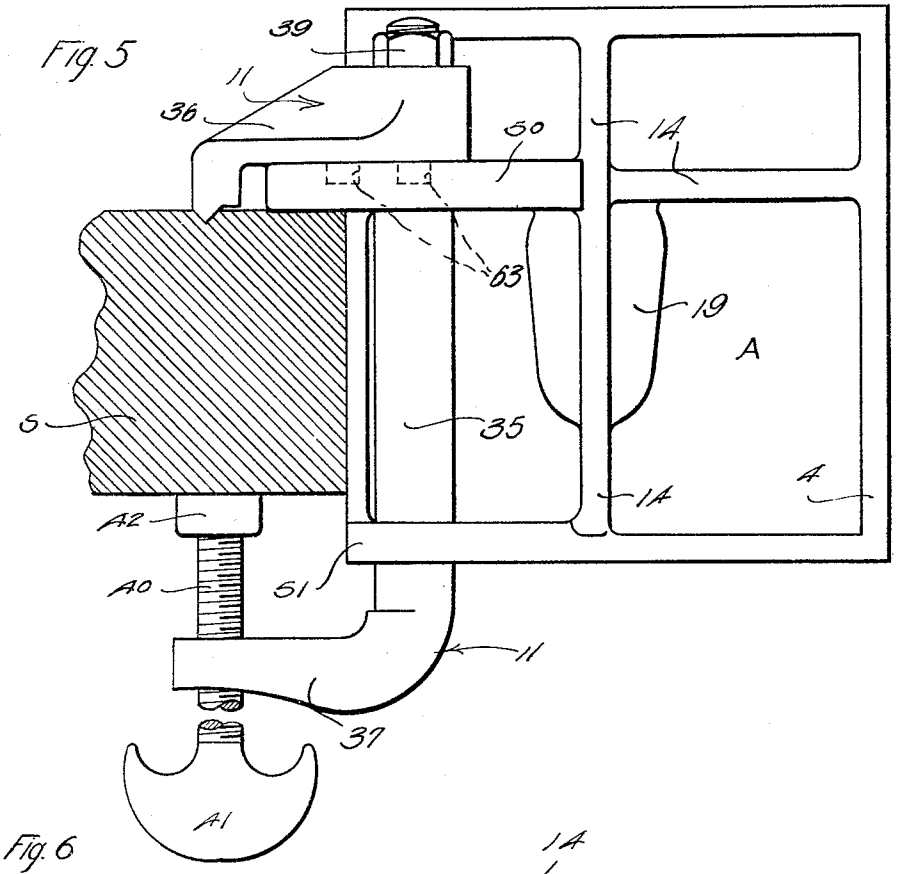

Fig. 6

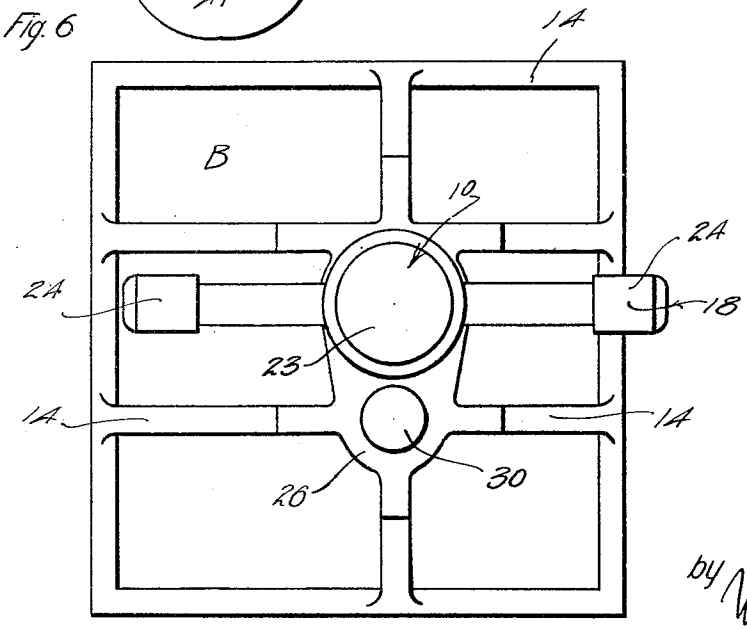

Inventor
Walter A Abegg
by W. H. Maxwell
His Attorney

Patented Mar. 22, 1932 1,850,338

UNITED STATES PATENT OFFICE

WALTER A. ABEGG, OF LOS ANGELES, CALIFORNIA, ASSIGNOR OF ONE-HALF TO BALDWIN REINHOLD

VISE

Original application filed February 16, 1929, Serial No. 340,531. Divided and this application filed May 19, 1930. Serial No. 453,542.

This invention has to do with a vise or clamp device, and it is a general object of the invention to provide a simple, practical, and improved vise useful for various classes of work and particularly for wood work.

This application is a division of my co-pending application entitled Vise, Serial Number 340,531, filed February 16, 1929.

It is an object of the present invention to provide a vise construction which can be conveniently and securely applied to a support such as a bench, or the like, with its gripping parts or jaws disposed in different positions with reference to the support.

Another object of the invention is to provide a vise in which the clamping jaws and the mounting means are formed or related in a manner to give the device a wide range of uses and to make it simple and convenient to use.

It is a further object of the invention to provide an effective, improved mounting means for applying a vise, or the like, to a support. An important feature of the mounting means provided by this invention is the arrangement whereby the mounting means operates to positively and securely hold a part, for instance, a jaw of the vise, rigid with reference to the support without applying the mounting strains through the said part or jaw in a manner which tends to distort or strain it.

It is another object of this invention to provide a vise construction comprising a pair of gripping jaws and a C clamp wherein the jaws are free to receive work from any direction while the clamp can be varied in position with reference to the jaws and operated to firmly apply the jaws to a support.

Another object of the invention is to provide an improved arrangement of operating means with reference to the jaws and mounting clamp whereby the jaws can be mounted adjacent a support and parallel with it without interference of the operating means.

The various objects and features of the invention will be best and more fully understood from the following detailed description of a typical form and application of the invention, throughout which description I refer to the accompanying drawings, in which:

Fig. 1 is a plan elevation showing a device embodying the present invention arranged in connection with a support and with the jaws of the device in one position with reference to the support. Fig. 2 is a view similar to Fig. 1 showing the jaws in another position with reference to the support. Fig. 3 is an enlarged detailed sectional view taken as indicated by line 3—3 on Fig. 1. Fig. 4 is an enlarged detailed sectional view taken as indicated by line 4—4 on Fig. 1. Fig. 5 is an enlarged view taken as indicated by line 5—5 on Fig. 2, and Fig. 6 is an enlarged view taken as indicated by line 6—6 on Fig. 2.

The construction provided by my present invention includes, generally, a pair of clamping jaws A and B, operating means 10 to cause relative movement between the jaws, and mounting means 11 for mounting the jaws on a support S. In the present disclosure of the invention I set forth jaws A and B particularly suited for handling wood work, or the like, and I have shown a form of mounting means 11 suitable for applying the device to a support in the form of a bench, or the like. It is to be understood that the broader principles of the invention contemplate modification or variation of the parts to suit any particular class of work, and therefore the invention is not to be considered limited by the detailed disclosure herein made, but is to be measured by the appended claims.

The jaws A and B have flat oppositely disposed gripping faces 12 adapted to engage the work to be held in the device. In the form of the invention illustrated the jaws are shaped and proportioned so that the faces 12 are rectangular or substantially square and the two jaws correspond in size and configuration. It is to be understood that the jaws may be made in various sizes and shapes to accommodate various classes of work. In practice I make the jaws A and B in the form of castings and provide their rear sides with strengthening or reinforcing ribs 14. It is to be understood that the reinforcing ribs can be arranged and proportioned to

give the jaws the desired strength and rigidity.

The means 10 for operating the jaws A and B relative to each other is a screw means. The means 10 illustrated in the drawings includes, generally, a screw threaded stud 15 carried by one of the jaws to project from its face 12 and through an opening 16 formed through the other jaw, a nut 17 screw threaded on the stud 15 and carried in the opening 16, and an operating handle 18 operatively connected with the nut. To facilitate the present description I will refer to the jaw A as the inner jaw and the jaw B as the outer jaw. The stud 15 is carried by the inner jaw A while the nut 17 is carried by the outer jaw B. The stud 15 may be threaded or seated tightly in a socket 18^a formed in the inner jaw A from its face 12. In practice a boss 19 may be formed on the back of the inner jaw A so that the socket 18^a may be sufficiently deep to effectively carry the stud.

The nut member 17 is rotatably carried in the opening 16 formed through the outer jaw B and is provided at one end with a radial flange 20, which seats in a counter bore provided in the opening 16 at the face of the jaw, and is provided at its other end with a tubular extension 21 which projects freely over the stud to a point beyond its outer end. The extension 21 of the nut 17 is provided with a transverse opening 22 at a point beyond the outer end of the stud to receive the operating handle 18. In the construction illustrated the end portion of the extension 21 having the opening 22 is made solid as shown in Fig. 4 of the drawings.

A sleeve 23 surrounds the extension 21 beyond the jaw B and engages the back of the jaw. The sleeve 23 fits over the extension 21 at the opening 22 and is provided with openings to register with the opening 22 so that the handle 18 passes transversely through the sleeve 23 as well as the nut extension 21. The handle 18 may be in the form of a rod slidably fitting the openings in the extension 21 and sleeve 23 and may be provided at its ends with knobs 24 to prevent it from becoming displaced from the openings. In the particular construction ilustrated the sleeve 23 not only fits over the nut extension 21 but is screw threaded to it at 25. In the preferred construction a boss 26 is provided on the back of the jaw B and the opening 16 is formed through the boss. This construction gives the nut and nut extension a long bearing in the jaw.

It will be apparent that the construction above described allows the nut 17 to rotate freely in the opening 16 but prevents it from moving longitudinally therein. The flange 20 prevents longitudinal movement of the nut in one direction while the sleeve 23 engaging the jaw prevents its longitudinal movement in the opposite direction.

In the drawings I have illustrated a guide 30 connecting the jaws A and B to hold them in register or in proper position opposite each other. The guide 30 may comprise a rod carried by one of the jaws to project from its face and extend through a suitable opening in the other jaw. In the construction illustrated the guide rod is tightly carried in a socket 31 provided in the face of the jaw A near the socket which carries the stud 15. The guide rod projects from the jaw A parallel with the stud 15 and slidably fits an opening 32 provided in the jaw B. The stud and guide rod are preferably located close to one another and near the center of the jaws.

The construction above described is fully set forth and is claimed in my co-pending application entitled Vise, filed February 16, 1929, Serial Number 340,531.

The mounting means provided by my invention is in the nature of a **C** clamp cooperatively associated with one of the jaws hereinabove mentioned. In the particular case illustrated the mounting means 11 is connected with or carried by the inner jaw A.

The mounting means comprises, primarily, a **C** clamp having a middle or body portion 35 and laterally projecting arms 36 and 37 at the ends of the body. The body 35 of the clamp is preferably a straight part round in cross section. In the drawings I have shown one of the arms of the clamp integral with the body and the other arm formed separate from the clamp and applied thereto. The arm 36 is provided on what I may term the upper end of the body 35 and is formed separate from the body. I have shown the arm 36 mounted on a tapered part 38 at the upper end of the body to be clamped tightly on the body by a nut 39 screw threaded on the end of the body beyond the arm. The arm 37 is shown integral with the body 35 being formed by turning the end portion of the body to project laterally from the main portion thereof.

A set or clamp screw 40 is carried by one arm of the mounting clamp. In the preferred arrangement the clamp screw 40 is carried by the lower arm 37 of the **C** clamp. The clamp screw is provided at its lower end with an operating handle 41 and is provided at its upper end with a rotatable head 42 adapted to engage the support against which the screw reacts. The head 42 may be a cup-shaped member rotatably carried on the reduced end 43 of the screw to be retained thereon by a key 44 extending through the reduced part 43 within the cup.

The connection between the **C** clamp above described and the inner jaw A is made through lugs or flanges 50 and 51 projecting from the back of the jaw A to carry the body 35 of the clamp. In the preferred arrangement the flanges 50 and 51 are located on the back of the jaw A adjacent one side edge of the jaw. Further, the flanges are preferably located so that the upper one is

spaced somewhat below the upper edge of the jaw as shown in Fig. 3 of the drawings. The other or lower flange 51 may adjoin the opposite or lower edge of the jaw so that the lower part of the clamp projects below the jaw as shown in Fig. 3. The object in spacing the upper flange 50 from the upper edge of the jaw is to have the parts related so that the clamp does not project above the jaws.

The body 35 of the C clamp is rotatably carried in openings 53 provided in the flanges 50 and 51 so that the upper arm 36 is above the flange 50 and projects outwardly beyond it while the lower arm 37 is below the flange 51 and projects outwardly beyond it. The body of the clamp, being rotatably carried in the openings 53, allows the C clamp to be turned or swung to different positions with reference to the jaw A as will be seen from examination of Figs. 1 and 2 of the drawings. This relationship of the clamp jaws and mounting clamp permits of the device being applied to a support S with the clamp jaws in various positions.

Ordinarily it is desired to arrange the clamp jaws A and B either parallel to the support or at right angles to it, as shown in Figs. 1 and 2 of the drawings, and in practice it is convenient to provide the device with means for setting the C clamp in two different positions such as are shown in Figs. 1 and 2. This means may include a locking pin 60 carried by the upper arm 36 of the clamp to project downwardly for cooperation with sockets 63 located in the flange 50. The body 35 of the clamp is mounted for longitudinal movement in the flanges 50 and 51 so that the pin 60 can be moved into and out of the sockets 63. It will be apparent that this construction permits of the clamp being effectively set in the desired position with reference to the jaws, it being obvious that any desired positions can be obtained by providing various numbers and arrangements of sockets 63.

In accordance with the present invention the construction above described is adapted to be applied to a support S in the manner shown in Fig. 3 so that the flange 50 on the back of the inner jaw A bears or seats on the support while the clamp screw 40 is operated to engage the support so that the flange 50 is clamped to it. In the preferred construction the outer part of the upper clamp arm 36 is provided with a jaw part 70 to engage the support S at the same time that the flange 50 engages it. The part 70 of the arm 36 is preferably located substantially opposite the clamp screw 40 so that the clamping strain is taken through the C clamp, while the flange 50, which is a part of the jaw A, is clamped tightly to the support. With this construction the jaw A is clamped in direct bearing engagement with the support without being put under strain. It will be obvious that the clamping strain is borne through the C clamp, and therefore the danger of breaking the jaw A by over straining the mounting means is completely eliminated.

From the foregoing description it will be apparent that the device can be used for various classes of work and that it is particularly suited for cabinet or wood work. The device can be used as a clamp where the two jaws A and B alone are needed or as a clamp where the jaws A and B together with the C clamp are needed. Likewise it will be obvious that the device may be used as a vise with the jaws A and B set in various positions such as I have shown in the drawings.

Having described only a typical preferred form of my invention, I do not wish to limit myself to the specific details set forth, but wish to reserve to myself any changes or variations that may appear to those skilled in the art or fall within the scope of the following claims:

Having described my invention, I claim:

1. A tool of of the character described including, two jaws, means for operating the jaws, a C clamp, and a part projecting from one of the jaws and carrying the clamp, said part being adjacent one arm of the clamp so as to be directly clamped to an object to which the clamp is applied.

2. A tool of the character described including, two jaws, means for operating the jaws, and mounting means for the jaws including a C clamp, and a part projecting from one of the jaws rotatably carrying the body of the clamp and located adjacent one arm of the clamp so as to directly engage and be clamped to an object to which the clamp is applied.

3. A tool of the character described including, two jaws, means for operating the jaws, and mounting means for the jaws including a C clamp having a body with arms projecting from its ends, and spaced flanges projecting from one of the jaws and rotatably carrying the body of the clamp, one of the flanges being located adjacent one arm of the clamp so as to directly engage and be clamped to the object to which the clamp is applied.

4. A tool of the character described including, two jaws, means for operating the jaws, and mounting means for the jaws including a C clamp, a flange on the back of one of the jaws rotatably carrying the clamp, and means whereby the clamp is set against rotation relative to said jaw when the clamp is set.

5. A tool of the character described including, two jaws, means for operating the jaws, and mounting means for the jaws including a C clamp having a body with arms projecting from its ends, spaced flanges projecting from one of the jaws and rotatably carrying the body of the clamp, one of the flanges being located adjacent one arm of the clamp, and means whereby the clamp is en-

gaged with one of the flanges to hold it against rotation when the clamp is set.

6. A tool of the character described including, two jaws, means for operating the jaws, and mounting means for the jaws including a C clamp having a body with arms projecting from its ends, spaced flanges projecting from one of the jaws and rotatably carrying the body of the clamp, one of the flanges being located adjacent one arm of the clamp, and means whereby the clamp is engaged with one of the flanges to hold it against rotation when the clamp is set, the last-mentioned means being releasable by movement of the clamp longitudinally relative to the axis of connection with said jaw.

7. A tool of the character described including, two jaws, means for operating the jaws, a C clamp and a part projecting from one of the jaws and carrying the clamp, said part being adjacent one arm of the clamp to directly engage and be clamped to an object to which the clamp is applied and projecting beyond one edge of the jaw.

8. A tool of the character described including, two jaws, means for operating the jaws, a C clamp and a part projecting from one of the jaws and carrying the clamp, said part being adjacent one arm of the clamp to directly engage and be clamped to an object to which the clamp is applied and projecting from the back of the jaw and beyond one edge of the jaw.

9. A tool of the character described including, a C clamp having a body round in cross section and having spaced arms on the body, two jaws, means for operating the jaws, a flange on one jaw having an opening passing the body of the clamp, the said body being rotatable and longitudinally shiftable in the opening, means on the clamp for clamping the flange directly onto an object, and means for setting the flange against rotation relative to the said body when in a clamped position.

10. A tool of the character described including, a C clamp having a body round in cross section and having spaced arms on the body, two jaws, means for operating the jaws, a flange on one jaw rotatable and longitudinally shiftable on the body of the clamp, means on the clamp for clamping the flange on an object, and means for setting the flange against rotation when in a clamped position, the last-mentioned means including a pin on an arm of the clamp adapted to seat in an opening in the flange.

11. A tool of the character described including, a C clamp having a body round in cross section and having spaced arms on the body, two jaws, means for operating the jaws, a flange on one jaw rotatable and longitudinally shiftable on the body of the clamp and having a plurality of spaced openings, means on the clamp for clamping the flange on an object, and means for setting the flange against rotation in various rotative positions relative to the body of the clamp, the last-mentioned means including a pin on an arm of the clamp adapted to seat in said openings.

12. A tool of the character described including, a C clamp having a body round in cross section and having spaced arms on the body, two jaws, means for operating the jaws, a flange on one jaw rotatable and longitudinally shiftable on the body of the clamp, means on the clamp for clamping the flange on an object, and means for setting the flange against rotation in various rotative positions relative to the body of the clamp when in a clamped position.

13. A tool of the character described including, two jaws, means for operating the jaws, and mounting means for the jaws including a C clamp having a body round in cross section and having spaced arms on the body at the ends of the body, a part projecting from one of the jaws having an opening rotatably passing the body of the clamp, and means on one of the arms for clamping against an object, one of the arms of the clamp being detachable from the body of the clamp.

14. A tool of the character described including, two jaws, means for operating the jaws, a C clamp including a body of round cross section, an arm on one end of the body, the arm being detachable from the body, and means at the other end of the body for clamping against an object, and a connection between one of the jaws and the body whereby the jaws are rotatable about the body of the clamp, said connection engaging the body between the arm and said means.

In witness that I claim the foregoing I have hereunto subscribed my name this 4th day of March, 1930.

WALTER A. ABEGG.