(12) INTERNATIONAL APPLICATION PUBLISHED UNDER THE PATENT COOPERATION TREATY (PCT)

(19) World Intellectual Property Organization
International Bureau

(43) International Publication Date
6 January 2011 (06.01.2011)

PCT

(10) International Publication Number
WO 2011/000065 A2

(51) International Patent Classification:
F28F 1/12 (2006.01)

(21) International Application Number:
PCT/BR2010/000171

(22) International Filing Date:
27 May 2010 (27.05.2010)

(25) Filing Language: English

(26) Publication Language: English

(30) Priority Data:
PI0902365-8 3 July 2009 (03.07.2009) BR

(71) Applicant *(for all designated States except US)*: **WHIRLPOOL S.A.** [BR/BR]; Avenida das Nações Unidas, 12.995 - 32° andar, Brooklin Novo, 04578-000 São Paulo - SP (BR).

(72) Inventors; and
(75) Inventors/Applicants *(for US only)*: **ROSSANO HOENISCH, Paulo** [BR/BR]; Av Santos Dumont, 800 - apto. 602, Bairro Bom Retiro, 89223-001 - Joinville - SC (BR). **KERCHER, Rafael** [BR/BR]; Rua Carlos Willy Boehm, nr. 287 - apto. 404, Santo Antônio, 89218-301- Joinville - SC (BR).

(74) Agent: **DANNEMANN, SIEMSEN, BIGLER & IPANEMA MOREIRA**; Caixa Postal 2142, Rua Marques de Olinda, 70 - Botafogo, 22251-040- Rio de Janeiro-RJ (BR).

(81) Designated States *(unless otherwise indicated, for every kind of national protection available)*: AE, AG, AL, AM, AO, AT, AU, AZ, BA, BB, BG, BH, BR, BW, BY, BZ, CA, CH, CL, CN, CO, CR, CU, CZ, DE, DK, DM, DO, DZ, EC, EE, EG, ES, FI, GB, GD, GE, GH, GM, GT, HN, HR, HU, ID, IL, IN, IS, JP, KE, KG, KM, KN, KP, KR, KZ, LA, LC, LK, LR, LS, LT, LU, LY, MA, MD, ME, MG, MK, MN, MW, MX, MY, MZ, NA, NG, NI, NO, NZ, OM, PE, PG, PH, PL, PT, RO, RS, RU, SC, SD, SE, SG, SK, SL, SM, ST, SV, SY, TH, TJ, TM, TN, TR, TT, TZ, UA, UG, US, UZ, VC, VN, ZA, ZM, ZW.

(84) Designated States *(unless otherwise indicated, for every kind of regional protection available)*: ARIPO (BW, GH, GM, KE, LR, LS, MW, MZ, NA, SD, SL, SZ, TZ, UG, ZM, ZW), Eurasian (AM, AZ, BY, KG, KZ, MD, RU, TJ, TM), European (AL, AT, BE, BG, CH, CY, CZ, DE, DK,

[Continued on next page]

(54) Title: FORCED AIR FLOW MODULE FOR A HEAT EXCHANGER AND HEAT EXCHANGER

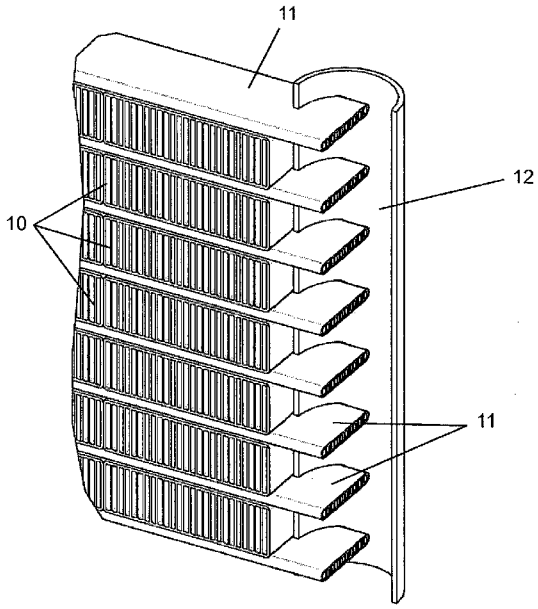

Fig. 4

(57) Abstract: The present invention refers to a forced air flow module (10) for a heat exchanger (1), which comprises, on its inside, a multiplicity of parallel air flow channels (106), the module (10) also defined by a pair of parallel side walls (103) and (104) and a pair of parallel horizontal walls (101) and (102), the channels (106) being defined by a multiplicity of walls (105) parallel to the side walls (103) and (104). The invention also refers to a heat exchanger (1) having at least two sets of parallel cooling flow circulation tubes (11), where between the two cooling flow circulation sets (11) there is disposed at least one forced air flow module (10). The objective of the present invention is to provide a heat exchanger which enables better heat exchange between the cooling fluids and the air, permits an increase in the mechanical resistance of the heat exchanger, besides facilitating the welding on the cooling tubes and which enables a reduction in energy consumption.

WO 2011/000065 A2

EE, ES, FI, FR, GB, GR, HR, HU, IE, IS, IT, LT, LU, LV, MC, MK, MT, NL, NO, PL, PT, RO, SE, SI, SK, SM, TR), OAPI (BF, BJ, CF, CG, CI, CM, GA, GN, GQ, GW, ML, MR, NE, SN, TD, TG).

Published:

— *without international search report and to be republished upon receipt of that report (Rule 48.2(g))*

Specification of Patent of Invention for **"FORCED AIR FLOW MODULE FOR A HEAT EXCHANGER AND HEAT EXCHANGER".**

The present invention refers to a forced air flow module for heat exchangers which, by way of its unprecedented arrangement, enables the entry of the air flow coming from the helix to exchange heat efficiently with the cooling flow of a heat exchanger.

The above module enables a better weldability with the heat exchanger, has a simplified construction, increases the mechanical resistance of the heat exchanger and allows a reduction in energy consumption.

Description of the State of the Art

Heat exchangers are devices used to exchange heat between the atmospheric air and another substance (generally a liquid) contained in a closed system. There are many kinds of heat exchangers which can be classified according to various criteria, and what meets the object of this application are the heat exchange models of the cross-current, dry surface kind or indirect contact processes, such as condensers, evaporators and coolers.

The heat exchanger of the cross-current, dry surface kind or indirect contact processes is characterized by having cooling tubes or channels spaced apart and disposed in parallel relation, interlinked by their ends by their headers and also by having fins disposed vertically to the tubes and therebetween.

This arrangement allows the heat exchanger to cool the cooling flow which runs through the tubes, through indirect contact between the cross or transverse air flow and the tubes. The cross air flow comes from a helix outside the system, which combined with the characteristics described above provide a quicker and more efficient exchange of heat.

Various heat exchangers similar to the one mentioned above are described in the state of the art, such as, for example, in the North American document US 2008/0184732, which describes an evaporator for an automobile air-conditioner comprising, in one of its preferred embodiments, an evaporator comprised by adjacent flat tubes, rectangular tubes, preferably disposed on the flat tubes, headers and also undulating fins.

Moreover, the document describes the rectangular tubes as being connected to a cooling circuit so they can cool the liquid and guide it to the evaporator.

Additionally, the document describes that the rectangular tubes transport a mixture of water with cooling liquid, and also that said rectangular tubes can partially or completely substitute the undulating fins.

However, the main drawback of the solution proposed by this document lies in the fact that the rectangular tubes use a liquid medium to exchange heat with the fluid, besides the additional need of using the cooling circuit.

A flat tube having two extreme passages and a plurality of intermediate passages is described in North American patent US 6.000.467, which also defines that the extreme unit passages have an internal circular surface, which can also be elliptical or any other shape, such as rectangular, triangular or trapezoidal. The patent also describes that the tube has a high resistance against being hit and has a high heat exchanging performance.

Additionally, patent US 6.000.467 describes that this kind of tube is preferably used in heat exchangers of the condenser kind for an automobile air-conditioner. In this preferred embodiment, there are used undulating fins disposed between the flat tubes, forming a 90° angle therewith for the passage of cooled air and consequent exchange of heat with the cooling flow.

The North American document US 2006/0086490 describes a condenser for a vapor generator having a central tube and a plurality of parallel fins formed from the central tube.

This document also mentions that the central tube has an oval or elongated shape and the fins are individual and connected to the central tube by welding or brazing.

Additionally, the North American document describes that the vapor flow which runs through the inner portion of the central tube of the condenser meets the cooled air that passes through the fins and cools and condenses the vapor.

The object described in this document, however, uses many welds to join the fins to the central tube, does not use cooling flow liquid, and also does not allow the flow between the cooled air and the vapor at 90°.

The North American patent US 6.079.487 describes a heat exchanger of the fin kind with forced air flow, which comprises heat exchange tubes and a plurality of flat fins having openings and deflectors.

The patent also describes that the fins are disposed perpendicularly to the tubes, spaced apart from each other and that the forced air flow runs in the same direction as the tubes.

This patent has some drawbacks, such as, for example, the need for a greater air flow to exchange heat with the tubes, since the tubes have a large inner section, and additionally do not allow total contact of the forced air flow with the tube, thus reducing its thermal efficiency.

In light of the above, it can be seen that there has not yet been developed a forced air flow module for a heat exchanger which enables the entry of the air flow coming from a helix to exchange heat in an efficient manner with the cooling flow of a heat exchanger, also presenting better weldability with the exchanger, a simplified construction, besides increasing the mechanical resistance of the heat exchanger and decreasing the energy consumption.

Objectives of the Invention

The objective of the present invention is to provide a forced air flow module for a heat exchanger which, due to its particular construction, enables a better heat exchange between the cooling fluids and the air.

Another objective of the present invention is to provide a forced air flow module for a heat exchanger which, due to its construction, allows the mechanical resistance of the heat exchanger to be increased, besides facilitating the welding between the cooling tubes.

A further objective of the present invention is to provide a heat exchanger which, due to the forced air flow modules, enables better heat exchange between the cooling fluids and the air, whereby reducing energy consumption.

Summary Description of the Invention

The objectives of the present invention are achieved by a forced air flow module for a heat exchanger which comprises, on its inside, a multiplicity of parallel air flow channels, where the module is defined by a pair of parallel side walls and by a pair of parallel horizontal walls, the channels being defined by a multiplicity of walls parallel to the side walls.

The characteristics mentioned above, as well as other aspects of the present invention, will be better understood by the examples and the detailed description of the drawings that follow.

Brief Description of the Drawings

The present invention will now be described in greater detail based on a sample of execution represented in the drawings, which show:

Figure 1A – a cut view of an evaporator of the state of the art;

Figure 1B – a cut view of another evaporator of the state of the art;

Figure 2 – a front view of a preferred embodiment of the heat exchanger of the present invention;

Figure 3 – a C-C cut view of the preferred embodiment shown in figure 2;

Figure 4 – a perspective view of the multidoor cooling tubes, of the multidoor forced air flow tubes of the present invention and of the end tubes;

Figure 5 – a front view of the multidoor forced air flow tube of the present invention; and

Figure 6 – another front view of the multidoor forced air flow tube of the present invention.

Detailed Description of the Drawings

Figure 1A illustrates an evaporator of the state of the art, having cooling elements 80, corrugated fins 82 and multidoor cooling tubes 81, wherein the cooling elements 80 are disposed on the corrugated fins 82 and between the multidoor cooling tubes 81, forming an angle of 90° therewith, the cooling elements 80 being disposed in the same direction as the cooling

tubes 81.

Figure 1B illustrates the embodiment of another evaporator of the state of the art, where the cooling elements 80 are disposed between the multidoor cooling tubes 81 and in the same direction thereof, but without using the corrugated fins 82.

The drawback to the solution proposed in figure 1A of the state of the art, lies in the increase in the quantity of welds in the evaporator, as well as the need for the combined use of the corrugated fins 82 and the cooling element 80, to help improve the thermal efficiency of the heat exchanger.

Additionally, it can be seen both in the evaporator of the figure 1A and in the evaporator of figure 1B the cooling elements 80 are disposed in the same direction as the multidoor cooling tubes 81 and not disposed perpendicularly.

Additionally, the cooling elements 80 are used to transport a mixture of water and cooling liquid, where to cool this mixture it is necessary to use an external cooling circuit.

It is also important to point out that the drawbacks mentioned above mean the thermal efficiency achieved by the evaporator is not ideal, that is, meaning it is necessary to use more energy to perform the heat exchange.

Figure 2 shows a preferred embodiment of the present invention, which comprises a heat exchanger 1 having a multiplicity of forced air flow modules 10, a multiplicity of cooling flow circulation sets 11 and two end tubes or headers 12.

More specifically as shown in figure 2, the heat exchanger 1 comprises eight cooling flow circulation sets 11, where in each region 2 comprised between the sets 11, there are disposed in parallel five forced air flow tubes 10. Naturally, according to the present invention, the heat exchanger may comprise any quantity of cooling flow circulation sets 11 and forced air flow tubes 10.

Figure 3 illustrates a portion of a heat exchanger 1, where it is possible to verify the disposition of the forced air flow modules 10 in a region

2, between the cooling flow circulation tubes 11.

Still regarding figure 3, it is possible to identify that the forced air flow modules 10 are disposed perpendicularly to the cooling flow circulation tubes 11 and lengthwise between the end tubes 12, allowing, by way of this arrangement, better thermal efficiency, mainly compared to the embodiment of the state of the art illustrated in figures 1A and 1B.

The end tube or header 12 is illustrated in figure 4, along with the forced air flow modules 10 and with the cooling flow circulation tubes 11.

In heat exchangers, the headers 12 serve to interconnect the cooling flow circulation tubes 11, enabling the cooling flow to run through the circulation tubes 11 in a zigzag movement therebetween. During this movement, the cooling flow perpendicularly crosses the forced air flow modules 10, enabling a heat exchange with the air that passes through the channels 106 of the modules 10.

Figure 5, in turn, illustrates the front view of the forced air flow module 10, defined by a pair of parallel horizontal walls 101 and 102 and by a pair of parallel vertical walls 103 and 104 which present channels 106 defined by a multiplicity of inner walls 105 parallel to the vertical walls 103 and 104.

As can be seen in figure 6, the channels 106 of the forced air flow module 10 may present a first width *d1*, that is, a distance between the parallel walls 105 comprised between 0.8 and 1.0 millimeter. Further, the channels 106 may comprise a first height *h1*, that is, a distance between the horizontal walls 101 and 102 comprised between 8 and 10 millimeters.

Additionally, the parallel walls 105 may present a first thickness *e1* comprised between 0.3 and 0.4 millimeter and also the parallel horizontal walls 101 and 102 and the parallel side walls 103 and 104 may present a second thickness *e2* comprised between 0.4 and 0.6 millimeters.

Further, in figure 6 it can be seen that the forced air flow module 10, may comprise a second height *h2* comprised between 9 and 11 millimeters and a second width d2 comprised between 31 and 33 millimeters.

The forced air flow module 10 is disposed between the cooling

flow circulation tubes 11, forming a 90° angle therewith. The modules 10 are mounted by welding on the cooling flow circulation tubes, the welding being by brazing or by another similar method. The module 10 is positioned facing a helix (not shown) to receive the air flow and exchange heat with the cooling flow.

For this embodiment, the channels 106 assume the function of the fins and based on this function the modules 10 can be manufactured in diverse variations related to the quantity of the number of walls for a given distance. By increasing or reducing the number of walls, it is possible to control the latent heat extracted from the heat exchanger 1.

Due to its construction, the forced air flow modules 10 enable the construction of a heat exchanger 1 which uses a lesser quantity of welds and replaces the usual corrugated fins, resulting in a product with better thermal efficiency and mechanical resistance.

Having described an example of a preferred embodiment, it must be understood that the scope of the present invention covers other possible variations, being limited only by the content of the claims appended hereto, potential equivalents being included therein.

CLAIMS

1. Forced air flow module (10) for a heat exchanger (1), characterized by comprising, on its inside, a multiplicity of parallel air flow channels (106).

2. Module (10) according to claim 1, characterized by being defined by a pair of parallel side walls (103) and (104) and a pair of parallel horizontal walls (101) and (102), the channels (106) being defined by a multiplicity of walls (105) parallel to the side walls (103) and (104).

3. Heat exchanger (1) having at least two sets of parallel cooling flow circulation tubes (11), characterized by the fact that between two cooling flow circulation sets (11) there is disposed at least one forced air flow module (10) as defined in claim 1 or 2.

4. Heat exchanger (1) according to claim 3, characterized by the fact that between two cooling flow circulation sets (11) there is disposed, in parallel, a multiplicity of forced air flow modules (10).

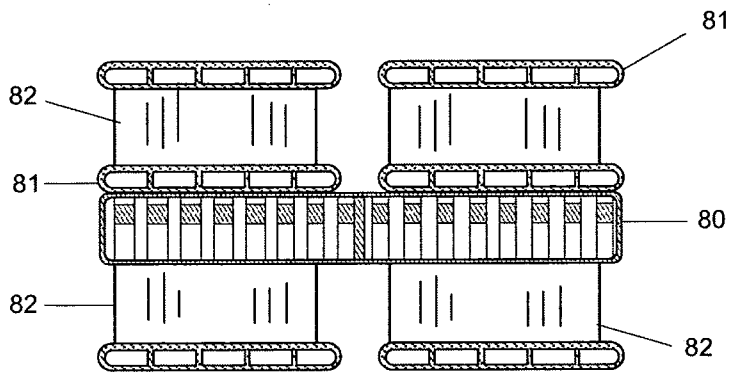

Fig.1A - State of the Art

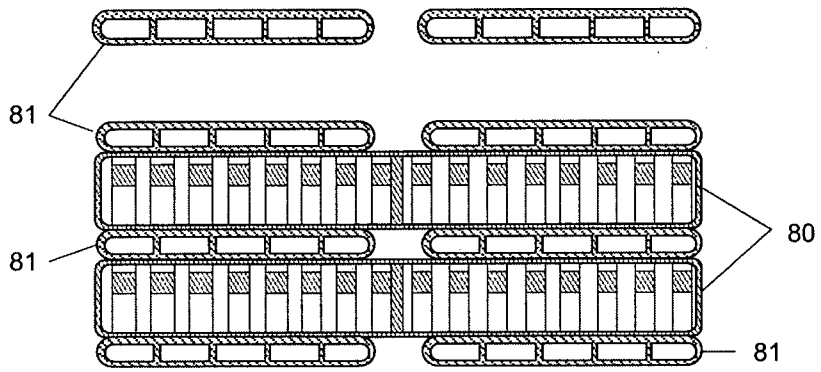

Fig.1B - State of the art

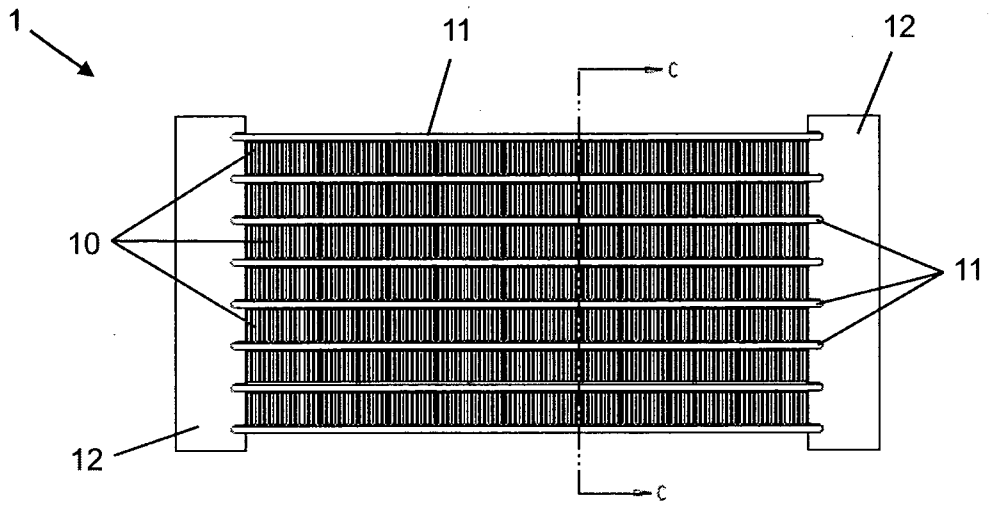

Fig. 2

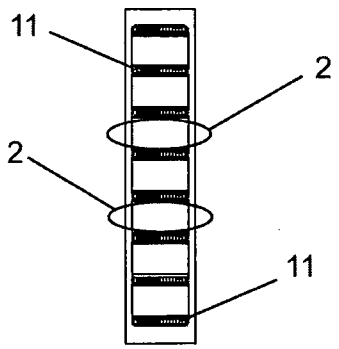

Fig. 3

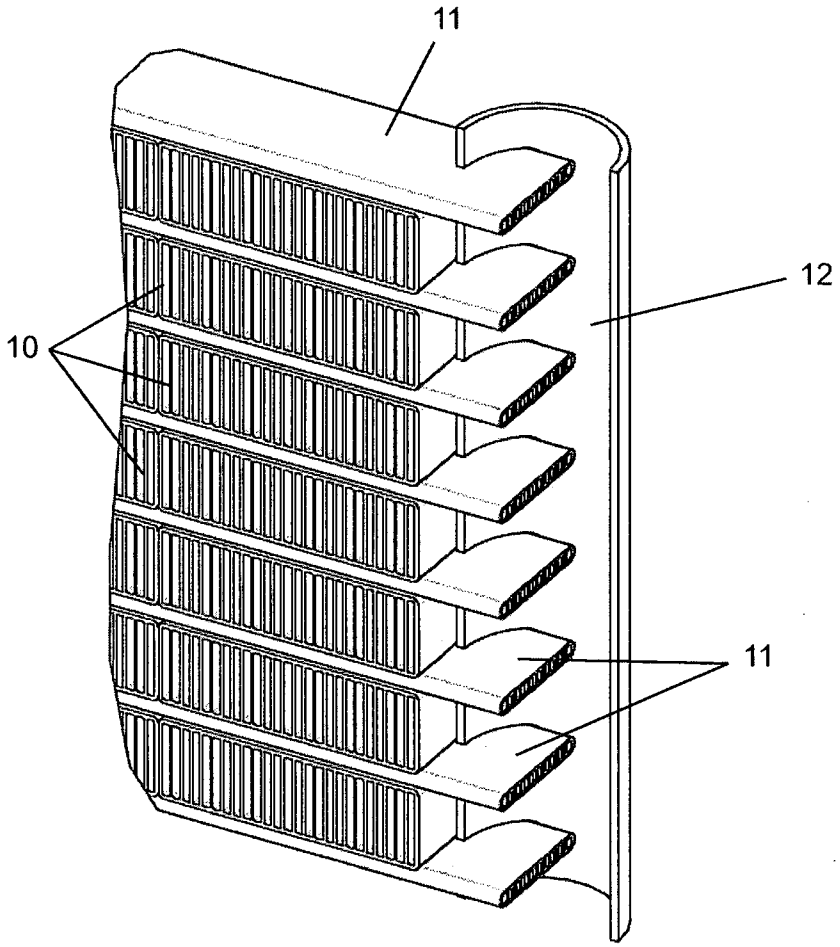

Fig. 4

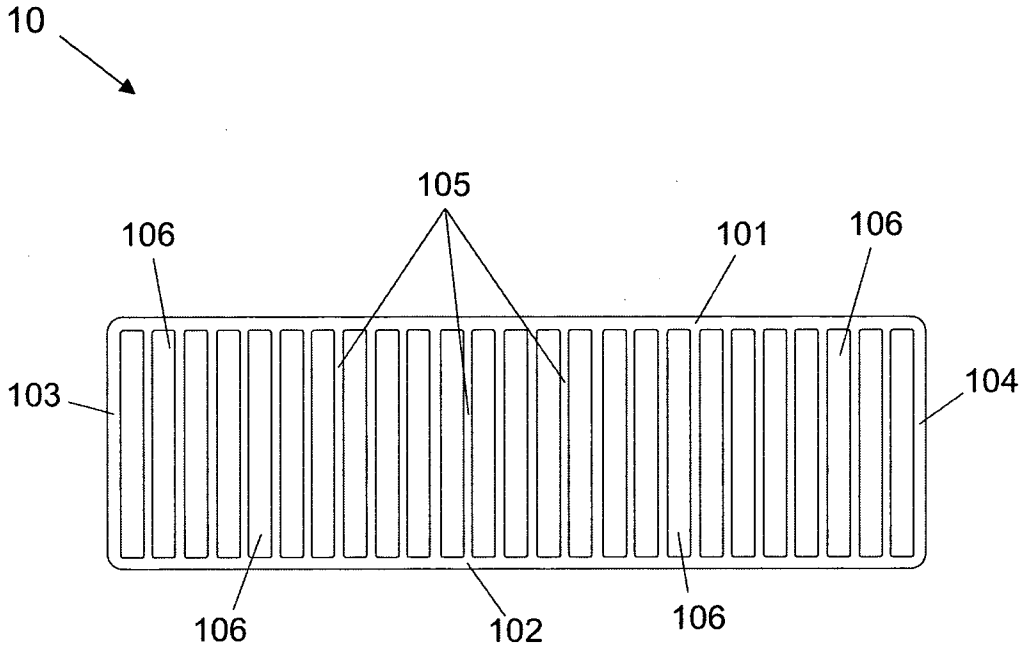

Fig.5

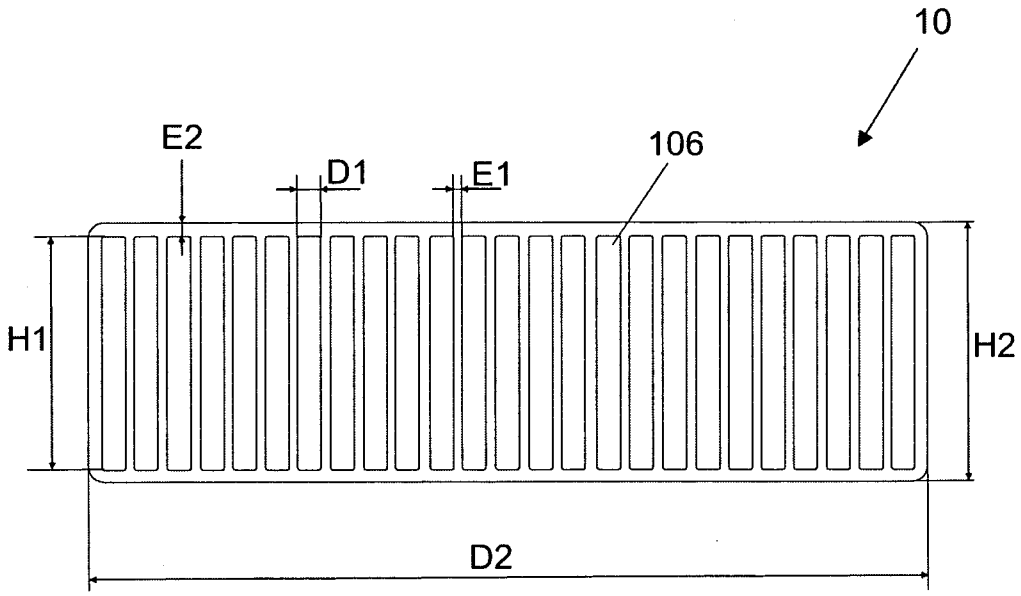

Fig.6