(19) DANMARK

(10) **DK/EP 3199027 T3**

Patent- og Varemærkestyrelsen

(12) Oversættelse af europæisk patentskrift

(51) Int.Cl.: ***F 25 C 1/243 (2018.01)*** ***A 21 B 3/13 (2006.01)*** ***A 23 P 30/10 (2016.01)***

(45) Oversættelsen bekendtgjort den: **2021-05-17**

(80) Dato for Den Europæiske Patentmyndigheds bekendtgørelse om meddelelse af patentet: **2021-02-24**

(86) Europæisk ansøgning nr.: **17153219.5**

(86) Europæisk indleveringsdag: **2017-01-26**

(87) Den europæiske ansøgnings publiceringsdag: **2017-08-02**

(30) Prioritet: **2016-01-28 FR 1650676**

(84) Designerede stater: **AL AT BE BG CH CY CZ DE DK EE ES FI FR GB GR HR HU IE IS IT LI LT LU LV MC MK MT NL NO PL PT RO RS SE SI SK SM TR**

(73) Patenthaver: **Viancin, Jean-Charles, Faber Court, Flat 2A, Block B , 29-31 Tai tam Road, Hong Kong, Kina**

(72) Opfinder: **Viancin, Jean-Charles, Faber Court, Flat 2A, Block B , 29-31 Tai tam Road, Hong Kong, Kina**

(74) Fuldmægtig i Danmark: **Zacco Denmark A/S, Arne Jacobsens Allé 15, 2300 København S, Danmark**

(54) Benævnelse: **Fleksibel form med periferisk afstivningselement og fremgangsmåde til fremstilling af en sådan form**

(56) Fremdragne publikationer:
WO-A1-2013/140000
FR-A1- 2 827 494
US-A1- 2005 199 132
US-A1- 2005 199 636
US-A1- 2006 083 833
US-A1- 2009 061 128

TECHNICAL FIELD OF THE INVENTION

The present invention relates to food molds, generally used for baking or preparing other foods in the kitchen, or for making ice cubes, comprising a food mold body having one or more cells with flexible wall, the cells being open on a common access face that is oriented upward during use, the common access face being itself limited by a peripheral rim extending radially outward and allowing the food mold to be gripped.

The flexible nature of the wall of the cells facilitates the mold-stripping.

This flexible nature of the wall of the cells does however result in the drawback of a deformation of the food mold during its manipulation by holding it by the peripheral rim, when the food mold consists entirely of a silicone-based flexible material, and when the cells are filled. This drawback is all the more inconvenient in the food molds of large size, for example the professional food molds for collective cooking.

Food molds for cooking are already known in which the peripheral rim is associated with a stiffening element. These molds are described for example in the documents EP 1 132 000 A1 or EP 1 197 149 B1. In a first embodiment, the stiffening element is formed by a metal or plastic wire with circular cross section, overmolded by injection in the silicone forming the peripheral rim, and arranged in proximity to the peripheral zone of the peripheral rim.

In practice, during the manufacturing of these known food molds, the stiffening element is directly incorporated in a shaping mold, then overmolded by silicone introduced into the shaping mold. It is necessary to provide holding means to keep the stiffening element in position in the shaping mold during the melting of the silicone, otherwise the stiffening element will not generally be covered with silicone. However, the holding means then oppose the presence of silicone in several surface zones of the stiffening element. The result thereof is that, after

manufacture, several surface zones of the stiffening element are still not covered by the silicone, which creates difficulties during the subsequent use of the food mold in a microwave oven or in a dishwasher.

Document FR 2 822 024 A3 describes a flexible food mold wherein a metal support element is set into in the mold rim by fusion. That document fails to describe any manufacturing method resulting in the metal support element being entirely embedded in the mold body material.

Document US 2009/061128 A1 describes a food mold according to the preamble of Claim 1, and a manufacturing method in thich the metal reinforcement is held, at the time of molding, by overmolded spacers made of silicone.

Document US 2005/199636 A1 describes a food mold according to the preamble of Claim 1 and in which the peripheral stiffening element is edged externally, in at least two opposing gripping zones of the peripheral rim, by a peripheral strip of material producing gripping zones of increased width. That document does not describe the manufacturing method that enables the stiffening element to be entirely embedded within the molding material.

Through experimentation, the applicant has tried to solve this problem by blocking off the surface zones which were free of any silicone, during a rework operation during which an additional molding material is introduced. A first drawback lies however in the fact that the blocked-off zones remain detectable, either by a slight difference of material color, or by an irregularity of the outer surface of the food mold in line with the blocked-off zones. A second drawback is due to the fact that the rework operation has to be performed by hand, which prevents a full automation of the food mold manufacturing process, and which introduces a risk of error and of incomplete blocking-off.

SUMMARY OF THE INVENTION

The present invention aims to avoid the drawbacks of these known food molds, by proposing a novel food mold manufacturing method by virtue of which the whole of the outer surface of the stiffening elements is masked in a reliable, automatable, totally invisible and undetectable manner, making it possible to use stiffening elements made of metal without that disrupting the subsequent use of the food mold in a microwave oven or in a dishwasher.

The present invention thus aims to produce food molds in which the masking of the stiffening elements is reliable, total and undetectable. In particular, the masking of the stiffening elements is produced totally without leaving any irregularity of the outer surface of the food mold remaining.

If necessary, the present invention makes it possible to produce food molds whose wall has at least two zones of different colors.

The invention further aims to ensure, if necessary, a better ergonomy, by facilitating the gripping of the food mold by the peripheral rim.

The invention further aims to increase, if necessary, the surface area heat exchange between the food mold and the atmosphere inside an oven.

To achieve these aims and others, the invention proposes a mold according to Claim 1.

According to another aspect, the invention proposes a method for producing such a food mold, said method comprising the following steps:

- providing a peripheral stiffening element, in the form of a continuous annular reinforcement, and, if necessary, one or more intermediate stiffening elements,

- applying, on a first face of the peripheral stiffening element, and, if necessary, on a first face of the intermediate stiffening element or elements, a first molding paste,

- heating under pressure the assembly of stiffening elements and first molding paste thus obtained in a first shaping mold producing an overmolding of the first face of the peripheral stiffening element and, if necessary, of the intermediate stiffening element or elements with the first molding paste, then leaving to cool,

- turning over the assembly of stiffening elements and first molding paste thus obtained, and arranging, on the second face of the stiffening element or elements, strips of a second molding paste with a volume equal to that of wall of the food mold to be produced,

- placing the assembly of stiffening elements and first molding paste and second molding paste thus obtained in a second shaping mold and heating it under pressure to produce a food mold body having one or more cells with flexible wall that are open on a common access face, the common access face being itself limited by a peripheral rim extending outwards, the peripheral stiffening element and, if necessary, the intermediate stiffening element or elements being entirely embedded in the molding paste, then leaving to cool.

By virtue of this method, the molding silicone paste is sure to surround the whole of the outer surface of the stiffening elements, without leaving any trace of blocking-off or irregularity apparent on the outer surface of the food mold thus produced.

The excellent quality of the total overmolding obtained guarantees the reliability of the use of the food mold in a microwave oven or in a dishwasher.

Furthermore, the arrangement of the strips of molding silicone paste can be performed relatively easily, which allows the automation thereof. In other words, the method for manufacturing the food mold can thus be entirely automated.

It should be noted that the wording “common access face” refers to the opening face leaving access to the inside of the cells.

According to one particular embodiment, wherein the food mold comprises supporting feet, the method is such that:

- the peripheral stiffening element initially comprises a continuous metal annular reinforcement integral with beginnings of metal protuberances,

- the first shaping mold includes housings receiving the beginnings of protuberances, preventing the overmolding thereof by the first molding paste during the heating under pressure of the assembly consisting of the peripheral reinforcement and the first molding paste,

- the second shaping mold comprises housings receiving the beginnings of protuberances, preventing the overmolding thereof by the molding paste during the heating under pressure of the assembly consisting of the peripheral reinforcement and the first and second molding pastes.

After the mold-stripping of the second shaping mold, complementary metal structures are fixed onto the beginnings of protuberances, producing the supporting feet.

The outer surface of the food mold thus produced bears no trace of blocking-off and no trace of irregularity.

In practice, the food mold body can be made of a silicone-based material, of food quality, whereas the stiffening element can be made of metal. Silicone-based

materials exhibit good properties of flexibility and of resistance to the temperatures generally used in food preparation. For its part, the metal forming the stiffening element confers great stiffness in a small volume.

The particular position of the peripheral stiffening element in the opposing gripping zones of the peripheral rim, in particular the fact that the periphery thereof remains set back from the outer edge of the peripheral rim, leaves a peripheral strip of material forming the food mold body remaining, said peripheral strip exhibiting a flexibility greater than that of the peripheral stiffening element, conferring a greater gripping softness which improves ergonomy. At the same time, said peripheral strip of material forming the food mold body exhibits a lower thermal inertia, facilitating the gripping at lower temperature when taken out of an oven.

Preferably, in the two opposing gripping zones of the peripheral rim, the top main face of the peripheral rim is oriented slightly outward, so that it is set back from the common access face.

In this way, the common access face forms the top surface of the food mold in use, considerably facilitating leveling operations for removing excess material from the cells. In particular, the leveling operations can be carried out rapidly and easily using a straight rule or blade.

The structure of the food mold body is reinforced by providing at least one intermediate stiffening element, joining opposing zones of the peripheral stiffening element, said intermediate stiffening element being entirely embedded in the material forming the top wall of the food mold body between adjacent cells.

Thus, the risks of a deformation of the food mold body during use is reduced, such that the common access face remains flat despite the potentially large size of the food mold.

In practice, the food mold according to the invention can advantageously have a rectangular outline, and in this case the intermediate stiffening element can join opposing zones of two long sides of the peripheral stiffening element.

In applications for collective cooking, the food mold body can advantageously having an outline whose length is approximately 60 cm and width is approximately 40 cm, with two intermediate stiffening elements joining respective opposing zones of the two long sides of the peripheral stiffening element, the intermediate stiffening elements being parallel to the short sides of the peripheral stiffening element and dividing the common access face into three transverse strips having mutually similar surface areas.

Such a food mold body then has a large size, and the professional applications of such a food mold demand a guaranteed excellent shape retention of the cells, whereas the large size of the food mold tends on the contrary to degrade the shape of the outline of the cells during the manufacturing of the food mold, because of the material shrinkage.

To further avoid such a deformation of the outlines of the cells, while avoiding the deformations of the flat common access face, the peripheral stiffening element can advantageously be produced in carbon steel and have a cross section of square shape, 6 mm by 6 mm.

Alternatively, in applications for collective cooking, the food mold body can advantageously have an outline whose length is approximately 40 cm and width is approximately 30 cm, with an intermediate stiffening element joining respective opposing zones of the two long sides of the peripheral stiffening element, the intermediate stiffening element being parallel to the short sides of the peripheral stiffening element, dividing the common access face into two transverse strips having mutually similar surface areas.

Such a food mold body then has a smaller size, suited to the shape of certain ovens present in collective kitchens.

In this case, to avoid the deformation of the outlines of the cells, while avoiding the deformations of the flat common access face, it is sufficient for the peripheral stiffening element to be produced in carbon steel and have a cross section of square shape, 4 mm by 4 mm.

According to one advantageous embodiment, the peripheral stiffening element is integral with protuberances extending perpendicularly to and away from the common access face, beyond the bottoms of the cells, to form supporting feet by which the food mold can rest on a bearing plane while keeping the bottoms of the cells away from the bearing plane.

In this way, the food mold can rest on the bottom of a convection oven, and the hot air can be circulated over the entire outer surface of the food mold to promote the heat exchange.

BRIEF DESCRIPTION OF THE DRAWINGS

Other objects, features and advantages of the present invention will emerge from the following description of particular embodiments, given in relation to the attached figures, among which:

- figure 1 is a plan view of flexible food mold according to a first embodiment of the present invention;
- figure 2 is a right side view of the food mold of figure 1, on a larger scale;
- figure 3 is a bottom view of the food mold of figure 1;
- figure 4 is a front view in cross section along the line A-A of the food mold of figure 1;
- figure 5 is a perspective view illustrating the constituent parts of the food mold of figure 1;
- figure 6 is a perspective view of the peripheral stiffening element of the food mold of figure 1;

- figure 6A is a partial cross-sectional view on a larger scale along the plane B-B of figure 6;
- figure 7 is a perspective view of a first shaping mold for the overmolding of the peripheral stiffening element of figure 6, to illustrate the method according to the invention;
- figure 8 is a perspective view of a second shaping mold for the production of the flexible food mold of figure 1, to illustrate the method according to the invention;
- figure 9 is a plan view of a flexible food mold according to a second embodiment of the present invention;
- figure 10 is a bottom view of the flexible food mold of figure 9;
- figure 11 is a front view in cross section along the line C-C of figure 9;
- figure 12 is a plan view of a flexible food mold which does not form part of the present invention;
- figure 13 is a front view of the flexible food mold of figure 12;
- figure 14 is a front view in longitudinal section along the line D-D of figure 12;
- figure 15 is a perspective view of a first shaping mold for the overmolding of the peripheral stiffening element of the flexible food mold of figure 12; and
- figure 16 is a perspective view of a second shaping mold for the production of the flexible food mold of figure 12.

DESCRIPTION OF PREFERRED EMBODIMENTS

The flexible food mold 1 according to a first embodiment illustrated in figures 1 to 5 is considered first of all.

In this embodiment, the flexible food mold 1 is a food mold for cooking or baking, and comprises a food mold body 2, having 24 identical cells such as the cell 3, distributed regularly on the surface of the food mold 1, in 4 rows and 6 columns. Each cell such as the cell 3 has a cylindrical shape with square outline in which the adjacent sides of the cell are perpendicular and flat. The cell 3 is limited by a bottom 3a and is open on an opening face 3b opposite the bottom 3a.

The opening faces such as the face 3b of all the cells are arranged on a flat common access face 4 which, during the use of the food mold, forms the top face of the food mold.

The common access face 4 is itself limited by a peripheral rim 5 extending radially outward, and itself comprising a top main face 5a, a bottom main face 5b, a free outer edge 5c and an inner edge 5d marking the boundary with the cell or cells 3.

As can be seen in figures 1 and 3, in this embodiment, the food mold 1 has a rectangular outline defined by two long sides 6 and 7 and two short sides 8 and 9. Also in this embodiment, the length of the food mold is approximately 60 cm, and its width is approximately 40 cm.

The food mold body 2 is produced in a silicone-based mold body material, conferring on the walls of the cells 3 a flexibility allowing their deformation during use, for mold-stripping of their content.

The peripheral rim 5 is provided with a peripheral stiffening element 10, visible in cross section in figure 4, and entirely visible in the exploded view illustrated in figure 5, and in figure 6. The peripheral stiffening element 10 is in the form of a continuous annular reinforcement 100, the cross section of which is illustrated on a larger scale in figure 6A. Thus, the peripheral stiffening element 10 is limited by an inner face 10a and an outer face 10b distanced from one another along a width L1, and limited by two main faces 10c and 10d distanced from one another along a thickness E. The width L1 is greater than or equal to the thickness E. In practice, for the indicated size of the food mold 1 in this embodiment, that is to say with a length of approximately 60 cm and a width of approximately 40 cm, the thickness E and the width L1 can be each approximately 6 mm.

In the food mold 1, the peripheral stiffening element 10 is positioned such that the main faces 10c and 10d are parallel to the common access face 4. Moreover, the

peripheral stiffening element 10 is produced in a metal exhibiting good mechanical rigidity properties, and is entirely embedded in the silicone-based mold body material. For that, the peripheral rim 5 has, at all points, a width greater than the width L1 of the continuous annular reinforcement 100 of the peripheral stiffening element 10, and its thickness is greater than the thickness E of the continuous annular reinforcement 100 of the peripheral stiffening element 10.

Along the short sides 8 and 9 of the food mold 1, the peripheral rim 5 has a greater width and forms two opposing gripping zones 11 and 12. In each of the two opposing gripping zones 11 and 12, the peripheral stiffening element 10 is edged externally by a respective peripheral strip 11a and 12a of material forming the food mold body 2. The peripheral strip 11a or 12a produces the increase in width of the gripping zone 11 or 12, and exhibits a flexibility significantly greater than that of the peripheral stiffening element 10.

In the embodiment illustrated in figure 4 in longitudinal cross section, it can be seen that the top main face 5a of the peripheral rim 5 is oriented slightly outward, such that it is set back from the common access face 4, and such that the gripping zones 11 and 12 extend slightly obliquely downward, that is to say toward the bottom 3a of the cells 3. In this way, the gripping of the food mold 1 is facilitated, during a horizontal pulling movement for example to take the food mold out of an oven: it is then sufficient to apply the end of fingers of a hand under a gripping zone 11 or 12, supporting the gripping zone 11 or 12 and pulling it toward the outside of the oven in order to slide the food mold 1 out of the oven (arrow F1).

Considering the embodiment of figures 1 to 6 again, it can be seen that the food mold 1 further comprises two intermediate stiffening elements 101 and 102, each joining two opposing zones of two long sides of the peripheral stiffening element 10. In practice, as illustrated in figure 6, the intermediate stiffening elements 101 and 102 join opposing zones of two long sides of the continuous annular reinforcement 100, being parallel to the short sides of the continuous annular

reinforcement 100. As will be understood from figures 1 and 3, the intermediate stiffening elements 101 and 102 divide the common access face 4 into three transverse strips having mutually similar surface areas, each of the transverse strips comprising 8 cells in the embodiment illustrated. In all cases, the intermediate stiffening elements 101 and 102 are also embedded in the mold body material.

As can be seen more distinctly in figure 6, in this embodiment, the peripheral stiffening element 10 is integral with beginnings of protuberances such as the beginning of protuberance 103, extending perpendicularly to and away from the top face intended to be closest to the common access face 4 in figures 1 to 5. The beginnings of protuberances 103 can for example be metal studs welded on the bottom face 10d of the continuous annular reinforcement 100. The square cross section of the continuous annular reinforcement 100 facilitates the welding operation. As illustrated in particular in figure 4, complementary metal structures 20 with U-shaped profile are fixed to the beginnings of protuberances 103, to form supporting feet 21.

The supporting feet 21 have a height slightly greater than the height of the cells 3, and are distributed at the periphery of the food mold 1, so that the food mold can rest on a bearing plane by the bottom end of the feet 21, the bottoms 3a of the cells 3 being away from the bearing plane. The circulation of hot air is thus favored over the entire surface of the cells 3 in an oven.

It will be understood, from figures 1 to 5, that the top main face of the food mold 1 is essentially coplanar with the common access face 4, which facilitates the leveling operations.

In the embodiment illustrated in figures 9 and 10, the food mold 1 has no supporting feet. This is again a mold for cooking or baking. The dimensions of this food mold 1 are smaller than those of the embodiment of figures 1 to 6, its length being approximately 40 cm and its width being approximately 30 cm.

Another difference lies in the presence of a single intermediate stiffening element 101, dividing the common access face into two transverse strips having mutually similar surface areas, the intermediate stiffening element 101 remaining parallel to the short sides of the peripheral stiffening element 10.

Another difference lies in the cross section of the peripheral stiffening element 10, of square shape, 4 mm by 4 mm.

Another difference lies in the inclination of the gripping zones 11 and 12: in this second embodiment, as can be seen in figure 11, the top main face of the peripheral rim is oriented slightly inward, so that it extends slightly above the common access face 4, and so that the gripping zones 11 and 12 extend slightly obliquely upward. This embodiment is more suited to gripping with two hands, each hand being applied under one of the gripping zones 11 or 12, bearing both upward and toward the center of the food mold (arrow F2).

In another embodiment which is not shown in the drawings, the food mold according to the invention is similar to those illustrated in figures 1-6 or 9-11, with the difference that it has a single cell, and no intermediate stiffening elements.

In all the embodiments, there is an advantage to be gained in producing the stiffening elements in a carbon steel, exhibiting great rigidity.

Regarding the mold body material, it is essentially composed of a silicone elastomer based on polydimethylsiloxane with vinyl bonds, hot vulcanized in the presence of vulcanizing agents, colorant and treatment agents.

The method for producing a food mold as defined previously is now considered, this method being illustrated in relation to figures 7 and 8.

In figure 7, a peripheral stiffening element 10 is first of all provided, having, if necessary, one or more intermediate stiffening elements 101 and 102, and this

peripheral stiffening element 10 is placed in a first shaping mold 30 comprising a bottom mold element 31 and a top mold element 32.

Strips of a first molding silicone paste, such as the strip 50 illustrated by dotted lines, are applied to a first face of the peripheral stiffening element 10, namely its top face illustrated in figure 7, to cover almost all of said top face. In the presence of intermediate stiffening elements 101 and 102, strips of the first molding silicone paste are also applied to these intermediate stiffening elements 101 and 102.

Next, the first shaping mold 30 is closed to vulcanize the first molding silicone paste 50 and pressurize the assembly of stiffening elements 10, 101, 102 and first silicone paste thus obtained, and this assembly is heated in the first shaping mold 30 to produce an overmolding of the peripheral stiffening element 10 and, if necessary, of the intermediate stiffening element or elements 101 and 102 with the first molding silicone paste 50.

A pressure of 70 to 80 kg per square centimeter can be satisfactory. Heating to 180°C for three minutes can be satisfactory, in the case of a cooking food mold whose outline has a size of 60 x 40 cm, and whose wall thickness is approximately 0.5 mm. A time and temperature adjustment will be able to made, as an increasing function of the thickness and of the size of the food mold to be produced.

After the opening of the first shaping mold 30 and cooling, the assembly of stiffening elements 10, 101, 102 and first molding paste 50 thus obtained is extracted from the first shaping mold 30, it is turned over and it is placed in a second shaping mold 40 illustrated in figure 8. This second shaping mold 40 comprises a base element 41, an intermediate element 42 and a top element 43. The first face of the peripheral stiffening element 10, overmolded by the first molding silicone paste 50, after turning over, is oriented downward against the base element 41 of the second shaping mold 40, whereas the second face of the peripheral stiffening element 10 is visible. The vulcanized first molding silicone

paste 50 supports the stiffening element or elements 10, 101, 102 and itself constitutes the element ensuring the positioning of the stiffening element or elements 10, 101, 102 in the second shaping mold 40.

As illustrated by the arrow 51, there are arranged, on the second face of the peripheral stiffening element 10, and, if necessary, of the intermediate stiffening elements 101, 102, strips of a second molding silicone paste 51, with a volume equal to that of the wall of the food mold to be produced. As can be seen in figure 8, the base element 41 comprises protuberances 44 intended to penetrate into corresponding openings of the intermediate element 42, so as to form the walls of the cells. The bottoms of the cells are formed by the top element 43 coming to face the tops of the protuberances 44 of the base element 41. The second shaping mold 40 is then closed, so as to heat under pressure the assembly of stiffening elements 10, 101, 102 and first molding paste 50 and second molding paste 51 and thus produce the food mold body with the cells and the peripheral rim in which the peripheral reinforcement 10 and, if necessary, intermediate stiffening elements 101, 102, is/are embedded. A pressure of 70 to 80 kg per square centimeter can be satisfactory. Heating to 180°C for three minutes can be satisfactory, in the case of a food mold whose outline has a size of 60 x 40 cm, and whose wall thickness is approximately 0.5 mm. A time and temperature adjustment will be able to be made, as an increasing function of the thickness and of the size of the food mold to be produced. The intermediate element 42 makes it easier to strip the mold, especially when the cells have a circular or polygonal cross section and a substantially cylindrical peripheral wall.

Figures 12-14 illustrate a food mold 1, in a form more especially appropriate for making ice cubes. The structure of that food mold 1 is similar to that of the above described embodiments, with several cells 3, and with a peripheral stiffening element 10 in the form of a continuous annular reinforcement 100 two portions of which can be seen in cross section in figure 14.

In figure 15, the peripheral stiffening element 10 is placed in a first shaping mold 30a comprising a bottom mold element 31a and a top mold element 32a, and

strips of a first molding silicone paste are applied to a first face of the peripheral stiffening element 10. After closing the first shaping mold 30a, the peripheral stiffening element 10 is overmolded by the first moulding silicone paste through heating.

After opening the first shaping mold 30a and cooling, the assembly of stiffening element 10 and first molding paste is turned over and it is placed in a second shaping mold 40a illustrated in figure 16. This second shaping mold 40a comprises a base element 41a having protuberances 44a, and a top element 43a, which is to say that it has no intermediate element. This kind of second shaping mold 40a is appropriate for cells having a slightly tapered shape, the mold-stripping of which is relatively easy. The remainder of the manufacturing process is as described above in connection with figure 8.

According to a first possibility, which can be used with all of the above described embodiments, the first molding paste 50 and the second molding paste 51 can be identical, so as to produce a food mold whose wall has an outer appearance that is uniform and of the same color.

Alternatively, the first molding paste 50 can differ from the second molding paste 51 at least by its color so as to produce a food mold whose wall has an outer appearance with two distinct colors: the common access face 4 then comprises a peripheral strip having the color and appearance of the first molding paste 50 in line with the peripheral stiffening element 10, with, if necessary, one or more intermediate strips having the color and appearance of the first molding paste 50 in line with each intermediate stiffening element 101 or 102, whereas the rest of the wall of the food mold has the color and appearance of the second molding paste 51.

It will be noted that, if the food mold 1 is to comprise supporting feet 21, as in the embodiment of figures 1 to 6, the first shaping mold 30 comprises housings receiving the beginnings of protuberances 103, preventing the overmolding thereof by the first silicone paste. Similarly, in this case, the intermediate element

42 of the second shaping mold 40 comprises housings receiving the beginnings of protuberances 103, to prevent the overmolding thereof by the second silicone paste. After mold-stripping of the second shaping mold 40, complementary metal structures 20 (figure 4) are fixed to the beginnings of protuberances 103 to produce the feet 21. This fixing can be ensured for example by gluing using a silicone glue.

It will be noted also that the food mold structure with supporting feet 21, as described previously and illustrated in relation to figures 2, 5 and 6, in itself constitutes an invention which is independent of the manufacturing process, and that the applicant reserves the right to protect through one or more divisional applications.

It will be noted finally that the particular food mold structure with flexible gripping zones 11, 12, as described previously and illustrated in relation to figures 4, 9, 10 and 11, in itself constitutes an invention independent of the manufacturing process, and that the applicant reserves the right to protect through one or more divisional applications.

The present invention is not limited to the embodiments which have been explicitly described, but includes the miscellaneous variants and generalizations thereof contained within the scope of the claims hereinbelow.

Patentkrav

1. Fødevareform (1),
- omfattende et fødevareformlegeme (2) af et formlegememateriale, der har flere celler (3) med fleksibel væg,
- hvor flere celler (3) er åbne langs en fælles adgangsflade (4),
- hvor den fælles adgangsflade (4) i sig selv har en perifer kant (5), der strækker sig radialt udad fra en indre kant (5d), der markerer grænsen med cellerne (3), og til en fri udvendige kant (5c),
- hvor den perifere kant (5) er forsynet med et perifert afstivningselement (10) i form af en kontinuerlig, ringformet forstærkning (100) med et eller flere mellemliggende afstivningselementer (101, 102),
hvor:
- det perifere afstivningselement (10) er helt indlejret i formlegemematerialet,
- det perifere afstivningselement (10) er kantet udvendigt langs mindst to gribezoner (11, 12) over for den perifere kant (5) ved hjælp af en perifer strimmel (11a, 12a) af materiale, der udgør fødevareformlegemet, hvor den perifere strimmel (11a, 12a) frembringer en forøgelse i bredden af gribezonerne (11, 12) og udviser en større fleksibilitet end fleksibiliteten af det perifere afstivningselement (10),
- omkring det perifere afstivningselement (10) er fødevareformlegemet fri for passager, der er frie eller blokeret mellem det perifere afstivningselement (10) og den udvendige overflade af fødevareformlegemet,
- formen (1) omfatter flere celler og derudover mindst ét mellemliggende afstivningselement (101, 102), der forbinder modstående zoner i det perifere afstivningselement (10) og er helt indlejret i materialet, der danner den øvre væg af fødevareformlegemet mellem tilstødende celler.

2. Fødevareform (1) ifølge krav 1, **kendetegnet ved, at** fødevareformlegemet (2) er fremstillet af et silikonebaseret materiale af fødevarekvalitet, hvorimod

det perifere afstivningselement (10) er fremstillet af metal.

3. Fødevareform (1) ifølge krav 1, **kendetegnet ved, at** den øverste hovedflade (5a) af den perifere kant (5) i de to modstående gribezoner (11, 12) af den perifere kant (5) er orienteret lidt udad, så den er trukket tilbage fra den fælles adgangsflade (4), og således at gribezonerne (11, 12) strækker sig lidt skråt nedad.

4. Fødevareform (1) ifølge krav 1, **kendetegnet ved, at** den øverste hovedflade (5a) af den perifere kant (5) i de to modstående gribezoner (11, 12) af den perifere kant (5) er orienteret lidt indad, så den strækker sig lidt over den fælles adgangsflade (4), og således at gribezonerne (11, 12) strækker sig lidt skråt opad.

5. Fødevareform (1) ifølge et hvilket som helst af kravene 1 til 4, **kendetegnet ved, at** fødevareformlegemet (2) har et rektangulært omrids, og **ved, at** det mindst ét mellemliggende afstivningselement (101, 102) forbinder modstående zoner på to lange sider af det perifere afstivningselement (10).

6. Fødevareform (1) ifølge krav 5, **kendetegnet ved, at** fødevareformlegemet (2) har et omrids, hvis længde er ca. 60 cm, og bredden er ca. 40 cm, med to mellemliggende afstivningselementer (101, 102), der forbinder de respektive modstående zoner af de to lange sider af det perifere afstivningselement (10), hvor de mellemliggende afstivningselementer (101, 102) er parallelle med de korte sider af det perifere afstivningselement (10) og deler den fælles adgangsflade (4) i tre tværgående strimler med indbyrdes lignende overfladearealer.

7. Fødevareform (1) ifølge krav 6, **kendetegnet ved, at** det perifere afstivningselement (10) har et kvadratisk tværsnit på 6 mm x 6 mm af kulstofstål.

8. Fødevareform (1) ifølge krav 5, **kendetegnet ved, at** fødevareformlegemet (2) har et omrids, hvis længde er ca. 40 cm, og bredden er ca. 30 cm, med et mellemliggende afstivningselement (101), der forbinder de respektive modstående zoner af de to lange sider af det perifere afstivningselement (10), hvor det mellemliggende afstivningselement (101) er parallelt med de korte sider af det perifere afstivningselement (10) og deler den fælles adgangsflade (4) i to tværgående strimler med indbyrdes lignende overfladearealer.

9. Fødevareform (1) ifølge krav 8, **kendetegnet ved, at** det perifere afstivningselement (10) har et kvadratisk tværsnit på 4 mm x 4 mm af kulstofstål.

10. Fødevareform (1) ifølge et hvilket som helst af kravene 1 til 9, **kendetegnet ved, at** det perifere afstivningselement (10) er integreret med fremspring (103, 20), der strækker sig vinkelret og væk fra den fælles adgangsflade (4) ud over bunden (3a) af cellerne (3) for at udgøre støttefødder (21), hvormed fødevareformen (1) kan hvile på et lejeplan, mens cellernes bund (3a) holdes væk fra lejeplanet.

11. Fremgangsmåde til fremstilling af en fødevareform (1) ifølge krav 1, **kendetegnet ved, at** den omfatter de følgende trin:
- tilvejebringelse af et perifert afstivningselement (10) i form af en kontinuerlig, ringformet forstærkning (100) med en første flade og en anden flade og om nødvendigt et eller flere mellemliggende afstivningselementer (101, 102), der forbinder modstående zoner af der perifere afstivningselement (10) og har en første flade og en anden flade,
- påføring en første støbemasse (50) på den første flade af det perifere afstivningselement (10) og på den første flade af det eller de mellemliggende afstivningselementer (101, 102),
- opvarmning under tryk af samlingen af afstivningselementer (10, 101, 102) - den således opnåede første støbemasse (50) i en første formgivningsform

(30), hvilket frembringer en afstøbning af den første flade af det perifere afstivningselement (10) og af det eller de mellemliggende afstivningselementer (101, 102) med den første støbemasse (50) og derefter afkøling,

- vending af samlingen af afstivningselementer (10, 101, 102) - den således opnåede første støbemasse (50) og anbringelse på den anden side af afstivningselementet eller -elementerne (10, 101, 102) af strimler af en anden støbemasse (51) i et volumen, der svarer til væggen af den fødevareform, der skal frembringes,

- anbringelse af samlingen af afstivningselementer (10, 101, 102) - den første støbemasse (50) - den således opnåede anden støbe (51) i en anden formgivningsform (40) og opvarmning deraf under tryk for at fremstille et fødevareformlegeme (2) med flere celler (3) med fleksibel væg, der er åbne langs en fælles adgangsflade (4), hvor den fælles adgangsflade (4) i sig selv er begrænset af en perifer kant (5), der strækker sig radialt udad, hvor det perifere afstivningselement (10) og om nødvendigt det eller de mellemliggende afstivningselementer (101, 102), der er helt indlejret i støbemassen (50, 51), og derefter afkøling.

12. Fremgangsmåde til fremstilling af en fødevareform (1) ifølge krav 11, hvor fødevareformen omfatter støttefødder (21), **kendetegnet ved, at**:

- det perifere afstivningselement (10) indledningsvis omfatter en kontinuerlig, ringformet metalforstærkning (100), der er integreret med begyndelser af metalfremspring (103),

- den første formgivningsform (30) omfatter huse, der modtager begyndelserne på fremspring (103), hvilket forhindrer afstøbning deraf med støbemassen under opvarmning under tryk af enheden, der består af det perifere afstivningselement (10) og den første støbemasse (50),

- den anden formgivningsform (40) omfatter huse, der modtager begyndelserne på fremspring (103), hvilket forhindrer afstøbning deraf med støbemassen under opvarmning under tryk af enheden, der består af det perifere afstivningselement (10) og den første og anden støbemasse.

13. Fremgangsmåde til fremstilling af en fødevareform (1) ifølge krav 12, hvor der efter udtagning ud af den anden formgivningsform (40) fastgøres komplementære metalstrukturer (20) på begyndelserne af fremspring (103), hvilket frembringer støttefødderne (21).

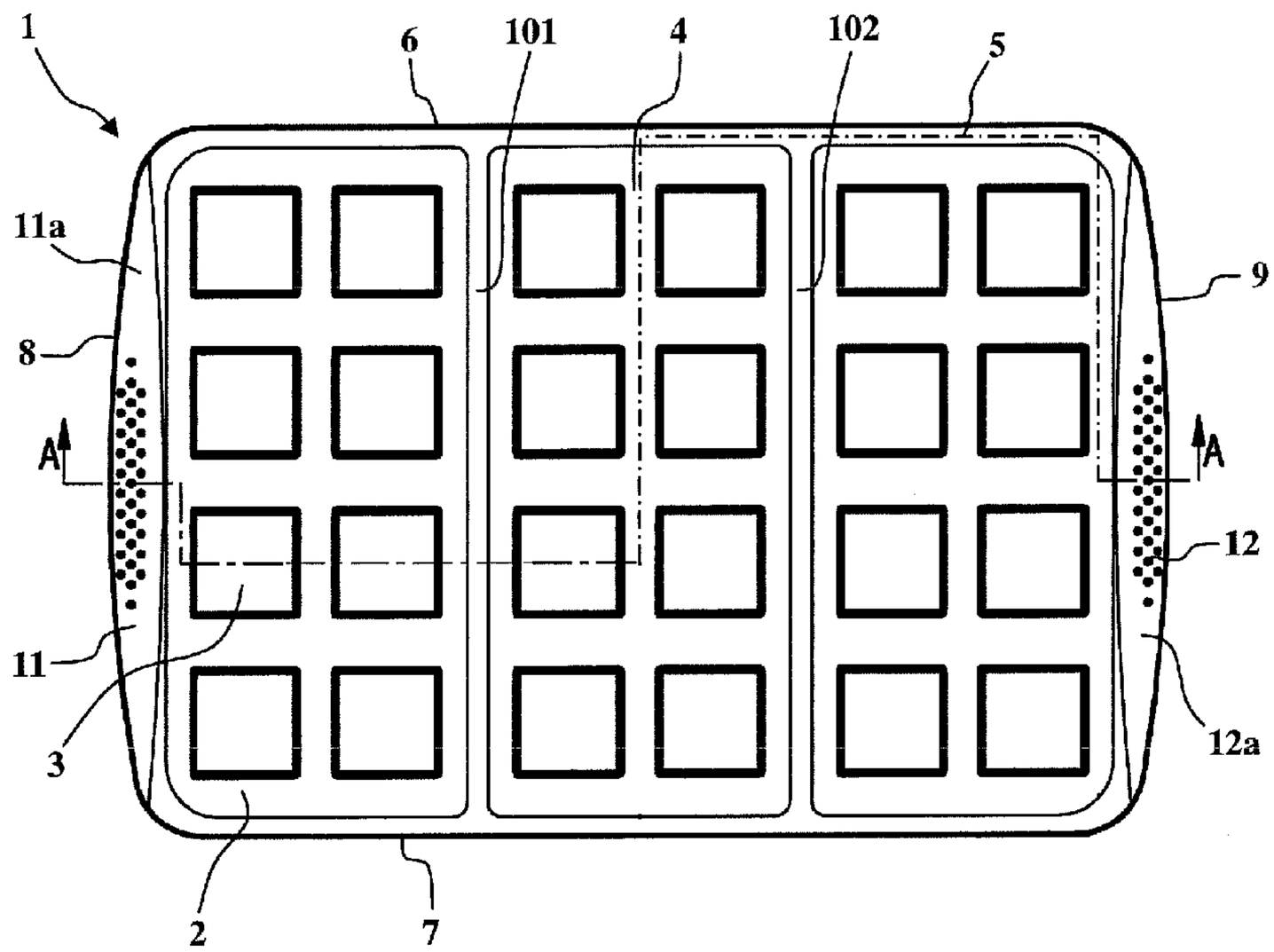

FIG. 1

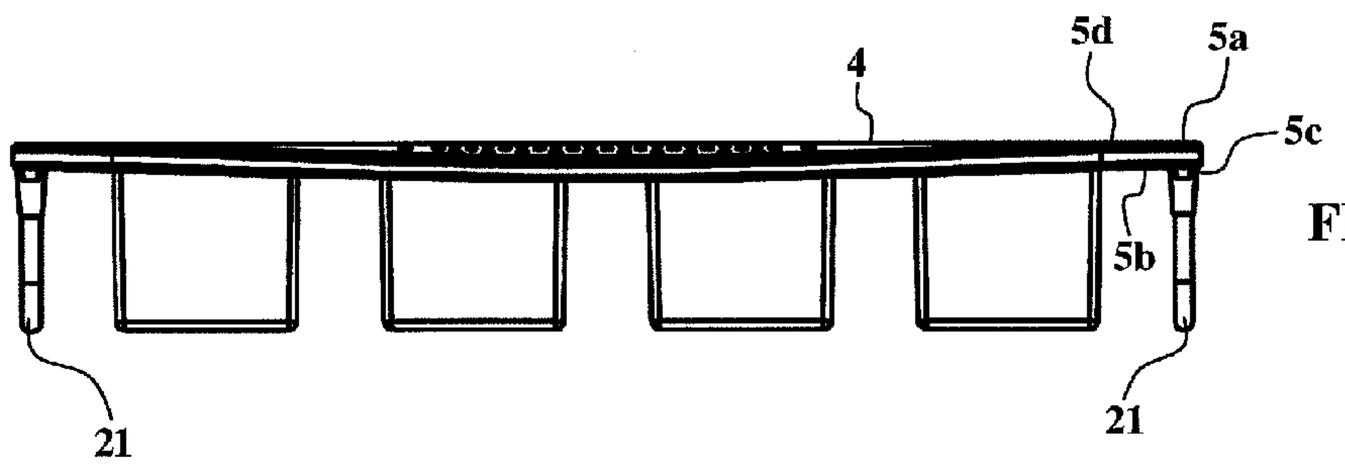

FIG. 2

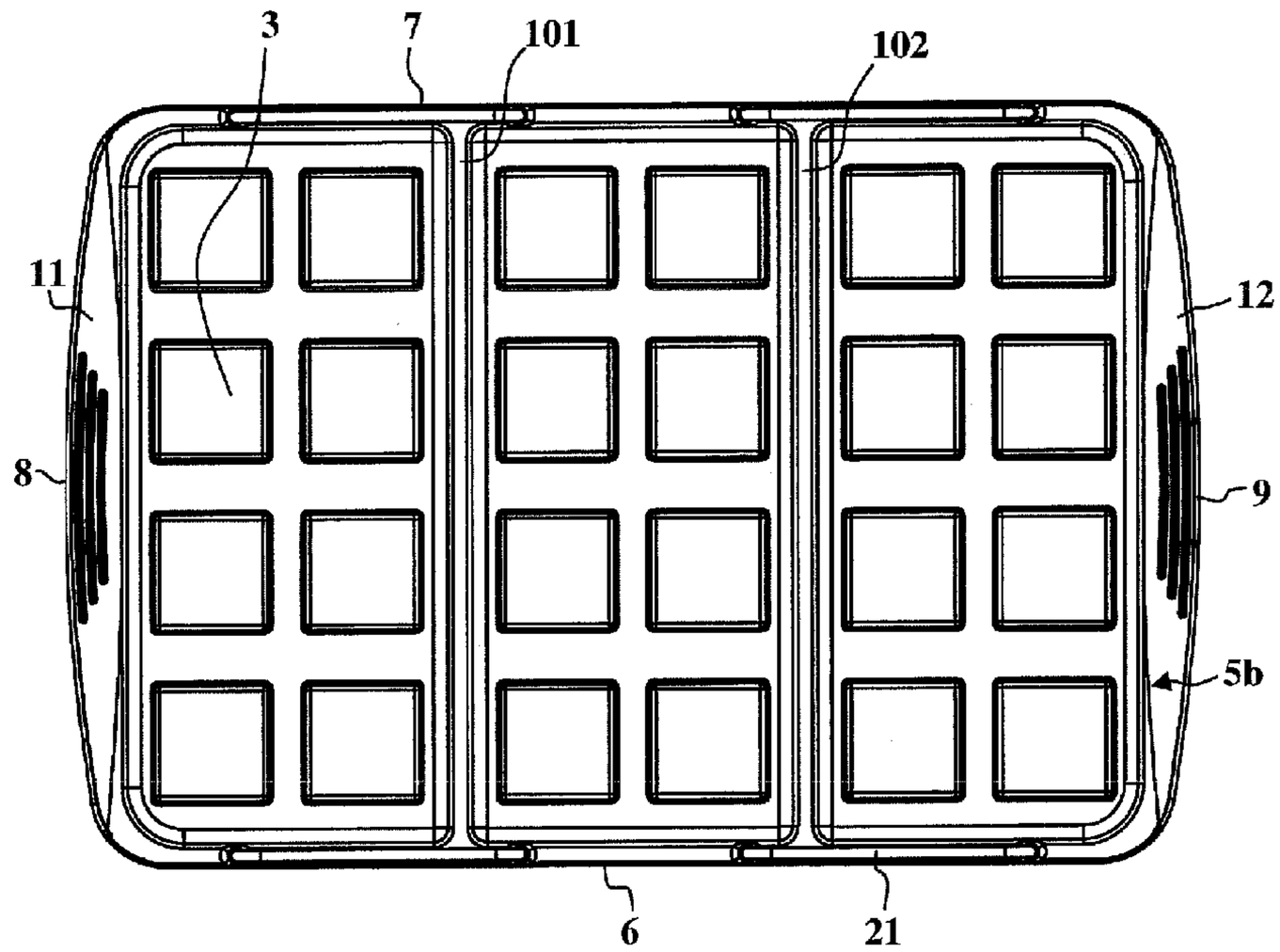
3
7
101
102
11
12
8
9
5b
6
21

FIG. 3

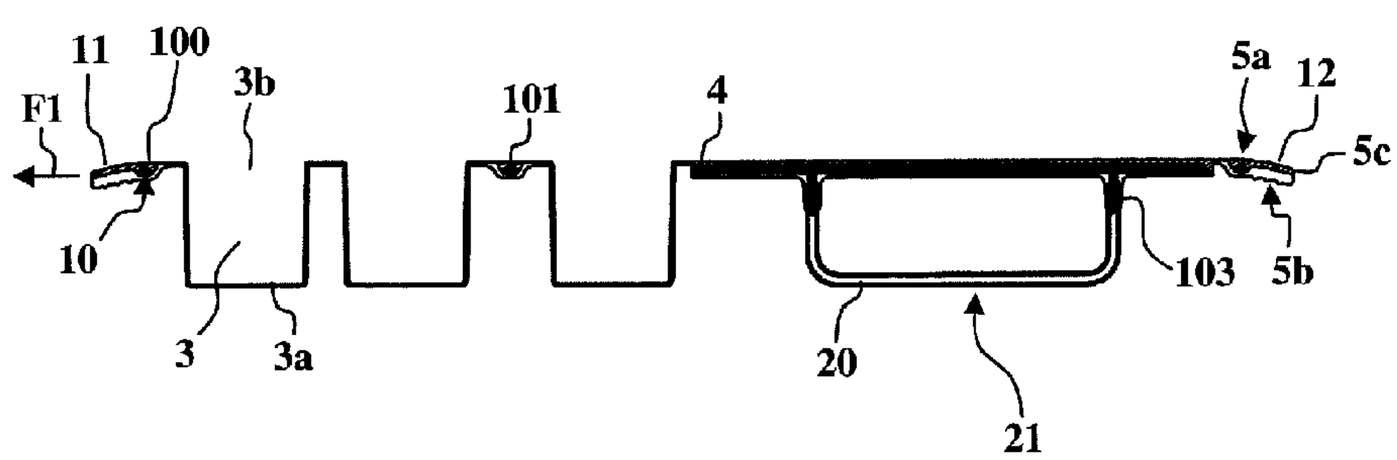
11
100
3b
F1
101
4
5a
12
5c
10
103
5b
3
3a
20
21

FIG. 4

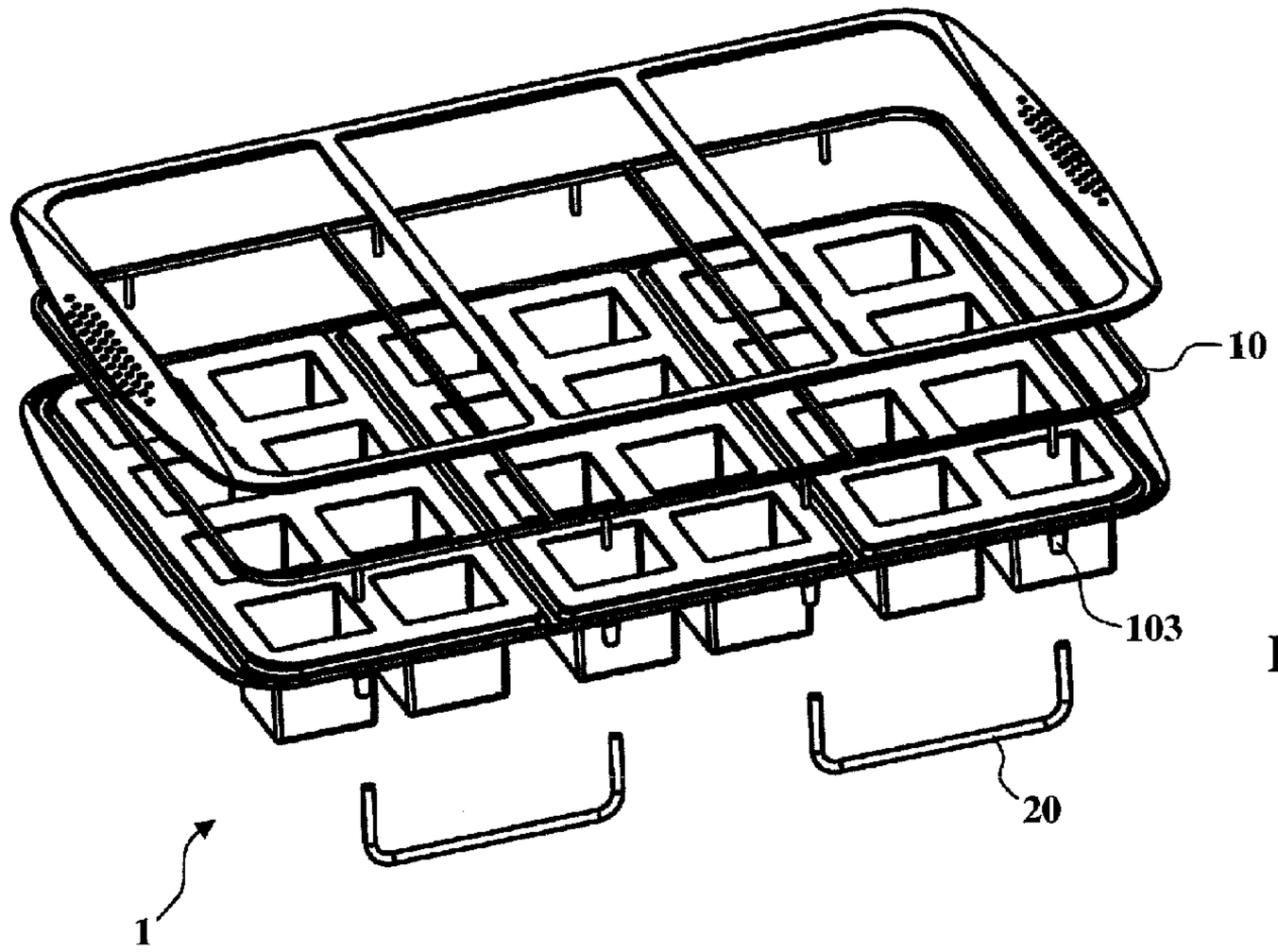

FIG. 5

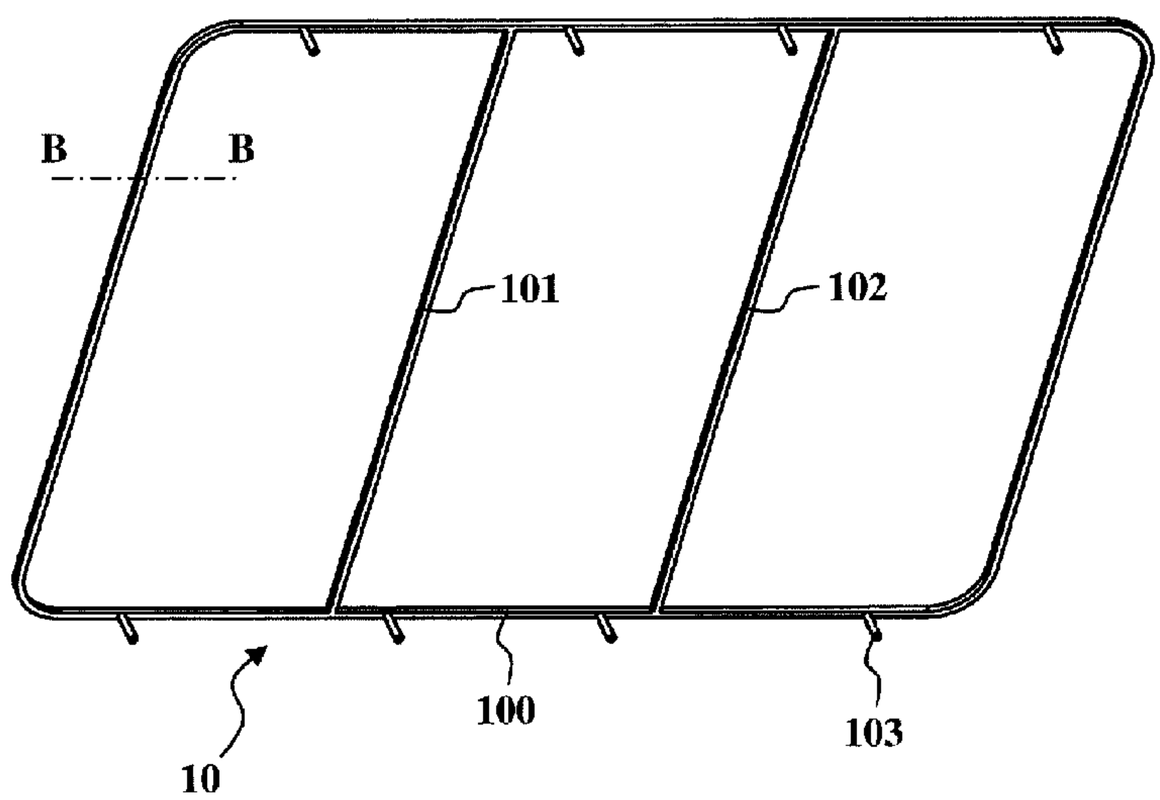

FIG. 6

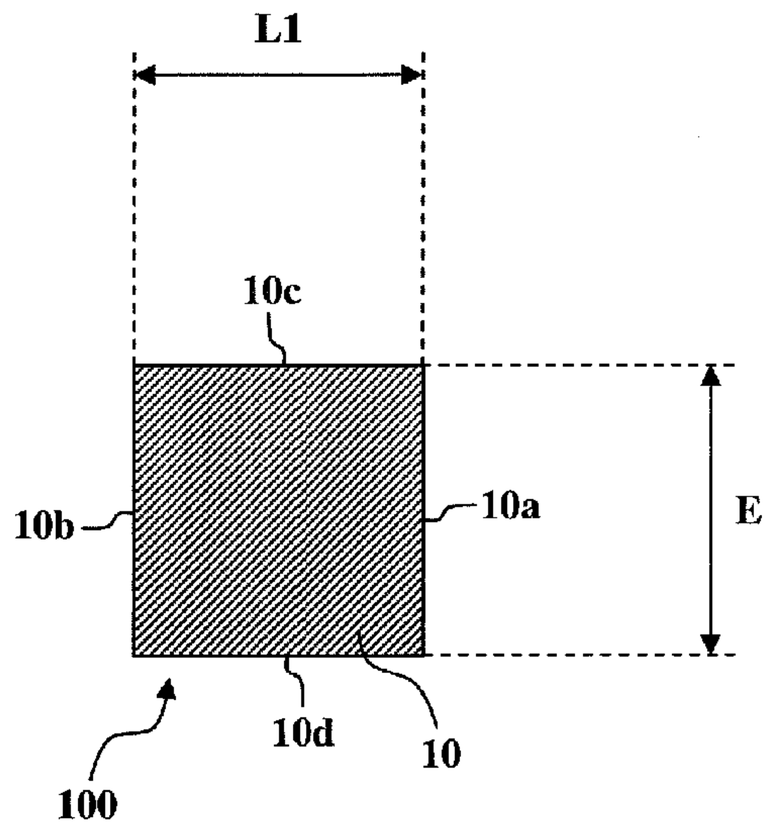

FIG. 6A

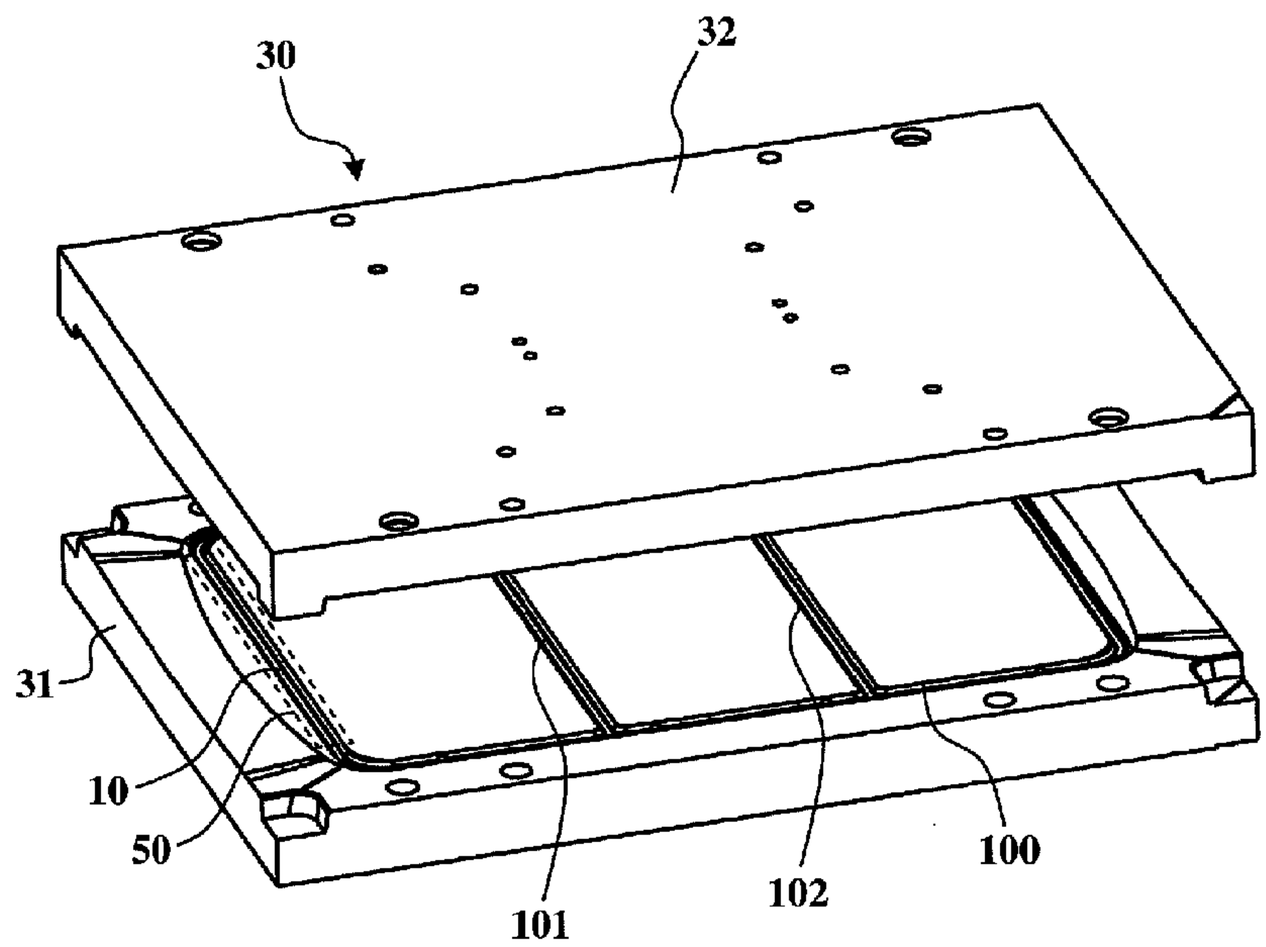

FIG. 7

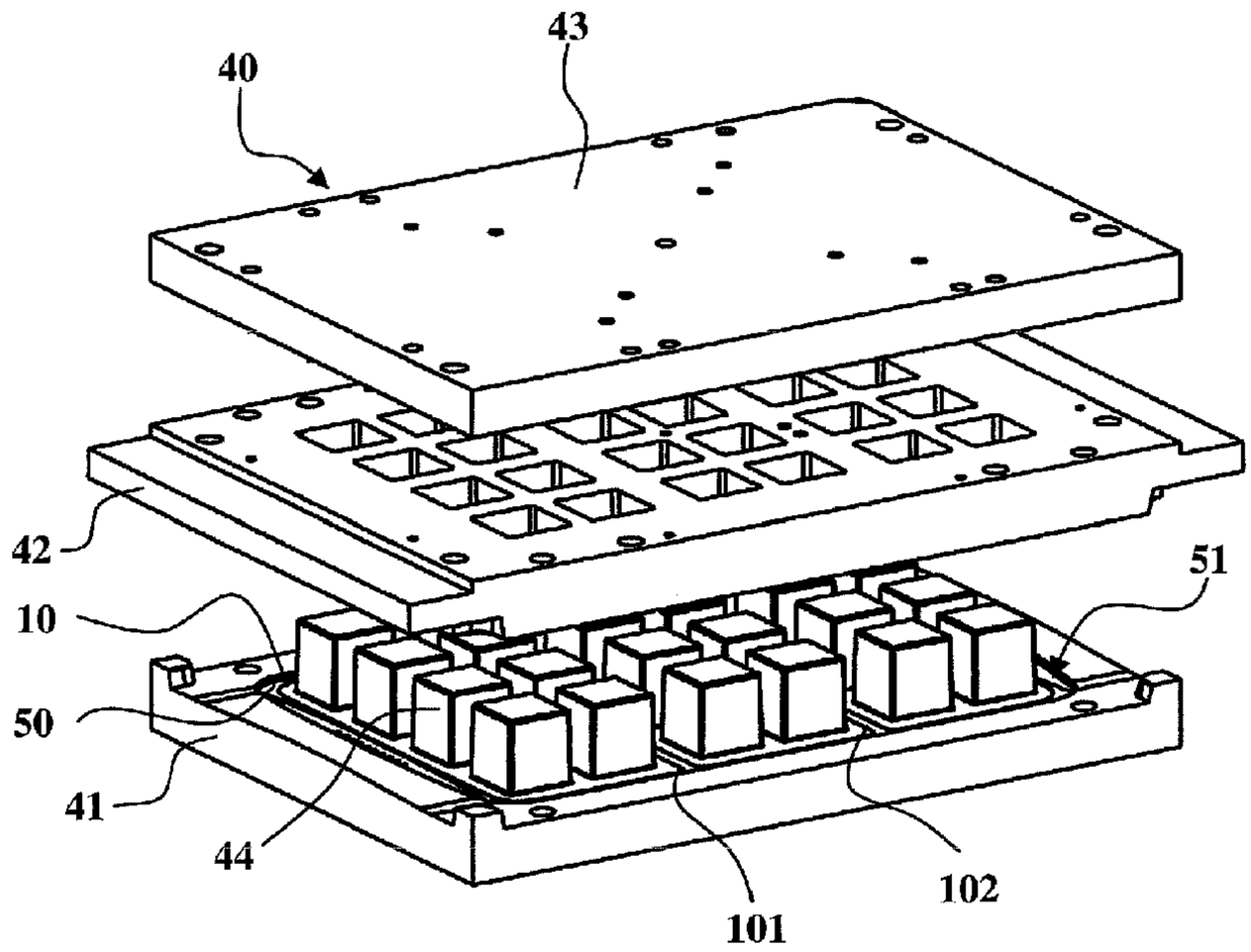

FIG. 8

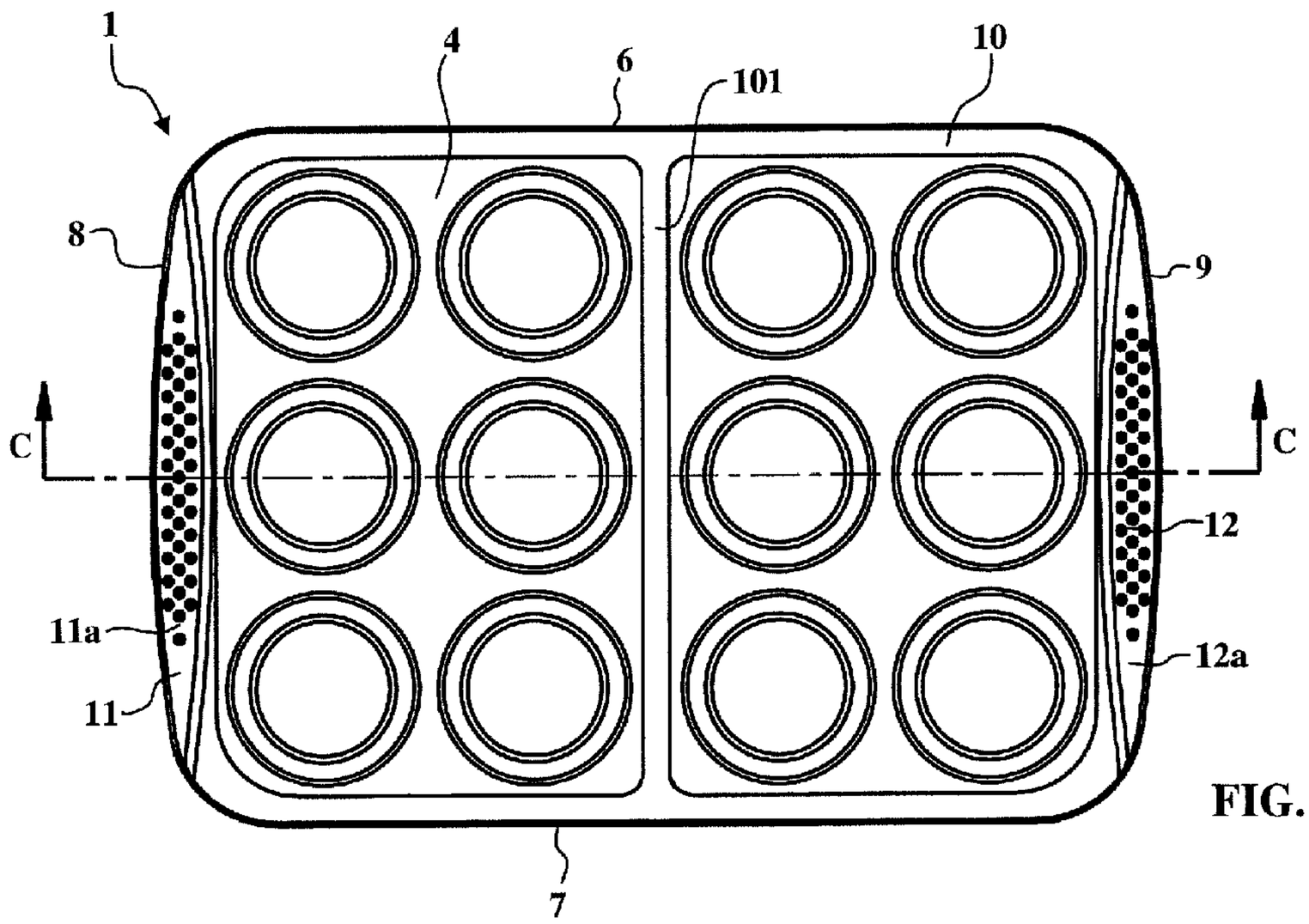

FIG. 9

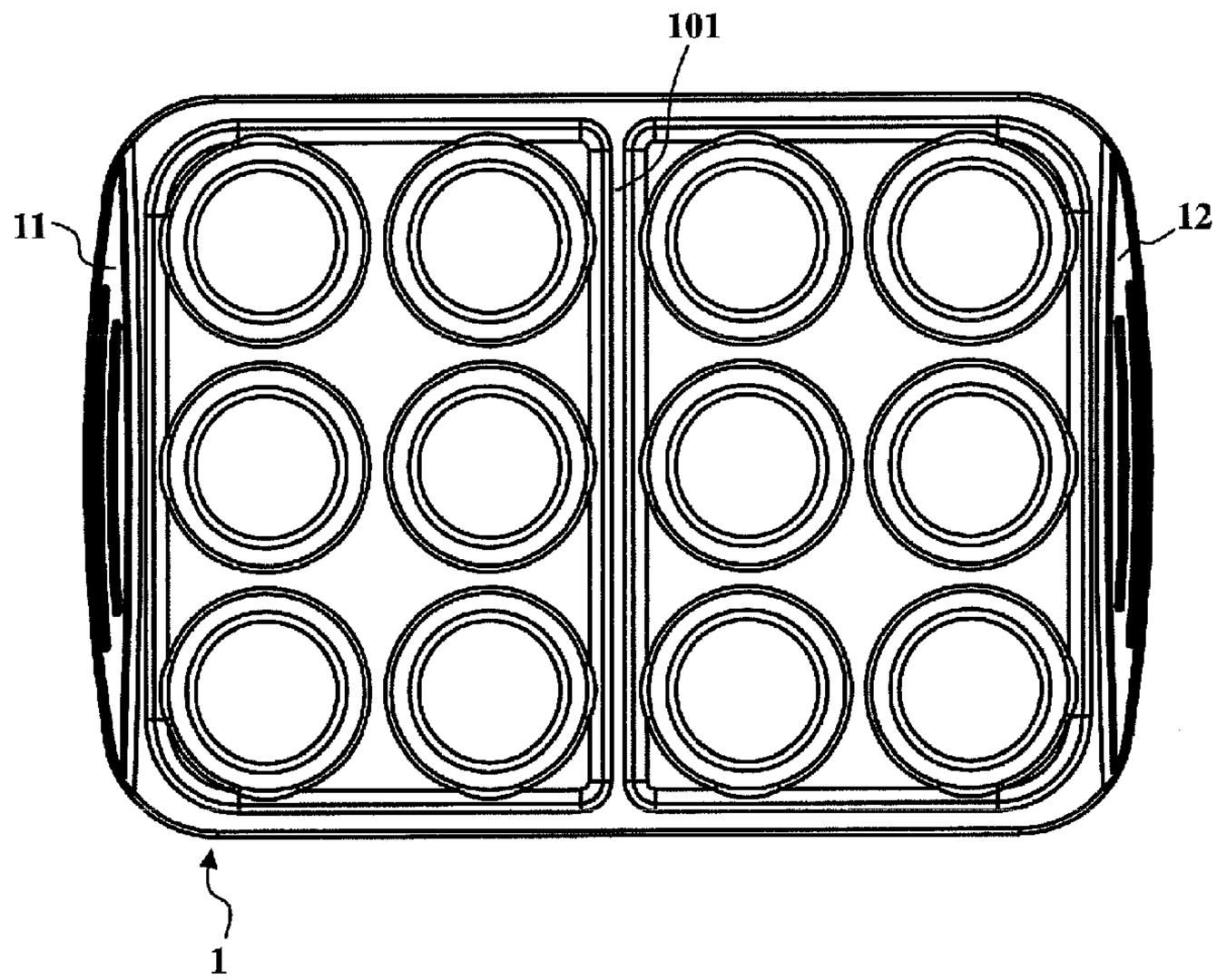

FIG. 10

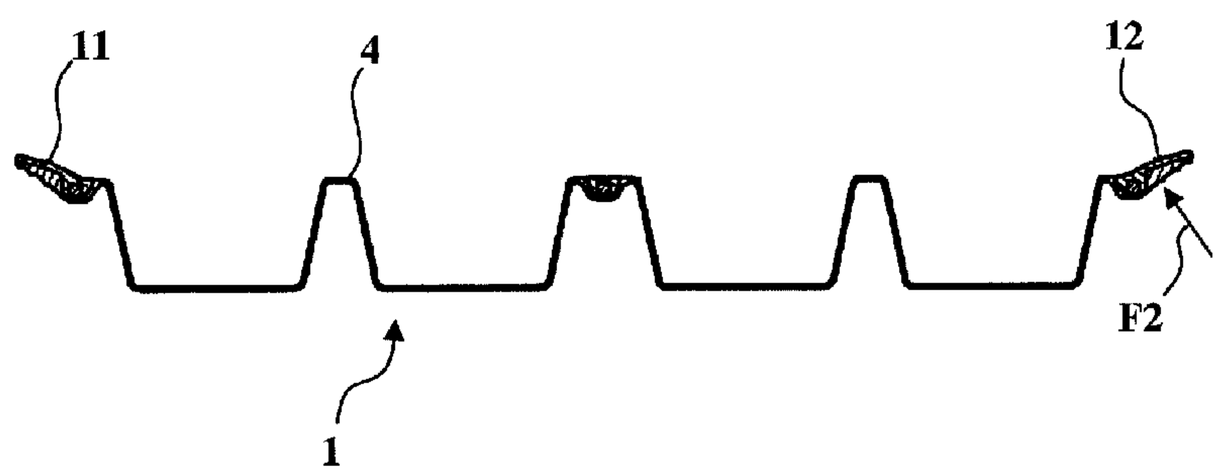

FIG. 11

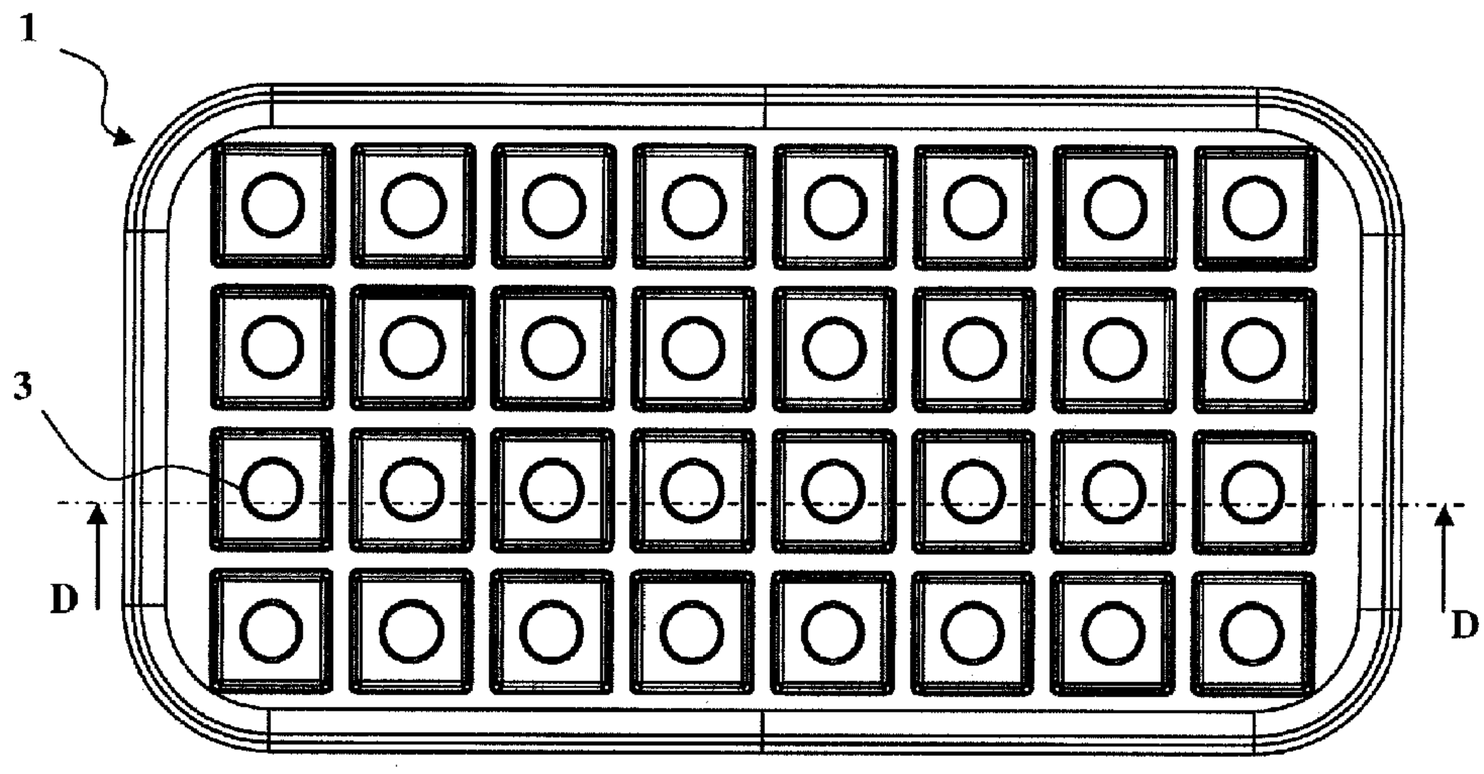

FIG. 12

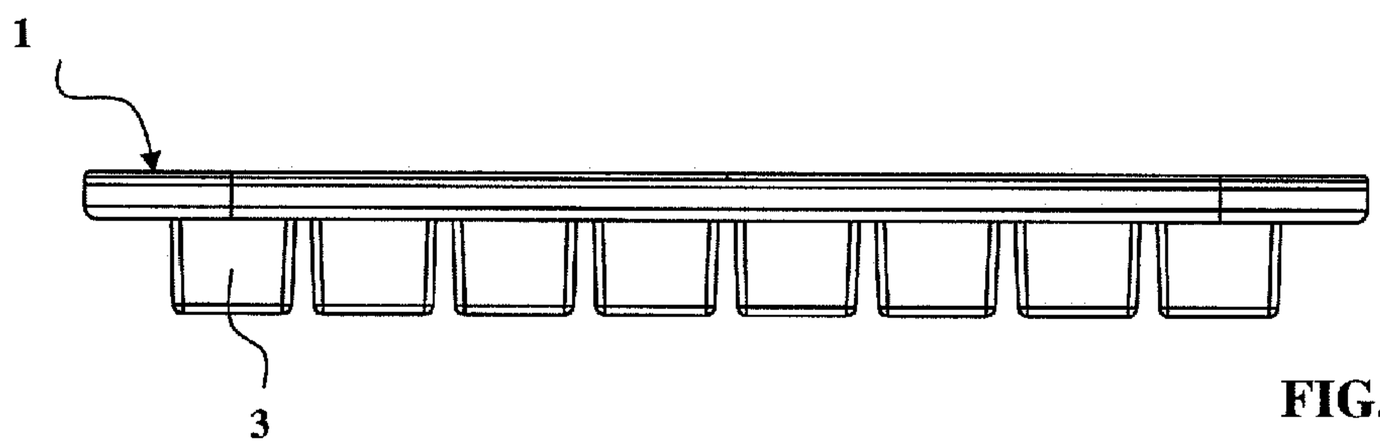

FIG. 13

FIG. 14

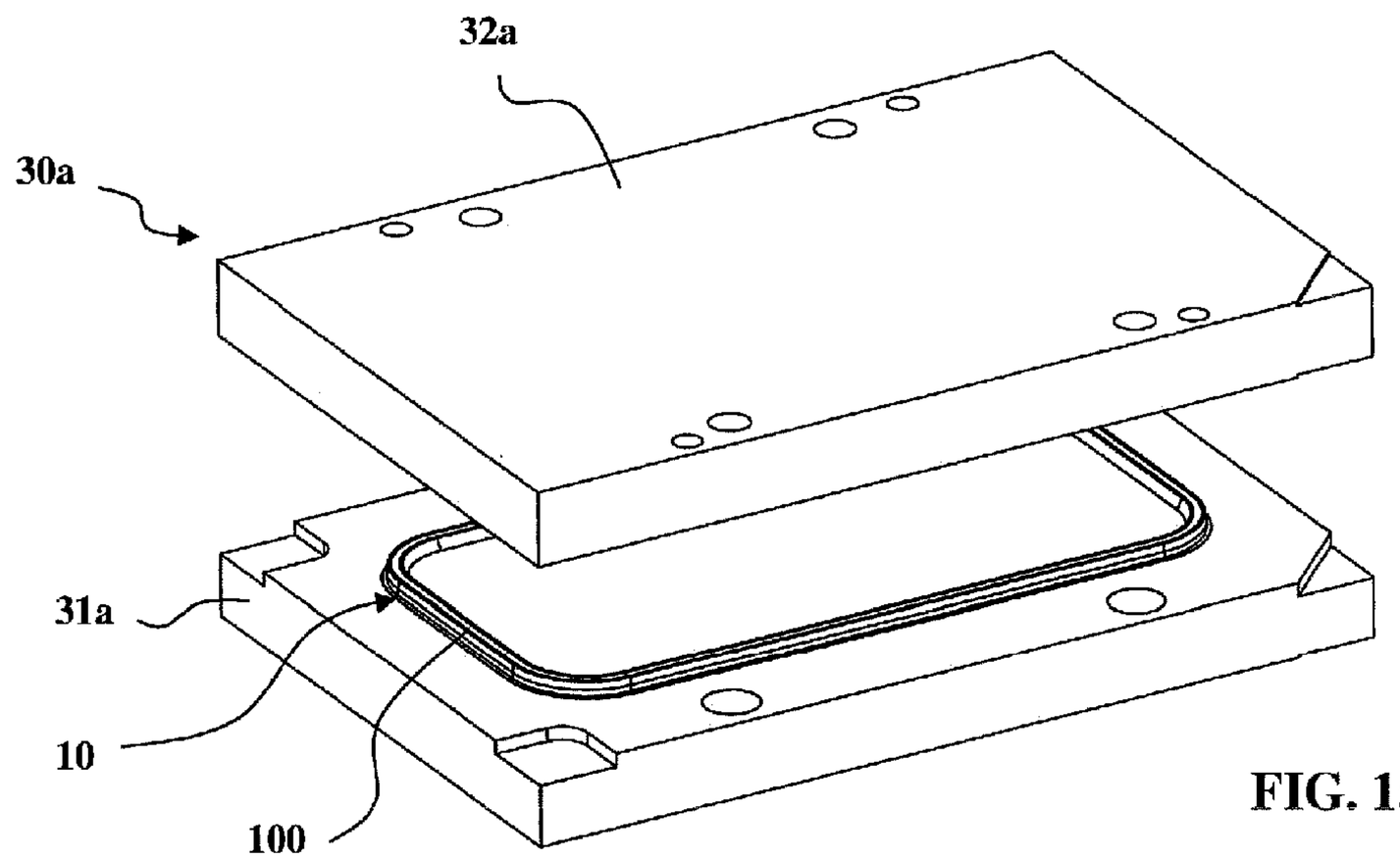

FIG. 15

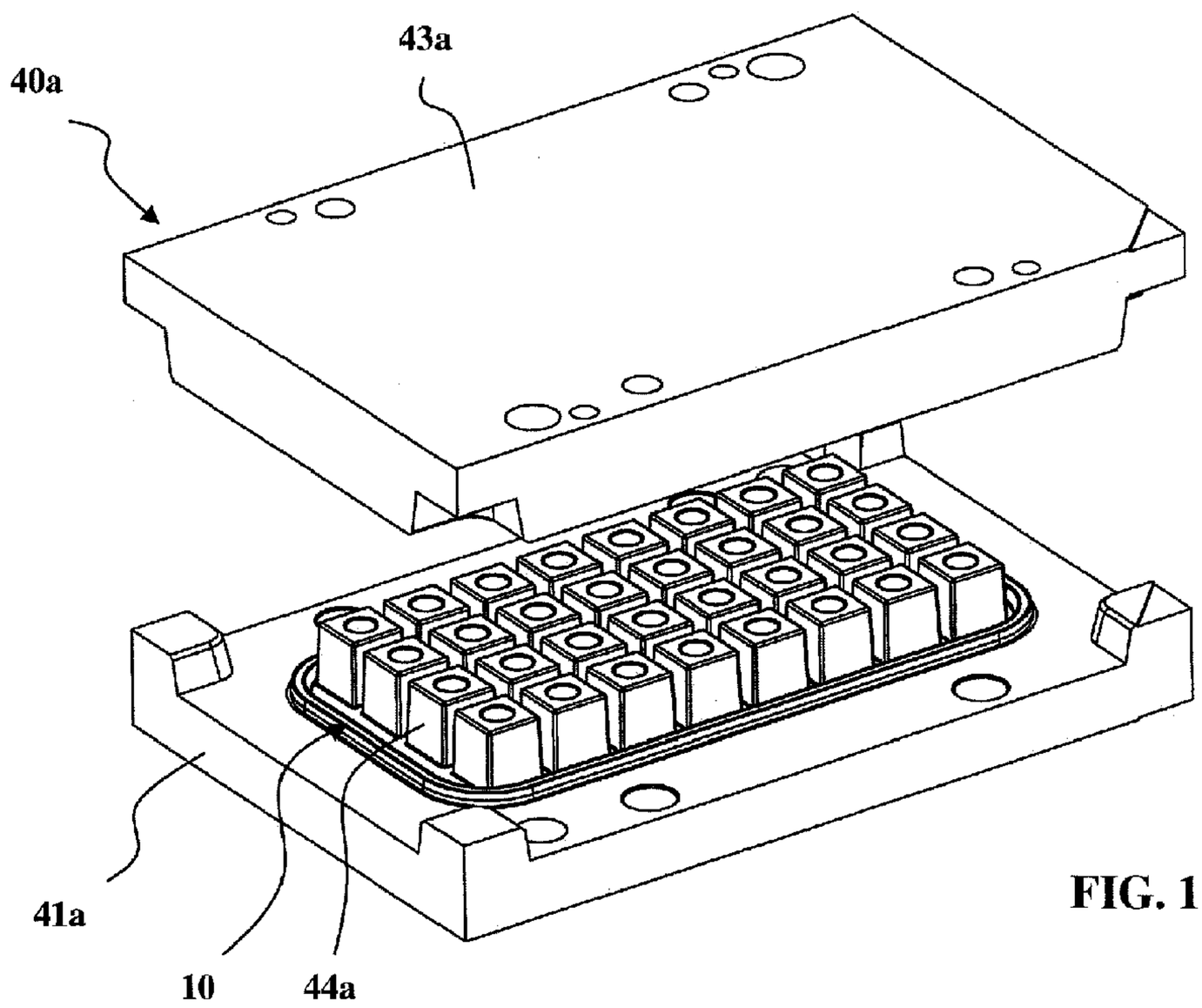

FIG. 16