Office de la Propriété Intellectuelle du Canada
Un organisme d'Industrie Canada

Canadian Intellectual Property Office
An agency of Industry Canada

CA 2755228 A1 2012/04/15

(21) 2 755 228

(12) DEMANDE DE BREVET CANADIEN
CANADIAN PATENT APPLICATION

(13) A1

(22) Date de dépôt/Filing Date: 2011/10/14

(41) Mise à la disp. pub./Open to Public Insp.: 2012/04/15

(30) Priorité/Priority: 2010/10/15 (US61/455,167)

(51) Cl.Int./Int.Cl. *B62D 25/22* (2006.01)

(71) Demandeur/Applicant:
MAGNA INTERNATIONAL INC., CA

(72) Inventeur/Inventor:
KOWALSKI, STEVEN MARTIN, US

(74) Agent: BRANDT, KERSTIN B.

(54) Titre : MARCHE-PIEDS MODULAIRE
(54) Title: MODULAR RUNNING BOARD

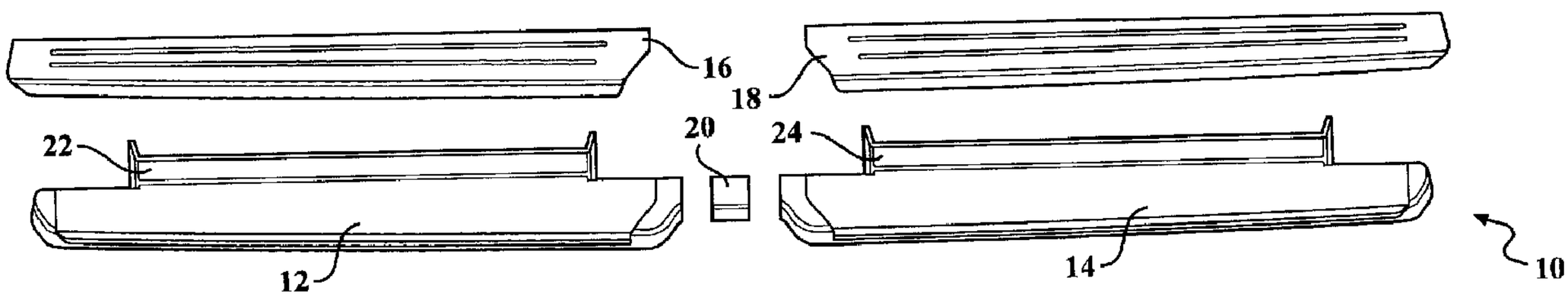

(57) Abrégé/Abstract:
A modular running board adaptable for use with various types of vehicles having different wheel bases. In a first embodiment, the running board includes a first long board and a second long board connectable to a pick-up truck having crew cab or quad cab with four full doors. In another embodiment, the first long board is connected to a short board, and both the long board and short board are connected to a pick-up truck having an extended cab, with two full doors and two half-doors. In either of the first two embodiments, a coupling piece is used for connecting the first long board to the second long board, or the first long board to the short board. In yet another embodiment, only the first long board is connected to a vehicle, such as a pickup truck having a regular cab with two full doors only.

709062CA

ABSTRACT

A modular running board adaptable for use with various types of vehicles having different wheel bases. In a first embodiment, the running board includes a first long board and a second long board connectable to a pick-up truck having crew cab or quad cab with four full doors. In another embodiment, the first long board is connected to a short board, and both the long board and short board are connected to a pick-up truck having an extended cab, with two full doors and two half-doors. In either of the first two embodiments, a coupling piece is used for connecting the first long board to the second long board, or the first long board to the short board. In yet another embodiment, only the first long board is connected to a vehicle, such as a pickup truck having a regular cab with two full doors only.

709062CA

MODULAR RUNNING BOARD

CROSS-REFERENCE TO RELATED APPLICATIONS

[0001] This application claims priority to U.S. Provisional Application No. 61/455,167 filed on October 15, 2010. The disclosure of the above application is incorporated herein by reference.

FIELD OF THE INVENTION

[0002] The present invention relates to a modular running board suitable for vehicles having different wheel bases.

BACKGROUND OF THE INVENTION

[0003] Running boards for vehicles are generally known, and are a popular accessory to attach to a vehicle because running boards both have functionality and can enhance the aesthetic appearance of a vehicle. Many types of running boards are designed specifically for trucks and sport-utility vehicles because these types of vehicles have a higher ride height compared to a car. However, the length of the wheel base for trucks and sport utility vehicles may vary. Trucks are manufactured with two conventional doors (commonly referred to as a "regular cab" design), two conventional doors and two second row half-doors (commonly referred to as an "extended cab" design), and four conventional doors (commonly referred to as a "quad cab" or "crew cab" design).

[0004] Vehicles having wheel bases of different lengths require running boards of different lengths to allow passengers entering and exiting

the vehicle through the various doors to use the running boards. However, most conventional running boards having a tubular or flat shape are manufactured to be suitable for one particular wheel base.

[0005] Accordingly, there exists a need for a running board which is suitable for use with different vehicles having wheel bases of different lengths.

SUMMARY OF THE INVENTION

[0006] The present invention is directed to a modular running board adaptable for use with various types of vehicles having different wheel bases. In a first embodiment of the present invention, the running board includes a first long board and a second long board connectable to a pick-up truck having crew cab or quad cab with four full doors

[0007] In another embodiment of the invention the first long board is connected to a short board, and both the long board and short board are connected to a pick-up truck having an extended cab, with two full doors and two half-doors. In either of the first two embodiments, a coupling piece is used for connecting the first long board to the second long board, or the first long board to the short board.

[0008] In yet another embodiment of the invention, only the first long board is connected to a vehicle, such as a pickup truck having a regular cab with two full doors only.

[0009] Further areas of applicability of the present invention will become apparent from the detailed description provided hereinafter. It should be understood that the detailed description and specific examples, while indicating the preferred embodiment of the invention, are intended for

purposes of illustration only and are not intended to limit the scope of the invention.

BRIEF DESCRIPTION OF THE DRAWINGS

[0010] The present invention will become more fully understood from the detailed description and the accompanying drawings, wherein:

[0011] Figure 1A is an exploded view of a running board, according to a first embodiment of the present invention;

[0012] Figure 1B is a side view of a running board, according to a first embodiment of the present invention;

[0013] Figure 2A is an exploded view of a running board, according to a second embodiment of the present invention;

[0014] Figure 2B is a side view of a running board, according to a second embodiment of the present invention;

[0015] Figure 3A is a side view of a vehicle having a running board, according to a first embodiment of the present invention;

[0016] Figure 3B is a top view of a vehicle having a running board, according to a first embodiment of the present invention;

[0017] Figure 3C is a top view of a running board with the modular step features removed, according to a first embodiment of the present invention;

[0018] Figure 4A is a side view of a vehicle having a running board, according to a second embodiment of the present invention;

[0019] Figure 4B is a top view of a vehicle having a running board, according to a second embodiment of the present invention;

[0020] Figure 4C is a top view of a running board with the modular step features removed, according to a second embodiment of the present invention;

[0021] Figure 5A is a side view of a vehicle having a running board, according to a third embodiment of the present invention;

[0022] Figure 5B is a top view of a vehicle having a running board, according to a third embodiment of the present invention; and

[0023] Figure 5C is a top view of a running board with the modular step feature removed, according to a third embodiment of the present invention.

DETAILED DESCRIPTION OF THE PREFERRED EMBODIMENTS

[0024] The following description of the preferred embodiment(s) is merely exemplary in nature and is in no way intended to limit the invention, its application, or uses.

[0025] Referring to Figures 1A-1B and Figures 3A-3C, a running board according to a first embodiment of the present invention is shown generally at 10. The running board 10 includes a first board, which in this embodiment is a first long board 12, and a second board, which in this embodiment is a second long board 14. A first modular step 16 is selectively connected to the first long board 12, and a second modular step 18 is selectively connected to the second long board 14. The modular steps 16,18 provide a stepping surface for the long boards 12,14 which may be stepped on when entering and exiting a vehicle. When assembled, the long boards

12,14 are selectively connected together through the use of a coupling piece 20.

[0026] Formed as part of the first long board 12 is a first flange 22, and formed as part of the second long board 14 is a second flange 24. The flanges 22,24 are used for providing a connection between the running board 10 and a vehicle, such as the vehicle, shown generally at 26. The first embodiment of the running board 10 of the present invention is suitable for a vehicle 26 having four doors 28. More particularly, when assembled to the vehicle 26, the first long board 12 is connected to the vehicle 26 such that the first long board 12 is used with one of the doors 28A, and the second long board 14 is used with one of the other doors 28B. Both long boards 12,14 are connected to the vehicle 26 through the use of the respective flanges 22,24. In this embodiment, the flanges 22,24 are connected to the frame of the vehicle 26, but it is within the scope of the invention that the flanges 22,24 may be connected to other parts of the vehicle 26 as well.

[0027] The modular steps 16,18 are detachable from the respective long boards 12,14, and may be equipped with gripping surfaces if desired to reduce the chance of a passenger slipping on the running board 10 when entering and exiting the vehicle.

[0028] Referring to Figures 2A-2B and 4A-4C, another embodiment of the running board 10 according to the present invention is shown, with like numbers referring to like elements. In this embodiment, the second board is a short board 30 which is suitable for connection with the first long board 12 with the same coupling piece 20 as mentioned in the first embodiment. The short board 30 also includes a second modular step in the form of a short

modular step 32; both the short board 30 and short modular step 32 are similar to the second long board 14 and the second modular step 18, with the exception that the short board 30 and short modular step 32 are shorter in length. The first long board 12 and the first modular step 16 are connected to a vehicle 34 having two doors 28 similar to the doors 28A of the vehicle 26 shown in Figures 3A and 3C, but the vehicle 34 shown in Figures 4A and 4B has two second row "half-doors" 36, and is referred to as having an extended cab. The short board 30 is suitable for connection with the vehicle 34 in proximity to the half-door 36, and there is a short board 30 on each side of the vehicle 34 as shown in Figures 4A and 4B.

[0029] The short modular step 32 is also selectively connectable to the short board 30 in a similar manner to the modular steps 16,18 and the long boards 12,14 of the first embodiment. The short board 30 also has short flanges 38 which are used for connecting the short board 30 to the vehicle 34.

[0030] A third embodiment of the present invention is shown in Figures 5A-5C, with like numbers referring to like elements. In this embodiment, the first long board 12 is connected to a vehicle 40 having only two doors 28; more specifically, the vehicle 40 is a "regular cab" pickup truck. Again, the flange 22 is used to connect the first long board 12 to the vehicle 40 in a similar manner as compared to the first two embodiments.

[0031] The modular running board 10 of the present invention allows for a single type of running board system to have interchangeable connecting parts for use with different vehicles having different wheel bases. The first long board 12 may be connected to the second long board 14 or the short board 30 using the same coupling piece 20. The first long board 12 is

then usable with either the second long board 14 or the short board 30 to provide a running board for a vehicle with different wheelbase lengths. Furthermore, the first long board 12 may be used independently for attachment to a vehicle to provide a stepping surface for entering and exiting a vehicle.

[0032] The description of the invention is merely exemplary in nature and, thus, variations that do not depart from the essence of the invention are intended to be within the scope of the invention. Such variations are not to be regarded as a departure from the spirit and scope of the invention.

709062CA

CLAIMS

What is claimed is:

1. A modular running board assembly, comprising:

a first long board selectively connected to a vehicle; and

at least one modular step selectively connected to said first long board in proximity to a door of said vehicle, said at least one modular step operable for providing a stepping surface for said first long board.

2. The modular running board assembly of claim 1, further comprising a first flange integrally formed as part of said first long board, said first flange connected to said vehicle.

3. The modular running board assembly of claim 1, further comprising:

a coupling piece; and

a second long board selectively connected to said vehicle in proximity to a second door, said second long board selectively connected to said first long board by said coupling piece.

4. The modular running board assembly of claim 3, further comprising a second modular step selectively connected to said second long board, said second modular step operable for providing a stepping surface for said second long board.

5. The modular running board assembly of claim 3, further comprising a second flange integrally formed as part of said second long board, said second flange connected to said vehicle in proximity to said second door.

6. The modular running board assembly of claim 1, further comprising:

a short board selectively connected to said vehicle;

a short modular step selectively connected to said short board, said short modular step operable for providing a stepping surface for said short board; and

a coupling piece, said short board selectively connected to said first long board by said coupling piece.

7. The modular running board assembly of claim 6, further comprising a half-door connected to said vehicle, said short board being connected to said vehicle in proximity to said half-door.

8. The modular running board assembly of claim 6, further comprising a short flange integrally formed as part of said short board, said short board connected to said vehicle by said short flange.

9. A modular running board assembly connected to a vehicle, comprising:

a first long board;

a first modular step selectively connected to said first long board, said first modular step providing a stepping surface for said first long board; and

a first flange integrally formed as part of said long board, said first flange connected to said vehicle such that said first long board is located in proximity to a first door.

10. The modular running board assembly connected to a vehicle of claim 9, further comprising:

a coupling piece;

a second long board connected to said first long board with said coupling piece;

a second flange integrally formed as part of said second long board, said second long board connected to said vehicle in proximity to a second door with said second flange; and

a second modular step selectively connected to said second long board, said second modular step operable for providing a stepping surface for said second long board.

11. The modular running board assembly connected to a vehicle of claim 9, further comprising:

a short board;

a short modular step selectively connected to said short board for providing a stepping surface for said short board;

a coupling piece connecting said short board to said first long board; and

a short flange integrally formed as part of said short board, said short flange connecting said short board to said vehicle in proximity to a half-door.

12. A modular running board assembly connected to a vehicle having one or more doors, comprising:

a first board;

a first flange integrally formed as part of said first board, said first flange connects said first board to a vehicle in proximity to a first door;

a first modular step connected to said first board for providing a stepping surface;

a second board;

a second flange integrally formed with said second board, said second flange connecting said second board to said vehicle in proximity to a second door;

a coupling piece operable for connecting said first board to said second board; and

a second modular step connected to said second board for providing a stepping surface;

wherein said first board and said second board facilitate the entry and exit of said vehicle.

13. The modular running board assembly connected to a vehicle having one or more doors of claim 12, said first board further comprising a first long board, said second board further comprising a second long board.

14. The modular running board assembly connected to a vehicle having one or more doors of claim 12, further comprising:

said first board is a first long board having said first flange connected to said vehicle in proximity to said first door;

said second board is a short board, said first long board connected to said short board with said coupling piece;

said second modular step is a short modular step connected to said short board, said second modular step providing a stepping surface for said short board;

said second flange is a short flange formed as part of said short board; and

one of said vehicle doors is a half-door, said short flange connected to said vehicle in proximity to said short door;

wherein said first long board and said short board provide a stepping function when entering and exiting said vehicle.

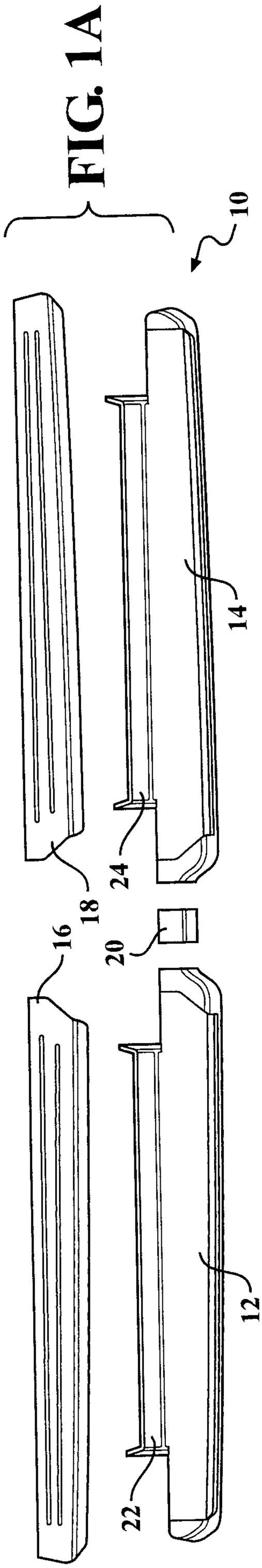

FIG. 1A

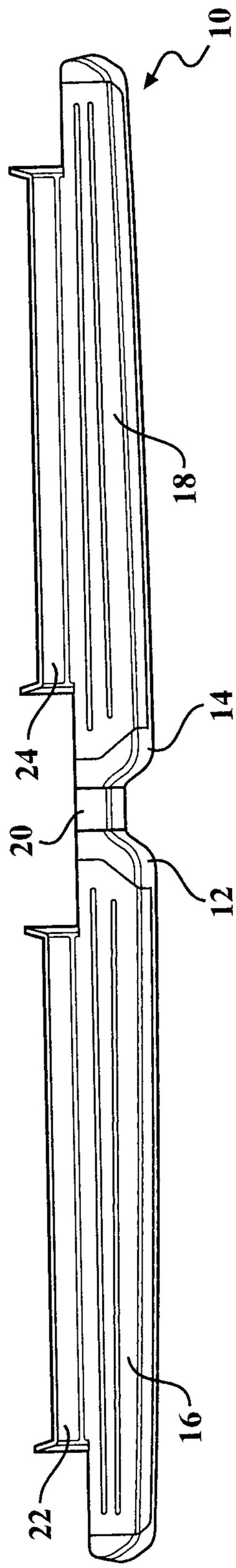

FIG. 1B

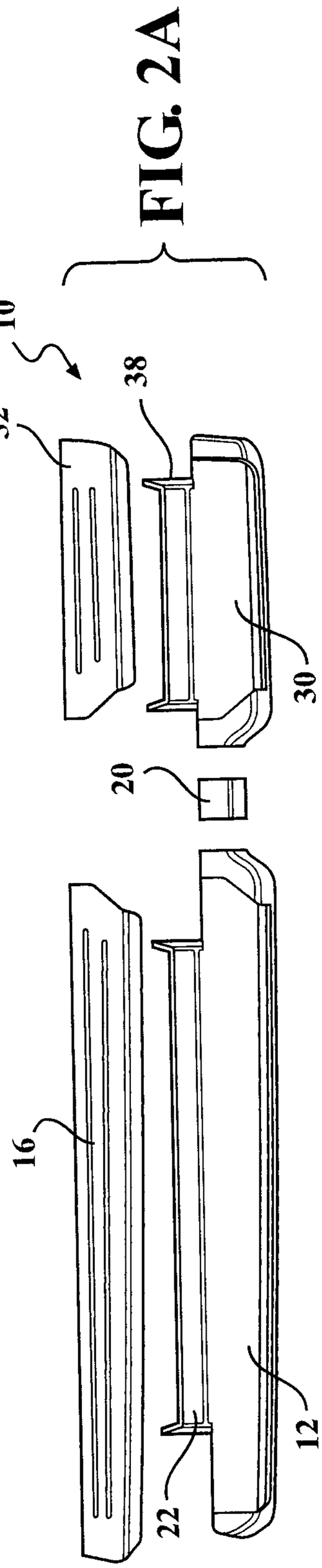

FIG. 2A

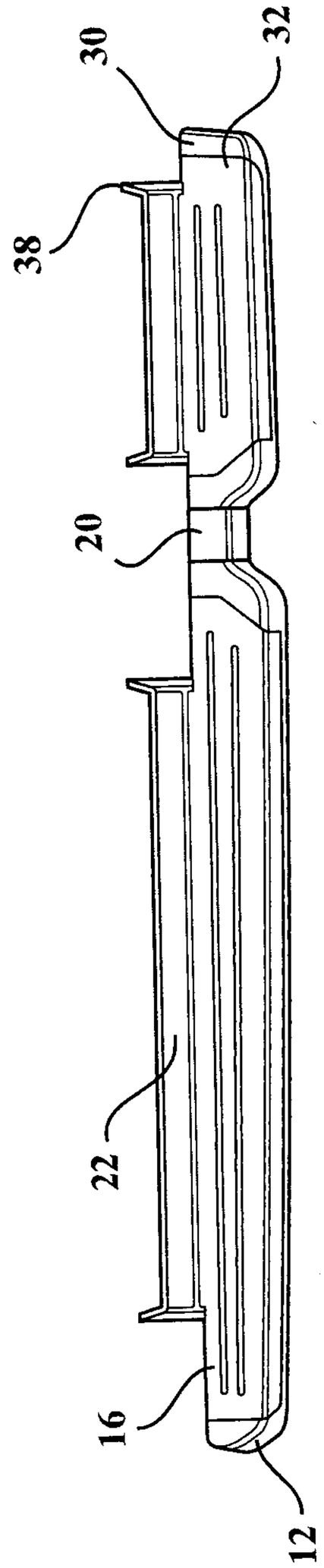

FIG. 2B

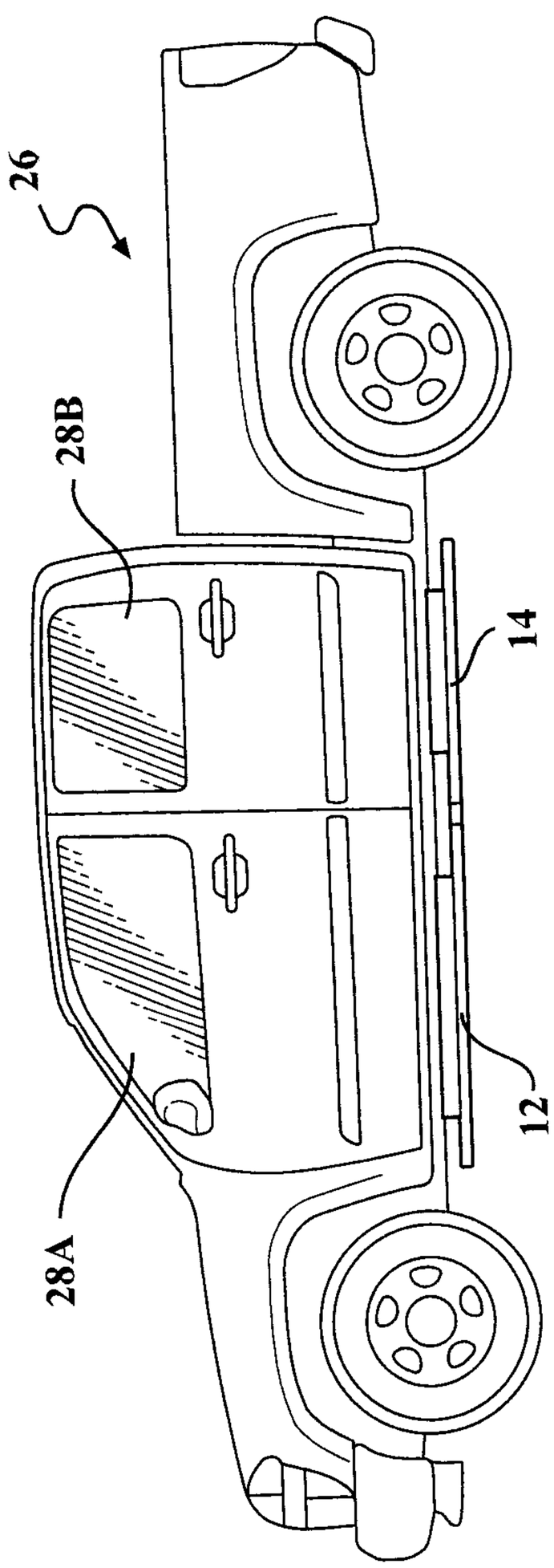

FIG. 3A

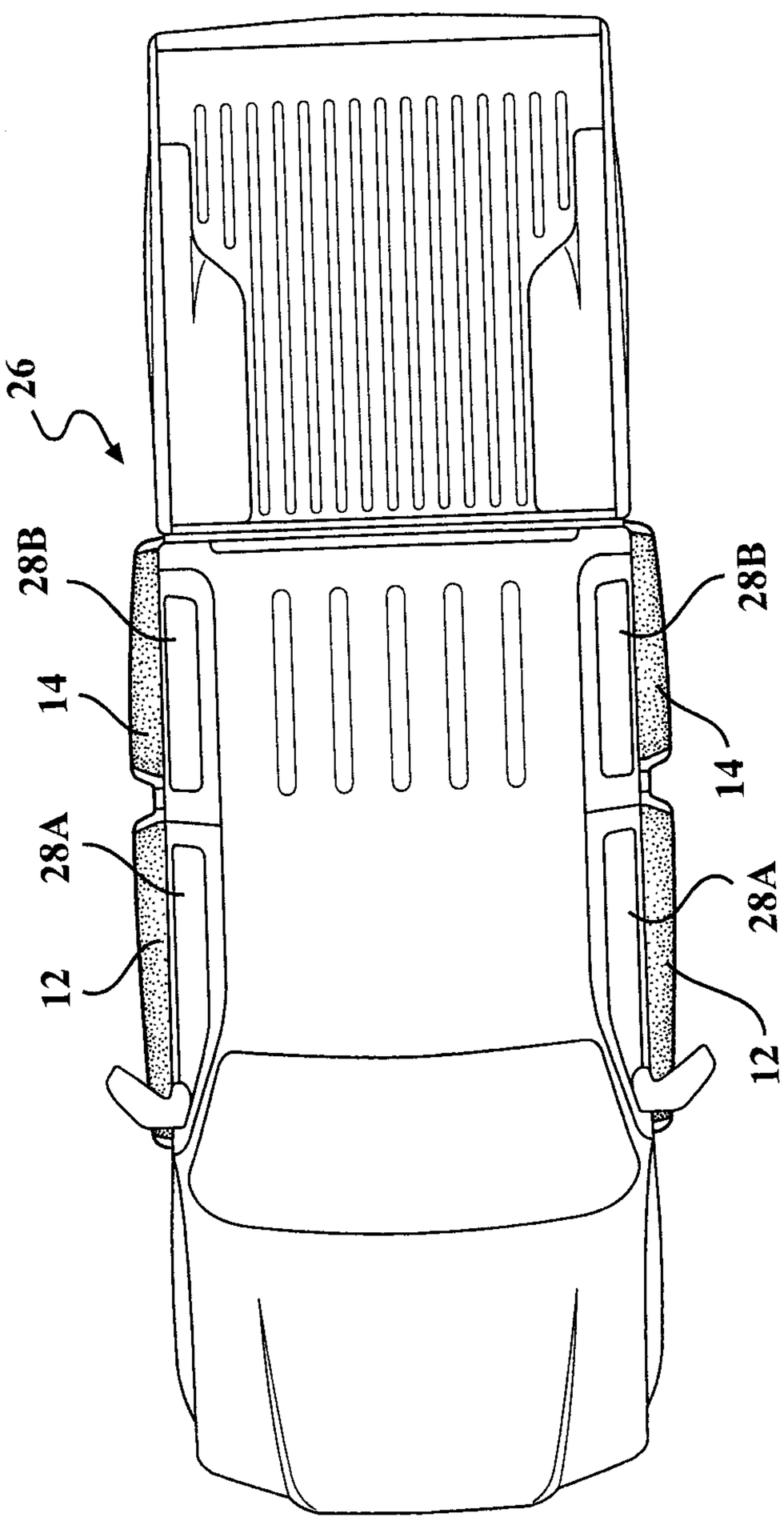

FIG. 3B

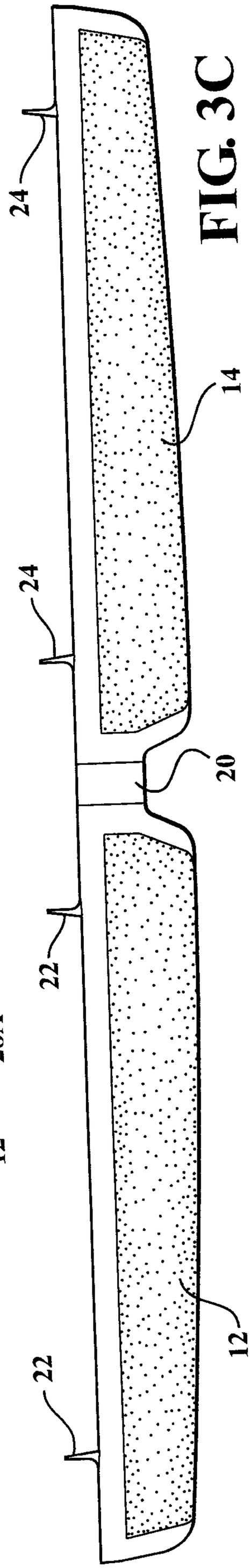

FIG. 3C

FIG. 4A

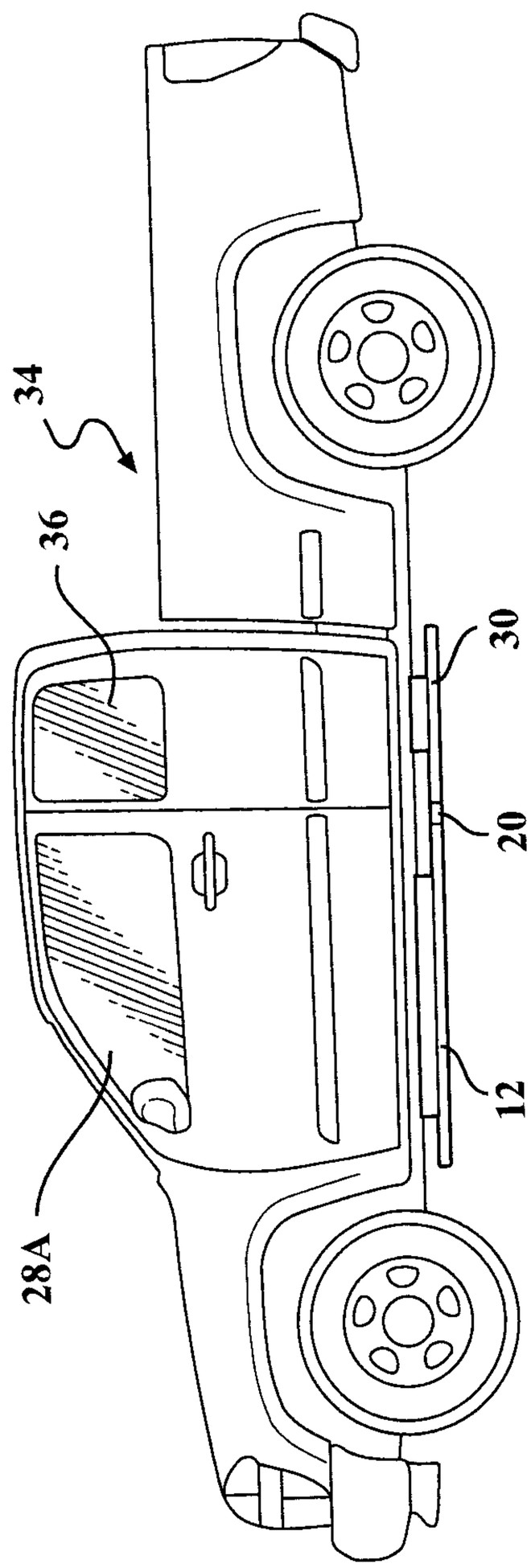

FIG. 4B

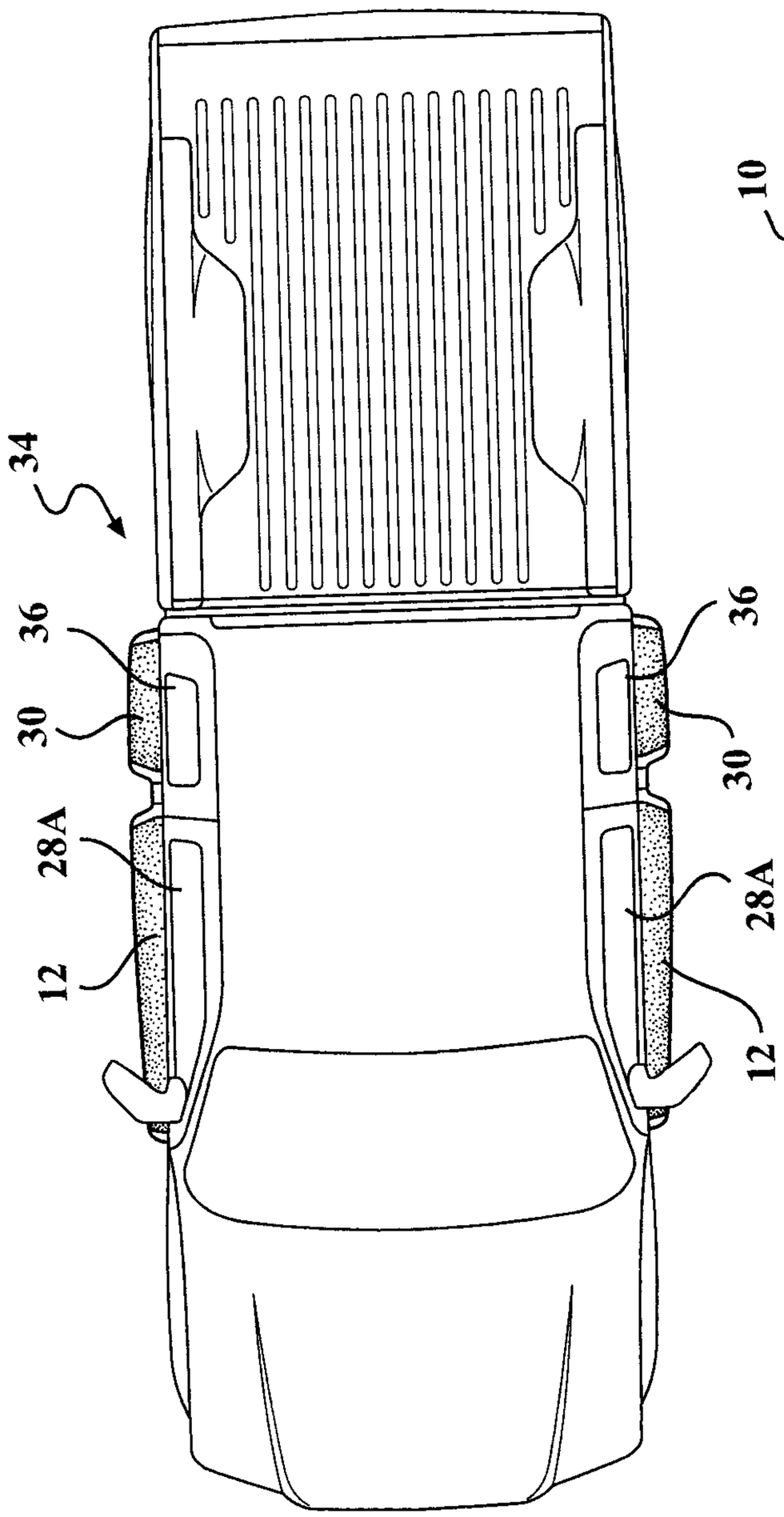

FIG. 4C

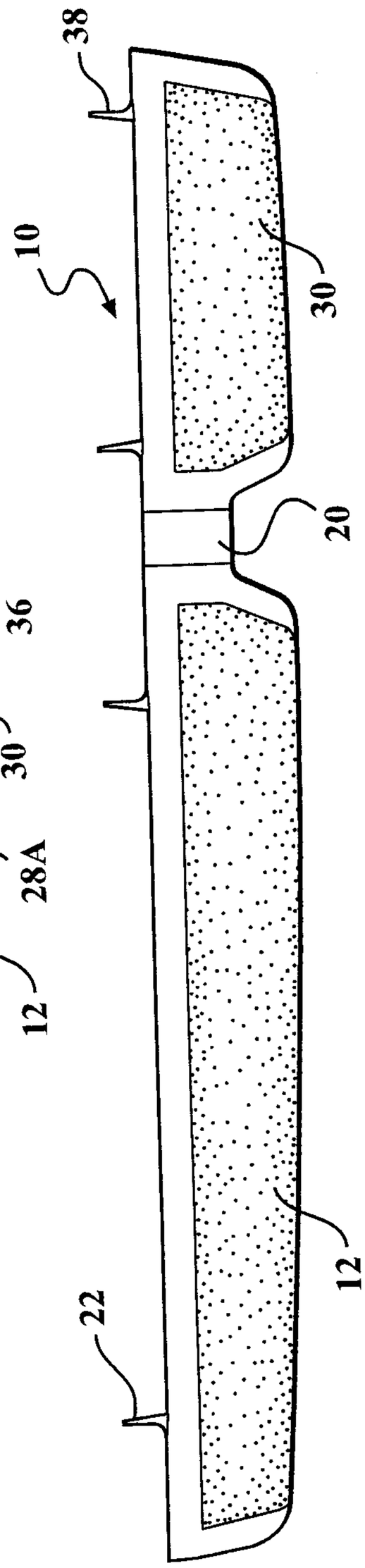

FIG. 5A

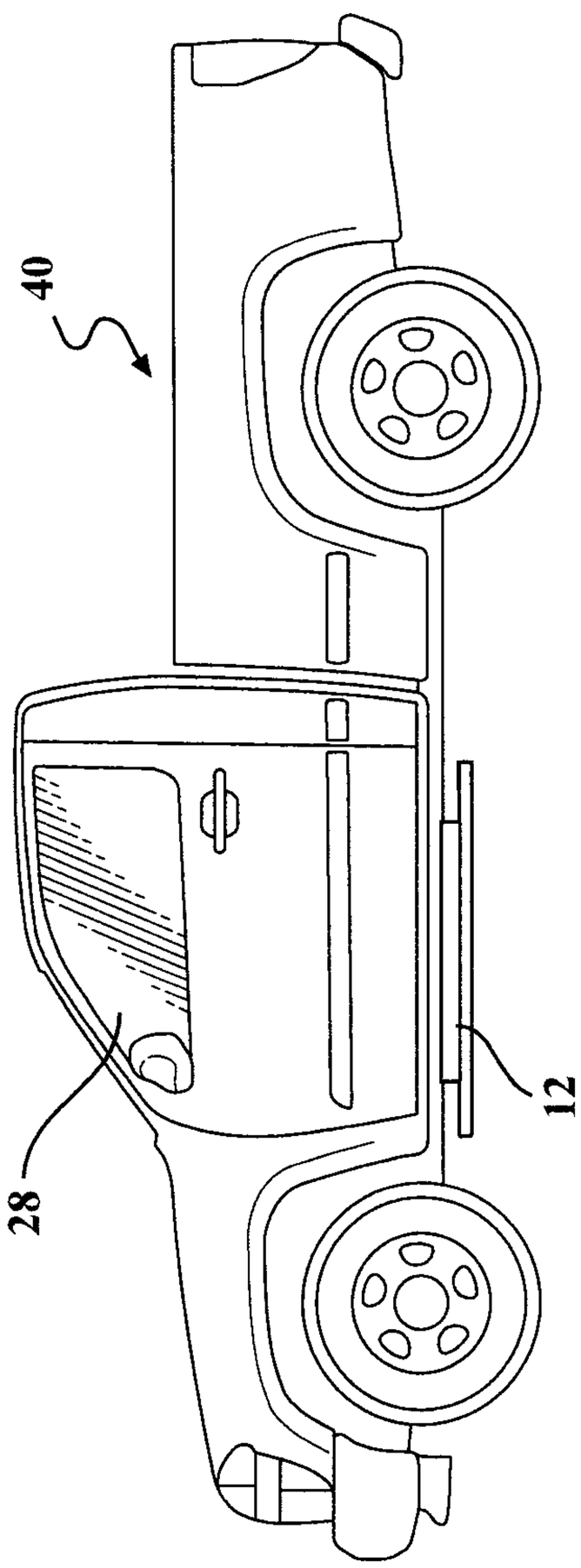

FIG. 5B

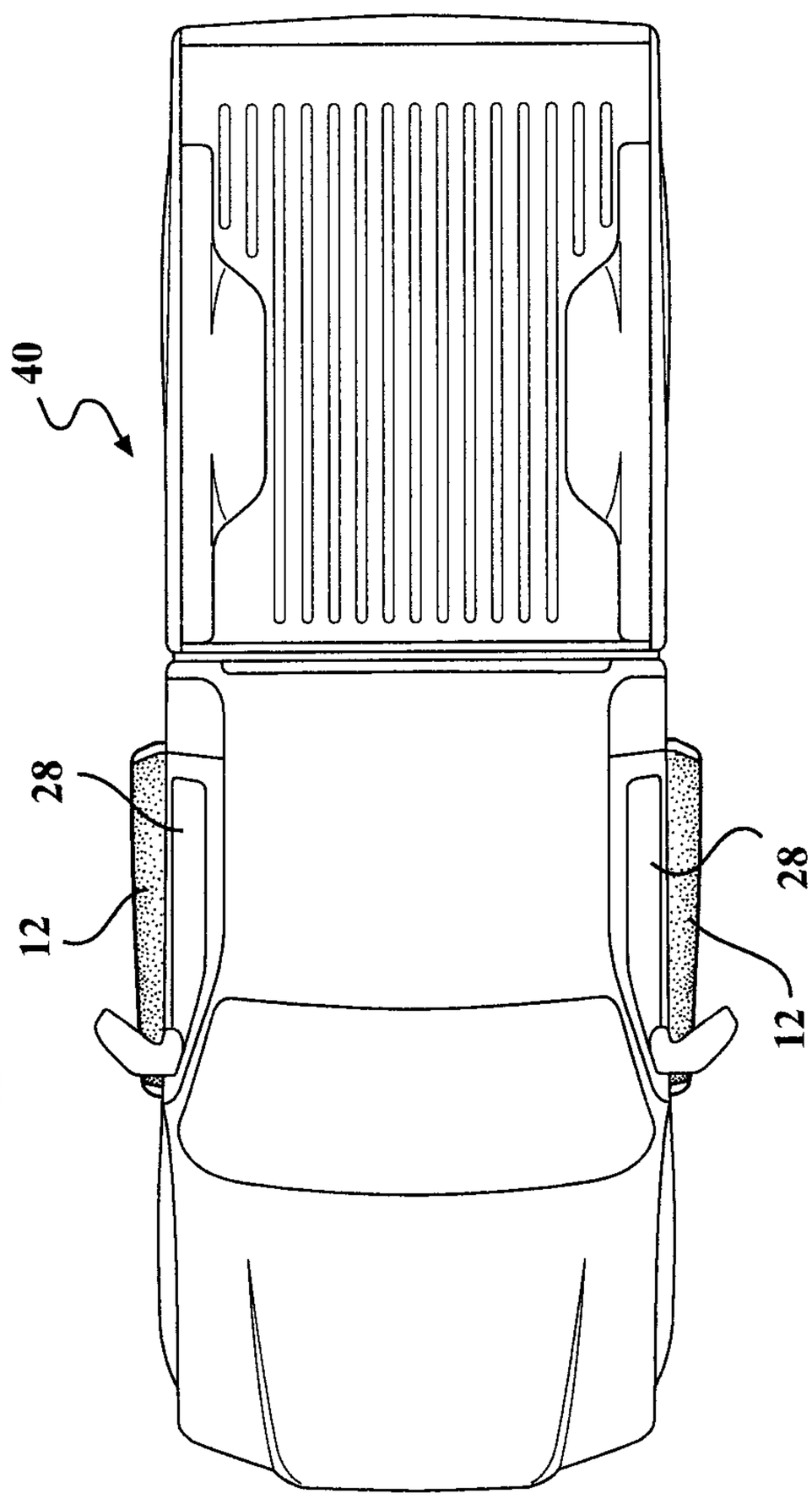

FIG. 5C

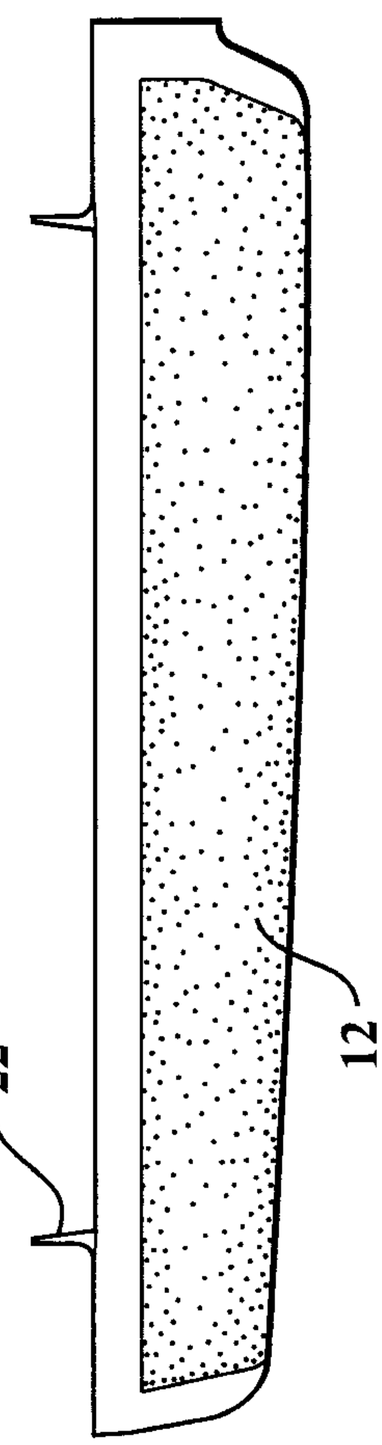

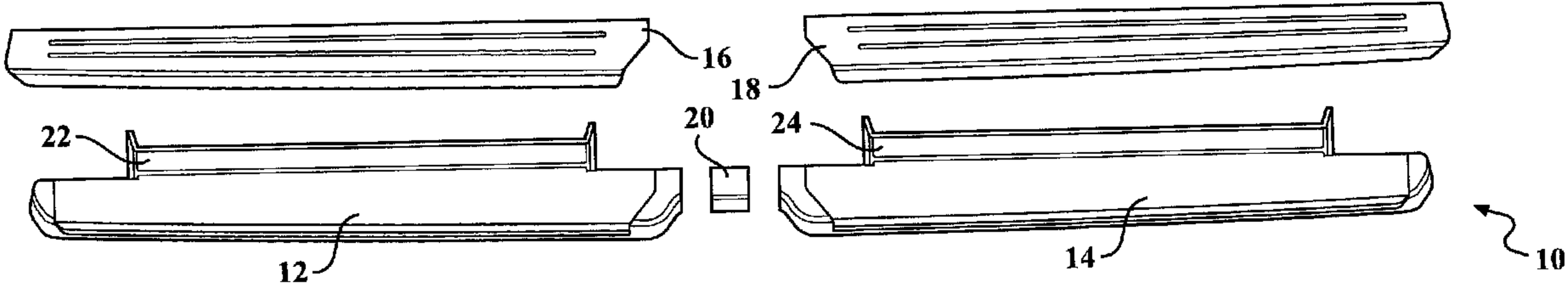
16
18
22
20
24
12
14
10