United States Patent

Davies

[15] **3,675,036**

[45] **July 4, 1972**

[54] AUTO THEFT PREVENTION SYSTEM

[72] Inventor: **Ronald C. Davies,** Las Vegas, Nev.

[73] Assignee: **Modern Research Inc.,** Las Vegas, Nev.

[22] Filed: **April 9, 1970**

[21] Appl. No.: **27,018**

[52] **U.S. Cl.** .....**307/10 AT,** 123/148 E, 123/198 D, 317/134, 340/64

[51] **Int. Cl.** **B60r 25/04**

[58] **Field of Search** .....123/148 E, 198 B, 198 D, 198 DB, 123/198 DC; 317/134, DIG. 10; 307/10 AT, 40; 200/43; 340/64

[56] **References Cited**

UNITED STATES PATENTS

3,418,989	12/1968	Silverman	123/148 E
3,428,033	2/1969	Watts	317/134 X
3,242,388	3/1966	Tellerman	317/134
3,050,644	8/1962	Ironside	317/DIG. 10
3,381,172	4/1968	Weiner	123/148 E
3,447,521	6/1969	Piteo	123/148 E

Primary Examiner—A. D. Pellinen

Attorney—Jacobs & Jacobs

[57] **ABSTRACT**

An improved anti-theft system for a motor vehicle, or the like, which effectively prevents any voltage from being built up across the ignition coil of the vehicle unless a control signal is applied to the system. This is achieved by including a silicon controlled rectifier, for example, in the circuit, the silicon controlled rectifier being fired whenever attempts are made to start the vehicle without the introduction of the control signal to the ignition circuit, the silicon controlled rectifier effectively short-circuiting the primary of the ignition coil as to prevent any build-up of ignition voltage across the secondary. An improved electronic lock circuit supplies the required control signal to the anti-theft system only when a series of switches are closed in a particular pre-selected sequence known only to the owner of the vehicle.

9 Claims, 3 Drawing Figures

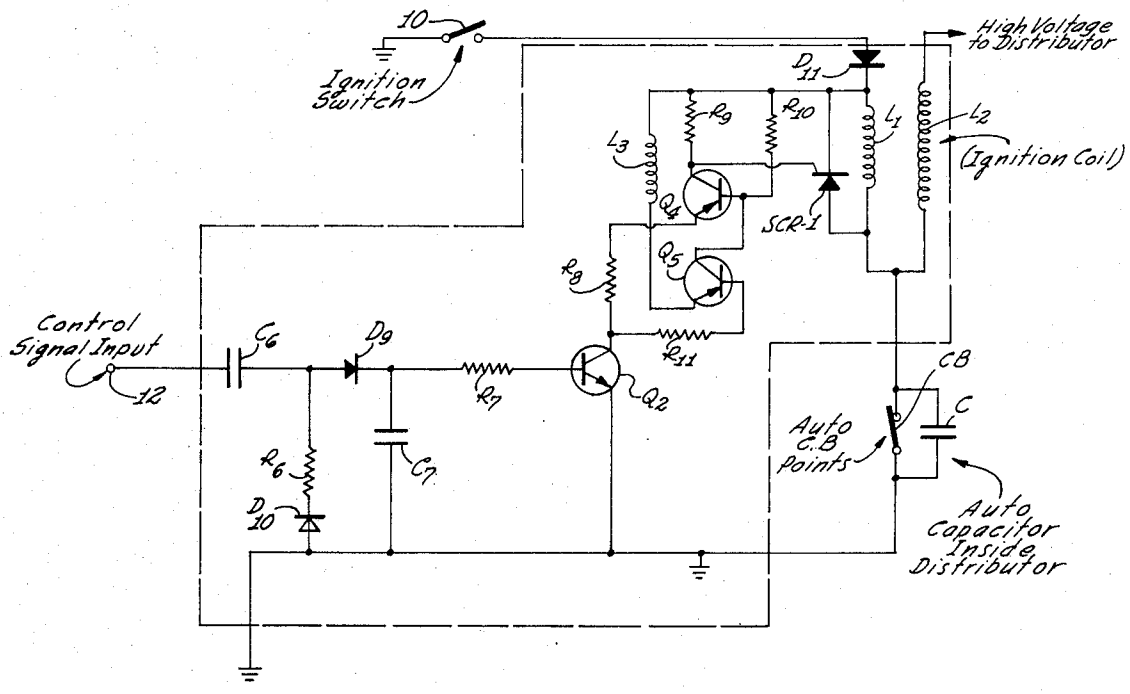

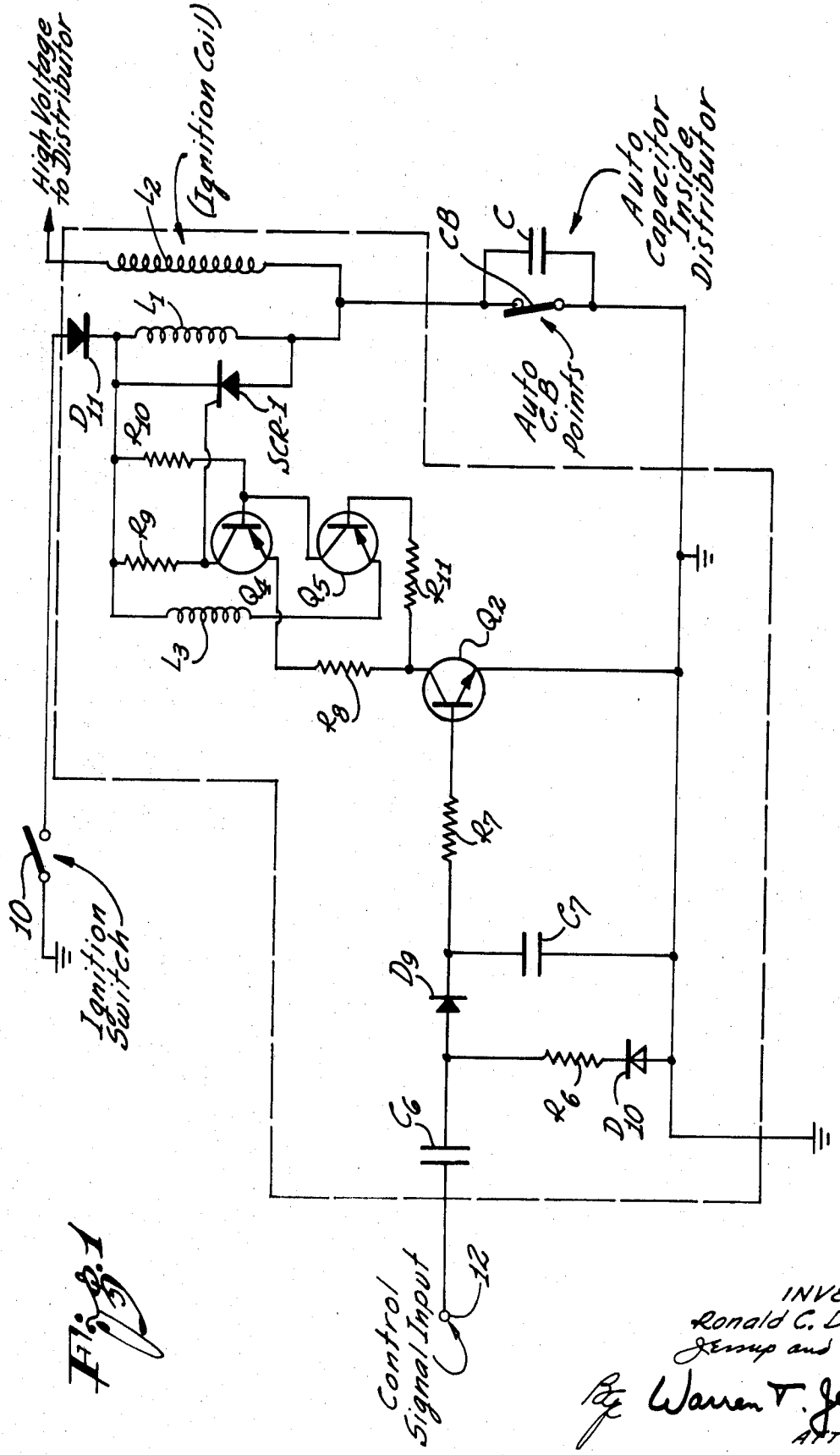

Fig. 1

INVENTOR:
Ronald C. Davies
Jessup and Beecher
By Warren T. Jessup
ATTORNEYS

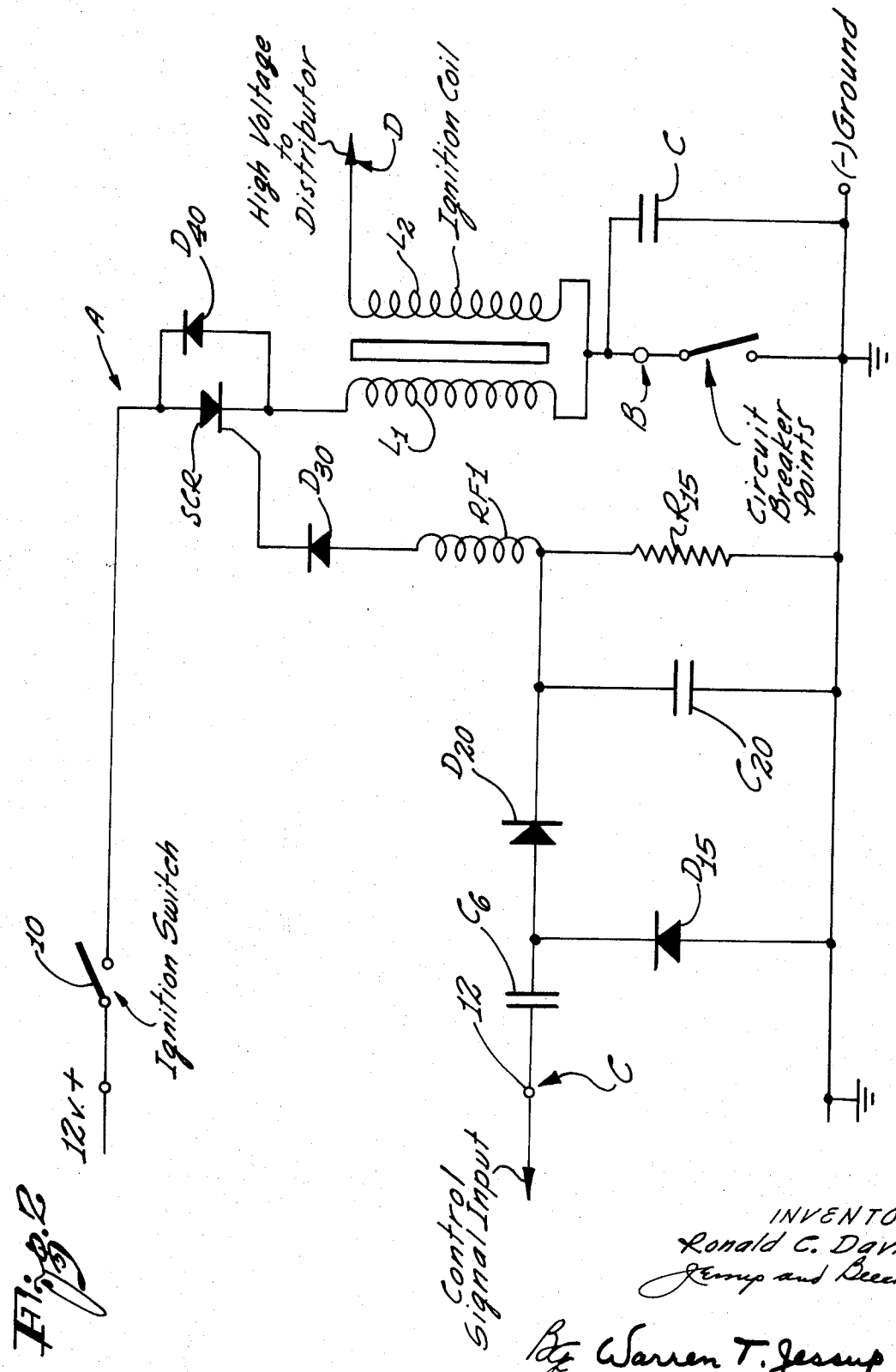

Fig. 2

INVENTOR.
Ronald C. Davies
Jessup and Beecher

By Warren T. Jessup
ATTORNEYS

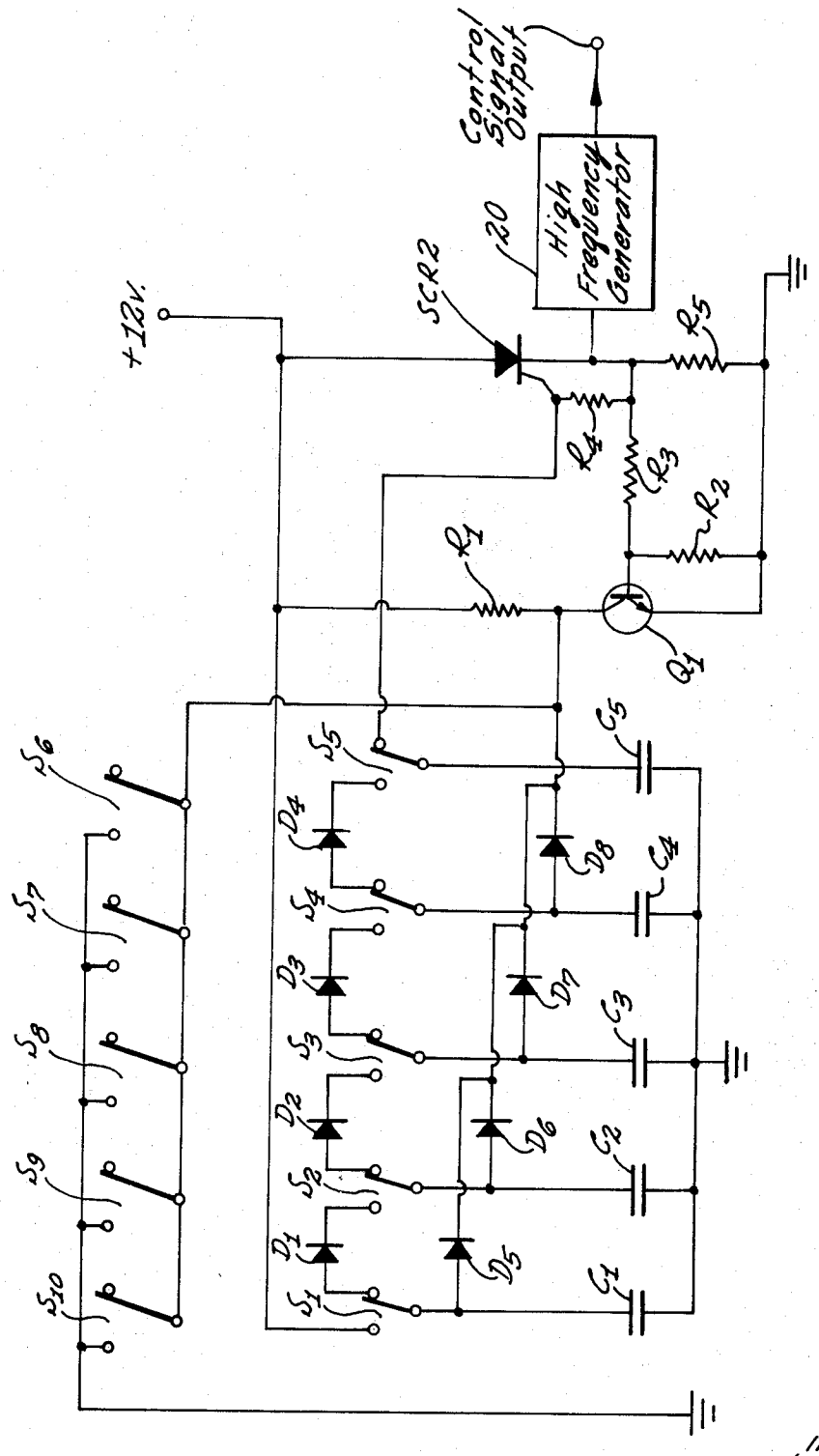

Fig. 3

INVENTOR
Ronald C. Davies
Jessup and Beecher

By Warren T. Jessup
ATTORNEYS

AUTO THEFT PREVENTION SYSTEM

BACKGROUND OF THE INVENTION

Since it is a simple matter for an unauthorized person to connect an electrical jumper across the ignition switch of most present-day motor vehicles, and thereby start the vehicle, many attempts have been made in the past to provide an adequate anti-theft system which would serve to frustrate such attempts. However, such prior art anti-theft systems have been found to be either excessively complex and expensive from a production standpoint; or sufficiently difficult to operate so as to be infeasible insofar as the general public is concerned.

The system of the present invention, however, is virtually foolproof in its operation since it effective prevents anyone from starting the motor vehicle, either by providing a jumper across the ignition switch, or by any other known means. Yet, the system of the invention is easy to operate insofar as the authorized person is concerned. This is because the system requires merely that the authorized person press a series of push-button switches, for example, in a prdetermined order, in order that the required control signal may be applied to the anti-theft system and permit the ignition circuit of the vehicle to be energized. The system of the invention also is advantageous in that it is relatively simple in its construction, and uses readily available standard components.

BRIEF DESCRIPTION OF THE DRAWING

FIG. 1 is a circuit diagram of an anti-theft circuit constructed in accordance with one embodiment of the invention;

FIG. 2 is a circuit diagram of a second embodiment; and

FIG. 3 is a circuit diagram of an appropriate electronic lock control circuit for a high frequency signal generator, so as to activate the generator only when a predetermined sequence of switches is actuated, the generator supplying a necessary control signal for the anti-theft circuits of FIGS. 1 and 2.

DETAILED DESCRIPTION OF THE ILLUSTRATED EMBODIMENT

In the circuit of FIG. 1, the windings L1 and L2 are respectively the primary and secondary portions of a usual ignition coil used in a present-day motor vehicle. The secondary L2 of the ignition coil, as is usual in present-day motor vehicles, is connected to the distributor of the vehicle, whereas the common connection of the portions L1 and L2 is connected to a point of reference potential, or ground through the circuit breaker points of the motor vehicle designated CB, these points being shunted, as is usual, by a capacitor designated C, the capacitor C usually being located inside the distributor of the motor vehicle.

Under normal operation, the ignition switch 10 of the motor vehicle is connected to the positive potential source, designated in the illustrated instance as the positive terminal of a 12 -volt unidirectional source, such as the battery of the vehicle, the negative terminal of the battery being connected to the point of reference potential. The ignition switch 10 is connected through a diode designated D11 to the primary L1 of the ignition coil. Under normal operation of the ignition system thus far described, the ignition switch is closed and the vehicle is started so that a high voltage may be built up across the secondary L2 for use in the operation of the internal combustion engine.

The anti-theft system of the present invention includes a further winding designated L3 which may, for example, consist of several turns of 18 gage wire in a typical installation, and which is wound over the primary L1 of the ignition coil to be inductively coupled thereto. The winding L3 serves to produce, for example, a 3 -volt pulse each time the circuit of the primary L1 is broken, the pulse being in a direction to make its lower end positive with respect to its upper end.

A silicon controlled rectifier designated SCR1 is connected across the primary L1, with its anode connected to the common junction of the primary L1 and secondary L2, and with its cathode connected to the junction of the diode D11 and primary L1. The gate of the silicon controlled rectifier SCR1 is connected to the collector of a PNP transistor Q4, the base of which is connected to the collector of a further PNP transistor Q5. The collector of the transistor Q4 is also connected through a 1 kilo-ohm resistor R9 to the upper end of the coil L3, and the base of the transistor Q4 is also connected through a 4.7 ohm resistor R10 to the upper end of the coil L3, as is the cathode of the silicon controlled rectifier SCR1.

The anti-theft circuit has an input terminal 12 to which the necessary control signal is applied. The input terminal 12 is connected to a 0.1 microfarad capacitor C6 which, in turn, is connected to the junction of a diode D9 and a 1 kilo-ohm resistor R6. The resistor R6 is connected to the point of reference potential through a diode D10. The diode D9 is connected to a capacitor C7 having a capacity of 0.1 microfarads and to a 6.8 kilo-ohm resistor R7. The capacitor C7 is connected to the point of reference potential, and the resistor R7 is connected to the base of an NPN transistor Q2. The emitter of the transistor Q2 is connected to the point of reference potential, and the collector is connected through a 5.6 kilo-ohm resistor R11 to the base of the transistor Q5, and through a 5.6 kilo-ohm resistor R8 to the emitter of the transistor Q4. All the components described above may conveniently be contained within the housing of the ignition coil within the vehicle.

Now, under conditions when no control signal is applied to the input terminal 12, and an attempt is made to start the motor vehicle, which under the conditions would be unauthorized, the primary L1 is energized and builds up a magnetic field. The silicon controlled rectifier SCR1 is reversed biased by the transistor circuit connected thereto and thereby does not affect the current flow through the primary L1. As the internal combustion engine is turned by the starter motor, the contact breaker point CB opens and breaks the circuit to L1. The resultant collapse of magnetic energy within the ignition coil induces a back electromotive force across the primary L1 which, if unimpeded, would normally rise to about 200 volts in a typical example.

The direction of the aforesaid back electromotive force is such as to forward bias the silicon controlled rectifier SCR1, and at the same time a gate signal is applied to the silicon controlled rectifier by the winding L3 through the circuit of the transistors Q5 and Q4, so that the silicon controlled rectifier at this instant is rendered conductive, and damps out the primary L1. This damping effect of the silicon controlled rectifier causes the secondary voltage to be held at around 300 volts, as opposed to the normal 15 kilovolts required in most present-day systems to energize the internal combustion engine.

However, if the required control signal is present at the input terminal 12 during an authorized attempt to start the motor vehicle, this control signal, which is in the form of a high frequency alternating-current signal, is fed by way of the blocking capacitor C6 to a detector network formed by the elements D9, R6 and D10 to build up a charge across the capacitor C7. This charge supplies a forward bias for the transistor Q2, and causes that transistor to become conductive. The conductivity of the transistor Q2 causes a negative voltage to appear at its collector. The negative voltage now available at the collector of the transistor Q2 is used to make the transistor Q5 conductive. The conductivity of the transistor Q5 deprives the transistor Q4 of its forward bias, so that the latter transistor is non-conductive.

As a result of the aforesaid action, the gate pulse to the silicon controlled rectifier SCR1 is effectively inhibited when the circuit breaker points CB are opened, so that the silicon controlled rectifier remains in its open circuit state permitting a voltage build-up across the primary L1 and allowing transformer action to take place between the primary L1 and the secondary L2, so as to provide the required high voltage to the spark plugs of the internal combustion engine.

The modified system of FIG. 2 is generally similar to the system of FIG. 1, except that it has been specifically designed to be mounted directly on a printed circuit board which, in

turn, can be mounted directly on the ignition coil of the motor vehicle. The circuit board, for example, may be circular and may be drilled to fit over the terminal posts of the ignition coil, with the terminal post nuts of the ignition coil holding the board in place and making contact with the circuit on the circuit board. Once fitted, the circuit board is enclosed, for example, in a locked housing, or it may be encapsulated in position.

In the circuit of FIG. 2, the coupling capacitor C6 is connected to the junction of a diode D20 and a grounded diode D15. The diode D20 is connected to a R.F. choke coil RF1, and to a grounded capacitor C20 and grounded resistor R15. The RF choke is connected through a diode D30 to the gate electrode of a silicon controlled rectifier SCR, the anode of which is connected to the ignition switch 10, and the cathode of which is connected to the coil L1. A diode D40 is shunted across the silicon controlled rectifier SCR.

In the absence of the control signal, the primary voltage to the coil L1 is blocked by the silicon controlled rectifier SCR. However, when the control signal is applied to the input terminal 12, the diodes D15 and D20 build up a charge across the capacitor C20 (which may have a capacity of 50 m.f.d.). The RF choke RF1 is in series with the gate circuit of the silicon controlled rectifier SCR, so that the high frequency charging pulse at the cathode of the diode D20 will set a high impedance at the input of the gate circuit and will charge the capacitor C20 more efficiently.

The diode D20 is included in the circuit merely as a precaution against any high voltage transients which may appear in the gate circuit. The diode D40 is also included as a protective measure.

The resulting direct current voltage built up across the capacitor C20 in the presence of the control signal is sufficient to trigger the silicon controlled rectifier SCR when the circuit breaker points of the vehicle close. When the breaker points re-open, the capacitor C20 is again charged and the cycle repeats. It has been found that even at high engine speeds the breaker points are open long enough to permit the capacitor C20 to charge and fire the silicon controlled rectifier SCR.

The silicon controlled rectifier is placed on the high voltage end of the coil in order to protect it from high voltage transients. Also the capacitor C which normally is included in the distributor of the motor vehicle may be mounted on the circuit board of the circuit of FIG. 2, along with the other components. The only accessible points on the system after encapsulation are those marked A, B, C, D.

The aforesaid control signal is generated, for example, by a typical high frequency signal generator shown in FIG. 3, and designated by the block 20. The generator 20 in turn is controlled by an electronic lock circuit which likewise may be connected to the 12 -volt supply of the motor vehicle. The high frequency generator is controlled by a trigger circuit made up of a silicon controlled rectifier SCR2 whose anode is connected to the positive terminal of the 12 -volt source, and its cathode is connected through a 1 kilo-ohm resistor R5 to the point of reference potential. The cathode also is connected to the high frequency generator 20 so as to activate the generator only when the silicon controlled rectifier SCR2 is rendered conductive.

A series of double-pole double-throw switches S1–S5, for example, is provided with the common terminal of each switch being connected to respective capacitors C1–C5, the capacitors being connected to the point of reference potential. Each of the capacitors C1–C4, for example, may have a capacity of 2 microfarads, whereas the capacitor C5 may have a capacity of 0.03 microfarads.

The circuit also includes a series of diodes D1–D4 which are bridged between the respective switches, as shown, with the remaining terminal of the switch S1 being connected to the positive 12 -volt source, and with the remaining terminal of the switch S5 being connected to the gate of the silicon controlled rectifier SCR2. The gate is also connected through a resistor R4 to the cathode and to a 10 kilo-ohm resistor R3. The resistor R3 is connected to the base of an NPN transistor Q1 and to a 4.7 kilo-ohm resistor R2. The latter resistor is connected to the point of reference potential, as is the emitter of the transistor Q1. The collector of the transistor Q1 is connected to the 12 -volt source through a 2.2 kilo-ohm resistor R1, and the collector is also connected to a series of diodes D5, D6, D7 and D8 to the capacitors C1–C4 respectively. A further group of switches S6–S10 are provided, as shown, and when any one of these latter switches is closed, the collector of the transistor Q1 is connected to the point of reference potential.

The switches S1, S2, S3, S4 and S5 are shown in their normal conditions, in which the left-hand contact of each switch is normally open, and the right-hand contact is normally closed. The 12 -volt supply is connected to the normally open contact of the switch S1, so that when the switch is actuated, the capacitor C1 is charged to approximately the full supply voltage. On release of the switch S1 which, like the other switches is preferably in the form of a push button, the charge across the capacitor C1 is supplied by way of the diode D1 to the normally open contact of the switch S2. Then, actuation of the switch S2 causes the charge on the capacitor C1 to be transferred to the capacitor C2. Likewise, the actuation of the switches S3, S4 and S5 in the proper sequence causes the charge to be transferred subsequently to the capacitor C5. The diodes D5–D8 form a discharge path for the capacitors, in the event that any push button switch, such as any one of the switches S6–S10 is depressed.

Only when the switches S1–S5 are sequentially actuated in the proper sequence is the silicon controlled rectifier SCR2 fired so as to activate the high frequency generator 20. The firing of the silicon controlled rectifier occurs, under those conditions, when the switch S5 is released so that it is returned to the condition shown in FIG. 3 permitting the charge on the capacitor C5 to be used to trigger the silicon controlled rectifier SCR2. This causes the high frequency generator 20 to be activated for a sufficient interval to permit the motor vehicle to be started.

However, any other sequence of actuation of the switches S1–S5 apart from the sequence described above will not cause the transfer of the required charge to the capacitor C5. Also, any actuation of any one of the switches S6–S10 causes all the capacitors to be discharged so that the circuit is rendered ineffective. The circuit of the transistor Q1 causes the capacitor circuits to be reset when the unit is switched off, so that the circuit will immediately and automatically be ready for recycling by the correct code. That is, after the silicon controlled rectifier SCR2 fires, the circuit of the transistor Q1 assures that all the capacitors C1–C4 are fully discharged so as to be ready for the next cycle.

It will be appreciated that the push button switches S1–S10 may be arranged on a common panel and in any physical position. Also, they may be given any number code. Then, only when the operator pushes, in sequence, the push buttons corresponding to S1, S2, S3, S4 and S5 in the illustrated circuit, will he be able to trigger the silicon controlled rectifier SCR2 and activate the high frequency generator 20. Any other sequence is ineffective since the wrong sequence of switching of the switches S1–S5 prevents the proper transfer of charge from one capacitor to the next, and any actuation of the switches S6–S10 causes any charge on the capacitors to be immediately dissipated.

It is only when the proper sequence of switches has been observed, will the silicon controlled rectifier SCR2 be triggered, effectively to supply the positive 12 -volt voltage to the high frequency generator 20 and the base bias for the reset transistor Q1. The high frequency generator 20 may be of any present-day design and may, for example, be a simple multivibrator operating, for example, at approximately 100 kilohertz. When the signal from the high frequency generator 20 is applied to the input terminal 12 of the control circuit of FIG. 1, the blocking capacitor C6 offers very little impedance of the selected frequency, and the signal is therefore passed by

the capacitor and is made to operate the ignition system of the vehicle, in the manner described.

In other words, the elements C6 and R6 form a filter circuit, so that a selected high frequency signal must be used before the ignition circuit is activated. That is, further protection may be achieved by making the input of the anti-theft control system of FIG. 1 frequency selective to a particular control signal frequency, and, in each instance, matching the frequency of the high frequency generator 20 of the control circuit of FIG. 3 to that particular frequency. In this way, each individual unit may be controlled to a different selected frequency which is effective for that unit only.

The invention provides, therefore, a simple and improved anti-theft control system for use in motor vehicles, and it also provides a simple and improved control for such a system. The system of the invention is advantageous in that it is merely necessary for the authorized operator to memorize a particular switch sequence, and with no significant effort, to start his motor vehicle merely by pressing the switches in the correct sequence. On the other hand, no matter what efforts a would-be thief might use, he would be frustrated in his efforts to energize the ignition circuit of the motor vehicle by any ancillary equipment.

What is claimed is:

1. An anti-theft system in combination with the ignition circuit of a motor vehicle, or the like, said ignition circuit including an ignition coil having a primary winding and a secondary winding, said anti-theft system including switching means connected across said primary winding, and circuit means including a third winding inductively coupled to said primary winding for actuating said first switching means to cause said first switching means to damp said primary winding in response to any back electromotive force developed across said primary winding, so as to maintain the voltage across said secondary winding at a relatively low value.

2. The anti-theft system defined in claim 1, and which includes an input circuit connected to said circuit means and responsive to an applied control signal so as to maintain said switching means in an open condition.

3. The anti-theft circuit defined in claim 2, in which said input circuit includes a filter network responsive only to a control signal of a particular frequency.

4. The anti-theft system defined in claim 1, in which said switching means includes a silicon controlled rectifier to which a gate signal is applied by said third winding.

5. The system defined in claim 1, in which said switching means includes a silicon controlled rectifier, and said circuit means includes transistor circuitry connected to said silicon controlled rectifier to control said silicon controlled rectifier.

6. The anti-theft system defined in claim 5, in which said transistor circuitry responds to an applied control signal to render said actuating means inactive so as to maintain said silicon controlled rectifier in said switching meanS in an open circuited condition.

7. The anti-theft system defined in claim 6, and which includes a signal generator connected to said transistor circuitry for applying said control signal thereto, and an electronic lock circuit connected to said generator for controlling the operation thereof to cause said generator to produce said control signal only upon a predetermined operating condition of said lock circuit.

8. The anti-theft system defined in claim 7, in which said electronic lock circuit includes a series of capacitors, a corresponding series of single-pole double-throw switches connected to respective ones of said capacitors to transfer a charge from one of said capacitors to another when the switches are actuated in a predetermined sequence; and a trigger circuit connected to one of said switches to said signal generator for activating said signal generator upon the actuation of said switches in said predetermined sequence.

9. The anti-theft system defined in claim 8, in which said electronic lock circuit includes additional switches connected to the switches of the aforesaid series and to circuitry serving to discharge the aforesaid capacitors when any one of said additional switches is actuated thereby to prevent the activation of said signal generator by said trigger circuit.

* * * * *