April 6, 1943. R. L. DOWNEY 2,315,945

CALIBRATING DEVICE

Filed Dec. 26, 1941

Fig. 1.

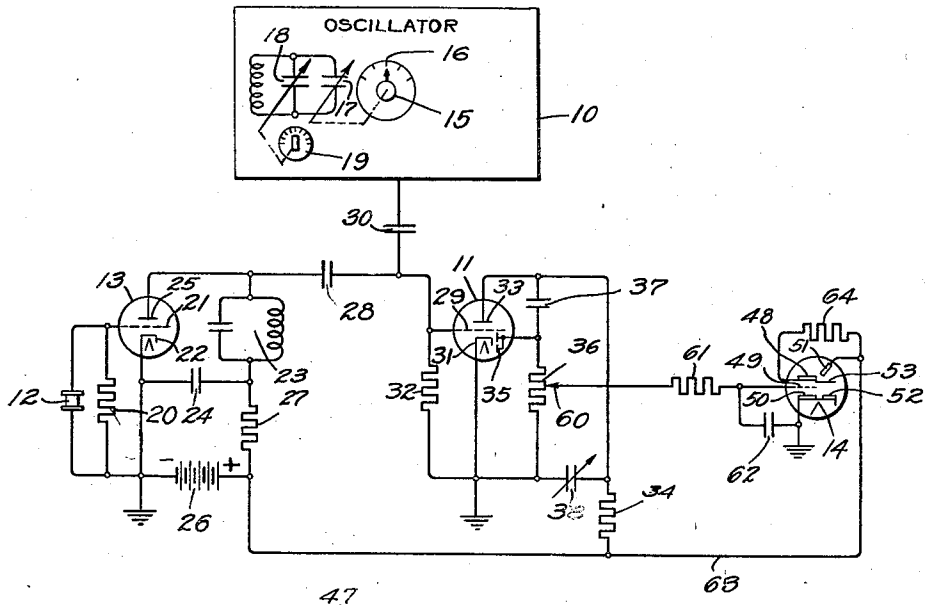


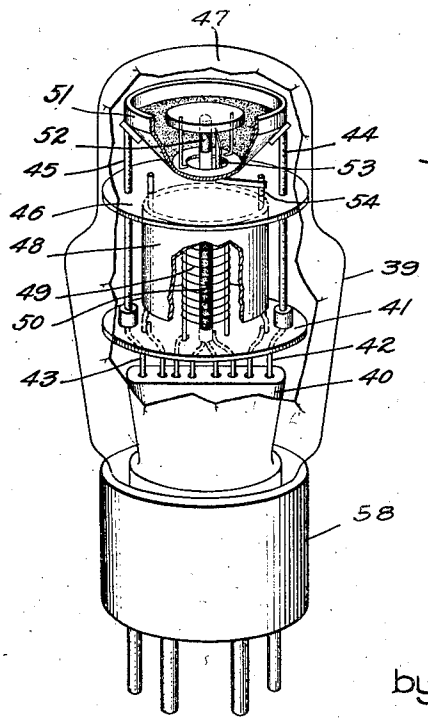


Fig. 2.

Inventor:
Reginald L. Downey,
by Harry E. Dunham
His Attorney.

Patented Apr. 6, 1943 2,315,945

# UNITED STATES PATENT OFFICE

2,315,945

## CALIBRATING DEVICE

Reginald L. Downey, Scotia, N. Y., assignor to General Electric Company, a corporation of New York

Application December 26, 1941, Serial No. 424,393

5 Claims. (Cl. 250—39)

My invention relates to calibrating devices, and more particularly to such devices for indicating coincidence between the unknown frequency of a wave and a standard frequency.

One common form of such a calibrating device includes a standard frequency oscillator, means for heterodyning the output of the standard frequency oscillator with the wave of unknown frequency, and means for producing an indication of the beat frequencies produced by the heterodyne operation. Confusion and incorrect indications often result with such apparatus because of the complexity of the heterodyne products, particularly those of the higher frequencies. It is, accordingly, an object of my invention to reduce the possibility of such confusion and incorrect operation of such a system.

It is a further object of my invention to provide such a calibrating device of simplified and improved form, which is easily operated in minimum time with minimum chance of error.

The features of my invention which I believe to be novel are set forth with particularity in the appended claims. My invention itself, both as to its organization and manner of operation, together with further objects and advantages thereof may best be understood by reference to the following description taken in connection with the accompanying drawing in which Fig. 1 schematically illustrates a circuit arrangement embodying my invention, and Fig. 2 is a perspective view of a visual indicating device which may be used in the embodiment of Fig. 1.

In Fig. 1 I have represented a variable frequency oscillator 10, whose dial is to be calibrated, in terms of its output frequency. This oscillation may be considered to transmit oscillations to an electron discharge device 11, in which heterodyne action takes place with oscillations supplied by a standard frequency oscillator including a piezoelectric vibrator device 12 and an electron discharge device 13. Oscillations resulting from the heterodyne action are impressed on a cathode ray visual indicating device 14 arranged to indicate the frequency relation between waves from the oscillator 10 and from the device 12. The oscillator 10 has a control knob 15 by which the frequency of its output may be adjusted between certain limits. When the control knob 15 is adjusted to a certain setting, which may be represented by a particular marking 16 on the attached dial, it is intended that the output of the oscillator 10 shall be equal in frequency with the frequency of operation of the device 12.

Means are provided whereby the frequency of the output of the oscillator 10 may be adjusted, without moving the control knob 15, so as to make this frequency coincide with the standard frequency of the output of the device 12. It is usual in variable frequency oscillators, such as the oscillator 10, to adjust frequency by varying the capacity of a tuning condenser, such as the condenser 17 in the oscillatory circuit of the oscillator 10. The means for adjusting the frequency of the output of oscillator 10 without adjusting the control knob 15 may conveniently include a second, or trimming, condenser 18, connected in shunt to the main tuning condenser 17, and adjustable by a second control knob 19.

In the standard frequency oscillator, with the output of which the output of the oscillator 10 is heterodyned, the piezoelectric vibrator device 12 is connected in shunt to a resistance 20 between the control electrode 21 and cathode 22 of the discharge device 13. A tuned circuit 23 is connected in series with a bypassing condenser 24 between the anode 25 and cathode 22 of the discharge device 13 to form a tuned output circuit therefor. Operating current for the device 13 is supplied from a source of potential 26. The negative terminal of source 26 is connected to the cathode 22 and to ground, and the positive terminal is connected through a resistance 27 and through the tuned circuit 23 to the anode 25. The oscillator operates in normal fashion, the piezoelectric vibrator device 12 being maintained in oscillation by feedback from the tuned output circuit 23 through interelectrode capacity between the anode 25 and control electrode 21. The resistance 20 provides a path for the flow of grid current between the control electrode 21 and cathode 22 and maintains a suitable operating bias on the control electrode 21.

The output of the oscillator including the device 12 and discharge device 13 is impressed through a coupling condenser 28 upon the control electrode 29 of the discharge device 11, and the output of the oscillator 10 is impressed on the same control electrode 29 through a coupling condenser 30. The cathode 31 of the discharge device 11 is connected to ground, and to control electrode 29 through a resistance 32, which resistance provides a path for the flow of grid current. A variable condenser 38 is connected between the anode 33 and cathode 31 of the discharge device 11, and is adjusted to such a value of capacity that the anode 33 of the device 11 varies in voltage primarily by reason of heterodyne action between the outputs of the

two oscillators. That is, the condenser 38 provides a more or less complete short circuit between the anode 33 and cathode 31 for waves of the frequency of the waves from the oscillator 10 and from the standard frequency oscillator. The condenser 38 has substantial reactance at considerably lower frequencies, such as the frequency of waves produced by heterodyne action between the outputs of the two oscillators.

Operating current for the discharge device 11 is supplied from the positive terminal of the source 26 of potential through a resistance 34 to the anode 33, and this current flows back through the cathode 31 and ground to the negative terminal of source 26.

The discharge device 11 is of the duplex type, in which two sections are provided, one forming a triode comprising the cathode 31, control electrode 29 and anode 33, and the other section comprising the cathode 31 and a pair of anodes 35 forming a diode. This diode 35—31 is used to rectify the heterodyne waves appearing on the anode 33 to produce a continuous potential varying at a frequency equal to the difference between the frequencies of the output of the oscillator 10 and the piezoelectric vibrator device 12. A resistance 36 is connected between the anode 35 and the cathode 31, and a coupling condenser 37, connected between the anode 35 and the anode 33, transmits heterodyne waves from the anode 33 to the anode 35 to be there rectified. The coupling condenser 37 and the resistance 36 constitute a high pass filter. The rectified voltages from the diode 35—31 appear across the resistance 36 from which they are transmitted to the cathode ray visual indication device 14.

This cathode ray device 14 is illustrated in detail in Fig. 2, in which a pin terminal base 58 supports a glass envelope 39 within which the operating portions of the device are enclosed. A portion of the glass envelope 39 is broken away in order to show more clearly the internal construction of the device. In the lower portion of the envelope 39, formed integrally therewith, is a press 40 through which connections pass from the pin terminals of the base 58 to the electrode elements of the device within the envelope 39. These connections also provide support for the electrodes. Just above the press 40 a mica disc 41 is supported on two connections 42 and 43 at the opposite ends of the press 40, and in turn the mica disc 40 supports pillars 44 and 45 upon which a second mica disc 46 is mounted part way between the mica disc 41 and the end of the envelope 47 opposite to the base 58.

Between the mica discs 41 and 46 a triode electron discharge section is formed including a cylindrical metal anode 48, a helical control electrode 49 and an indirectly heated coated cathode 50. A suitable connection is provided from each of these three electrodes and from the terminals of the heater for the cathode 50 to the terminals of the base 58.

The upper end of the cathode 50 extends through and above the mica disc 46, to a point within a dish-shaped electrode 51 supported above the disc 46 on columns 44 and 45. That portion of the cathode 50 near the mica disc 46 is uncoated so as not to emit electrons. The upper end 52 of the cathode 50 within the electrode 51 is coated for the emission of electrons. The interior surface of the dish-shaped electrode 51 is coated with material adapted to produce fluorescence upon bombardment by electrons from the coated end 52 of the cathode 50. Such fluorescence results when a suitable positive potential is applied to the connection 42 or 43 with respect to the connection to the cathode 50, and it appears on those portions of the internal surface of the electrode 51 which are bombarded by electrons from the coated portion 52 of the cathode 50. The resulting fluorescence may be viewed through the transparent end 47 of the envelope 39.

A control electrode 53, in the shape of small rod or narrow flat strip is placed parallel to the upper end 52 of the cathode 50 between the cathode and the dish-shaped electrode 51 for the purpose of electrostatically shielding a variable portion of the internal surface of the electrode 51 from bombardment by electrons from the coated portion 52 of the cathode 50. The potential of the electrode 53 with respect to the coated portion 52 of the cathode 50 is determined by a connection to the anode 48 from the electrode 53 through a supporting post 54 mounted between the mica discs 41 and 46 and attached to the anode 48.

Referring again to the device 14 as illustrated in Fig. 1, the connections therefor may be explained to show how visual indications are produced by the device 14 in response to heterodyne action between the output of the oscillator 10 and the standard frequency vibrator device 12. Corresponding parts of the device 14 in Fig. 1 have been given the same numerals as like parts in Fig. 2. A variable tap 60 on resistance 36 is connected through a resistance 61 to the control electrode 49 of the device 14, which electrode is connected through a bypassing condenser 62 to the cathode 50. The resistance 61 cooperating with the condenser 62 forms a low pass filter, whose adjustment and method of operation is described hereinafter. Operating current for the device 14 is supplied from the positive terminal of the source 26 of potential through conductor 63 to the anode 51, and from thence through resistance 64 to the anode 48.

In operation, the voltage of the control electrode 49 with respect to the cathode 50 determines the amount of area on the internal surface of the dish-shaped anode 41 which is not bombarded by electrons, and which correspondingly does not fluoresce to produce light. This area is generally in the shape of a sector of a circle formed by two radii extending from the end portion 52 of the cathode 50. If the control electrode 49 is at a high negative potential with respect to the cathode 50, so that discharge current does not flow from the cathode 50 to the anode 48; the anode 48, and consequently the control electrode 53, becomes highly positive with respect to the end portion 52 of the cathode 50. The result is that electrons from the end portion 52 of the cathode 50 not only bombard all portions of the internal surface of the anode 51, but electrons from certain portions of the cathode 50 to the left of the control electrode 53 pass in a curved line of flight to bombard the internal surface of the anode 51 at a considerable distance to the right of the control electrode 53, while electrons emitted from certain portions of the cathode 50 to the right of the control electrode 53 follow an oppositely curved path to bombard portions of the internal surface of the anode 51 to the left of the control electrode 53. Such curved paths are produced because of the fact that the control electrode 53 strongly attracts electrons emitted from the end portion 52 of the cathode 50. There is consequently produced a fluorescent pattern on the in-

ternal surface of the anode 51 in which the entire surface fluoresces to produce light but in which a portion of the internal surface of the anode 51 adjacent the control electrode 53 fluoresces more strongly than the remaining portions, thereby exhibiting an overlapping effect. The edges of this region of overlapping are sharply defined because the control electrode 53 is maintained positive with respect to the end portion 52 of the cathode 50.

When the control electrode 49 is less negative with respect to the cathode 50, so that some discharge current flows from the cathode 50 to the anode 48, a potential drop is produced through the resistance 64 by this discharge current with the consequence that the anode 48 is reduced in potential, and the control electrode 53 is made less positive with respect to the end portion 52 of the cathode 50. With this reduction in positive potential of the control electrode 53, the angle of overlap of fluorescence on the internal surface of the anode 51 decreases, the edges of this overlap still remaining sharply defined because the control electrode 53 is still at a positive potential with respect to the end portion 52.

If the control electrode 49 assumes a minimum negative potential, or even assumes some positive potential, the potential of the anode 48 is reduced to a small positive potential and the potential of the control electrode 53 is correspondingly reduced, however, always remaining positive with respect to the end portion 52 of the cathode 50. During this reduction in potential of the anode 48 a point is reached at which the overlap of fluorescence on the internal surface of the anode 51 no longer exists. Upon further decrease in potential of the anode 48 an increasingly large part of the internal surface of the anode 51 becomes dark. At all times the edges of this area are sharply defined by reason of the fact that the control electrode 53 is always positive with respect to the end portion 52 of the cathode 50.

In operation, the apparatus of Fig. 1, as explained previously, produces heterodyne voltage across the resistance 36 by interaction between the output waves of the oscillator 10 and the standard frequency vibrator device 12. If the frequency of the waves from the oscillator 10 differs from the frequency of operation of the vibrator device 12 by only a small frequency, the heterodyne wave across the resistance 36 is of this small frequency, and this heterodyne wave applied between control electrode 49 and the cathode 50 causes the control electrode 53 to vary in voltage at the same frequency, thereby to change the "shadow angle" produced by the fluorescence on the internal surface of the anode 51 at such frequency.

It is well known that fluorescent materials produce light for an appreciable time after being excited into fluorescence in some manner, as by bombardment by electrons. When the frequency of the heterodyne wave applied to the control electrode 49 is low, this persistence of fluorescence on the internal surface of the dish-shaped anode 51 is of little consequence, and the edges of the "shadow angle" remain sharply defined. As the difference in frequency between the frequency of the waves from the oscillator 10 and from the vibrator device 12 increases, the frequency of the heterodyne wave applied to the control electrode 49 increases, and a flicker is noticeable. Eventually, upon further increase in frequency of the heterodyne wave, the flicker disappears due to the effect of persistence of fluorescence, and a somewhat blurred light portion is visible. The edges of this light portion, however, remain distinct.

By the use of the low pass filter including the resistance 61 and the condenser 62 heterodyne waves across the resistance 36 whose frequency is higher than any desired frequency are prevented from appearing in any substantial amount on the control electrode 49. By the diversion of such heterodyne waves, the response of the visual indication device 41 is made to suit the individual tastes of each user.

In a particular case the fluorescent material on the internal surface of the anode 51 of the visual indication device 14 may, for example, be of such character that a wave applied to the control electrode 49 whose frequency is higher than about 30 or 40 cycles causes little flicker, the motion of the "shadow angle" being more rapid at such input frequency than the period of fluorescent decay of the fluorescent material. It may then be desired to construct the low pass filter so that the reactance of condenser 62 is substantially equal to the resistance 61 at this frequency above which substantial flicker is not noticeable. If this frequency be, for example, 30 cycles, the resistance 61 might suitably be ½ megohm and the condenser 62 might be about 10,000 micromicrofarads.

The arrangement as just described above is useful for calibrating the frequency of the oscillator 10 in terms of the frequency of operation of the vibrator device 12, where the frequency change in the output of the oscillator 10 caused by the control knob 19 need not be very large with respect to the highest frequency indicated by the visual indicator 14, which in the case described is a frequency somewhat higher than 30 cycles. The arrangement is suitable, for example, if the frequency change caused by adjustment of the control knob 19 does not, for example, exceed about 1 kilocycle. This small frequency change produced by the control knob 19 is sufficient if the frequency of output of the oscillator 10 when the control knob 15 is set at the mark 16 is not more than a few megacycles.

Cases may arise, however, where the frequency of the output of oscillator 10 is of the order of 10 to 50 megacycles, or even higher. In such cases the frequency variation of the output of oscillator 10 caused by adjustment of the control knob 19 when the control knob 15 is set at the mark 16 which must be much larger than 1 kilocycle.

It is in general feasible to make the relationship between the variable condensers 17 and 18 such that adjustment of the control knob 19 is capable of producing about a five per cent change in frequency of the output of oscillator 10 when the control knob 15 is set at the mark 16. If the nominal frequency represented by the mark 16 be, for example, 50 megacycles, it is then desirable that the change in frequency produced by adjustment of the control knob 19 be an amount in the order of 2 or 3 megacycles. With the low pass filter including the resistor 61 and condenser 62 adjusted as described previously, an angular adjustment of the control knob 19 amounting to about one minute of angle is sufficient to produce a frequency change in the output of the oscillator 10 sufficient to cause the frequency of the heterodyne wave across the resistance 36 to vary all the way from a frequency higher than the highest frequency to which the device 14 is responsive to zero frequency and back again to a frequency higher than the high frequency to which the device 14 is responsive. It can therefore be seen that under such conditions of adjustment of the low pass

filter including resistance 61 and condenser 62, adjustment of the control knob 19 in accordance with indications of the visual indicator device 14 would be extremely difficult. It is desirable in such cases to make the cutoff frequency of the low pass filter higher than in cases where the nominal frequency represented by the mark 16 is of a lower value.

In the example given, the output frequency of the oscillator 10 when the control knob 15 is set at the mark 16 may, for example, be 50 megacycles, and adjustment of the control knob 19 is then effective to produce a change of about 2 megacycles in the output frequency. It may be desired to provide that the visual indicating device 14 shall produce a progressively varying indication as the frequency of the output of oscillator 10 is varied over a range of frequencies about 100 kilocycles in width. The frequency band, over which it is desirable that the visual indicating device 14 shall respond, depends on the degree of accuracy to which it is desired that the oscillator 10 may be adjusted.

If the oscillator 10 is capable of very accurate adjustment by adjustment of the control knob 15, highly accurate calibration is necessary, and the cutoff frequency of the low pass filter should be made smaller, with corresponding greater difficulty in the calibration. If then it be, for example, desired that the device 14 shall produce indications over a band 100 kilocycles in width as produced by adjustment of the control knob 19, the reactance of the condenser 62 may be made equal to the resistance 61 at about 25 kilocycles. The reason for this choice may be seen later, when the operation of the device under such conditions is explained. Suitable values for the resistance 61 and condenser 62 under such conditions may, for example, be respectively 6,000 ohms and 10,000 micromicrofarads. In certain cases the visual indicating device 14 may be separated from the remainder of the apparatus by a short distance, such that the control electrode 49 is connected to the resistance 61 by a shielded cable, or the like. Such cable has appreciable capacity to ground and consequently to the cathode 50, which capacity may constitute the condenser 62. Such cable capacity may, for example, be of the order of 20 to 50 micromicrofarads, and a suitable value for resistance 61 may be chosen to cooperate with this capacity in many cases.

In the operation of the device so adjusted for calibrating the oscillator 10 with a high frequency output, with the control knob 15 set at the mark 16 the control knob 19 is adjusted and, assuming that the control knob 19 is capable of adjusting the output frequency of oscillator 10 through the frequency of operation of the vibrator device 12, the "shadow angle" of the visual indicating device 14 remains open until the output frequency of oscillator 10 approaches to within a certain frequency difference from the frequency of operation of the device 12, which in the example described above would be 50 kilocycles. With such frequency difference between the output of oscillator 10 and discharge device 13, the heterodyne wave across the resistance 36 has a frequency equal to such frequency difference, and the low pass filter including resistance 61 and condenser 62 strongly attenuates the heterodyne wave so that a small portion appears on the control electrode 49. Since this wave is of high frequency, the fluorescent pattern on the internal surface of the anode 51 is increased in area, the "shadow angle" decreasing in size in accordance with the high frequency voltage. Since, as explained before, this high frequency heterodyne wave closes the shadow angle and allows it to open again at such a high rate of speed that the fluorescent effect persists from cycle to cycle, it appears that the "shadow angle" of the visual indicating device 14 merely closes slightly.

Upon further adjustment of the control knob 19 to decrease the frequency difference between the output of oscillator 10 and discharge device 13, the frequency of the heterodyne wave across resistance 36 decreases so that more of the waves are applied to the control electrode 49 through the low pass filter, and correspondingly the "shadow angle" of the device 14 decreases further, until a frequency difference is reached at which the persistence effect of the fluorescent material on the anode 51 allows the flicker caused by this low frequency difference to be visible. At such low frequencies the low pass filter including the resistance 61 and condenser 62 produces practically no attenuation, so that the "shadow angle" of the device 14, although flickering, appears substantially in its most closed position, which may be overlapped as explained previously. The frequency difference at which this effect is observed may be sufficiently small as to be within the limits of accuracy to which the frequency of oscillator 10 may be adjusted by adjustment of member 19.

If it is possible to adjust the control knob 19 with greater accuracy, and provided such accuracy be desired, further adjustment of the frequency of the output of oscillator 10 in the same direction decreases the frequency of the heterodyne wave across the resistance 36, and slows down the flicker of the "shadow angle" of the device 14 to a lower and lower rate ultimately approaching zero as indicated by opening of the shadow effects. Any desired accuracy of adjustment of the oscillator 10 may therefore be attained by the use of the low pass filter including the resistance 61 and condenser 62 in conjunction with the visual indicating fluorescent device 14. A contributing factor in making possible this high accuracy, particularly at low frequencies where the movement of the "shadow angle" of the device 14 is observable, is the particular construction of the visual indicating device shown in Fig. 2, where the use of the control electrode 53 results in a sharply defined edge of the electron beam bombarding the luminescent material on the inside surface of the anode 51.

I have so far described the operation of the apparatus of Fig. 1 assuming that the heterodyne waves produced on the anode 33 of the device 11 are substantially unattenuated in being transferred to the anode 35. The apparatus may be so adjusted by utilizing a condenser 37 of sufficient size.

In some cases it may be preferred to prevent the visual indicating device 14 from flickering at very low frequencies, which may disturb the operator engaged in other duties. It is generally unnecessary to adjust the knob 19 with such accuracy that the flicker of the device 14 reaches a zero rate, and it is usually necessary only to reduce the rate of this flicker to a very small percentage of the frequency of the oscillator 10. The size of the condenser 37 may be reduced to a value such that frequencies below this limit beyond which adjustment of the knob 19 is unnecessary are not transmitted to the anode 35. Under such conditions of adjustment, the device 14 produces no flicker within a small frequency

band over which any adjustment of the knob 19 is satisfactory.

Although I have described the apparatus including the low pass filter 61, 62 and the visual indicating device 14 as being used for indicating the frequency difference between the outputs of two oscillators, it is within the scope of my invention to utilize the combination of such a low pass filter and visual indicating device for determining when the frequency of any wave approaches zero within any desired proximity. The combination of the high pass filter including condenser 37 and resistance 36, the low pass filter including resistance 61 and condenser 62, and the visual indicating device in the manner described is especially useful since the opening of the "shadow angle" of the visual indicating device gradually increases in a natural and expected manner as the frequency of the applied wave decreases, and the closure of the "shadow angle" is maximum when the frequency of the applied wave is minimum.

While I have shown and described a particular embodiment of my invention, it will be obvious to those skilled in the art that changes and modifications may be made without departing from my invention in its broader aspects, and I, therefore, aim in the appended claims to cover all such changes and modifications as fall within the true spirit and scope of my invention.

What I claim as new and desire to secure by Letters Patent of the United States is:

1. In combination, a visual indicating device having a fluorescent surface and means including a control electrode for producing fluorescence over a portion of the area of said surface variable in response to voltage on said control electrode, a source of alternating voltage whose frequency may vary over a range of frequencies over which indications of frequency are desired, and low pass filter means for applying said alternating voltage to said control electrode attenuated in progressively increasing amounts as the frequency of such voltage increases, the attenuation of said voltage being substantially a maximum at an extreme frequency of said range and being progressively smaller at frequencies removed from said extreme frequency, whereby minimum visual indication is produced by said device when the frequency of said voltage is high and progressively greater indication is produced as the frequency of said voltage approaches zero.

2. In combination, a visual indicating device having means for producing a light pattern of area variable in response to a control voltage applied to said device, a source of alternating voltage whose frequency may vary over a range of frequencies over which indications of frequency are desired, and low pass filter means for applying said alternating voltage to said device attenuated by progressively increasing amounts as the frequency of such voltage increases over said range of frequencies, whereby minimum visual indication is produced by said device when the frequency of said voltage is high and progressively greater indication is produced by said device as the frequency of said voltage approaches zero.

3. In combination, a visual indicating device having means for producing a light pattern of area variable in response to a control voltage applied to said device, high pass filter means and low pass filter means connected in cascade for applying a control voltage to said device attenuated in progressively decreasing amounts as the frequency of such voltage decreases toward a predetermined value and attenuated in progressively increasing amounts as the frequency of such voltage decreases further approaching a zero value, whereby minimum visual indication is produced by said device when the frequency of said voltage is high and progressively greater indication is produced by said device as the frequency of said voltage decreases toward said predetermined value, the visual indication produced by said device decreasing as the frequency of said voltage decreases further.

4. In combination, a visual indicating device having a fluorescent surface, electron emitting means for bombarding said fluorescent surface uniformly with electrons to produce fluorescence uniformly thereover, a control electrode positioned between said electron emitting means and said surface, means for maintaining said control electrode at a positive potential with respect to said electron emitting means whereby electrons traveling from said emitting means to said surface near said control electrode are captured thereby to produce a sharply defined edge to the area of bombardment of said surface by said electrons, said control electrode being effective upon the application of a postive control voltage thereto to vary the area of electron bombardment of said surface and the area of consequent fluorescence, and high pass filter means, and low pass filter means connected in cascade for supplying a control voltage to said control electrode attenuated in progressively decreasing amounts as the frequency of such voltage decreases toward a predetermined value and attenuated in progressively increasing amounts as the frequency of such voltage decreases further, whereby minimum visual indication is produced by said device when the frequency of said voltage is high and progressively greater indication is produced by said device as the frequency of said voltage decreases toward said predetermined value, the visual indication produced by said device decreasing as the frequency of said voltage decreases further.

5. In combination, a source of voltage of known frequency, a source of voltage of variable frequency to be calibrated in terms of the frequency of voltage from said first source, means for producing heterodyne action between the voltages from said two sources to produce a resultant wave whose frequency is equal to the difference between the frequencies of the voltages from said two sources, a visual indicating device having a control electrode and means for producing a light pattern whose area varies in response to voltage on said electrode, and high pass filter means and low pass filter means connected in cascade for applying said waves to said control electrode attenuated in progressively decreasing amounts as the frequency of said wave decreases toward a predetermined value and attenuated in progressively increasing amounts as the frequency of such voltage decreases further, whereby minimum visual indication is produced by said device when the frequency of said wave is high and progressively greater indication is produced by said device as the frequency of said wave decreases toward said predetermined value, the visual indication produced by said device decreasing as the frequency of said voltage decreases further thereby to facilitate adjusting the frequency of voltage from said second source to be equal to the frequency of voltage from said first source.

REGINALD L. DOWNEY.