Sept. 4, 1951 J. O. KRIHWAN 2,566,667

MERCHANDISE PACKAGE

Filed Feb. 27, 1948 2 Sheets-Sheet 1

FIG. 1.

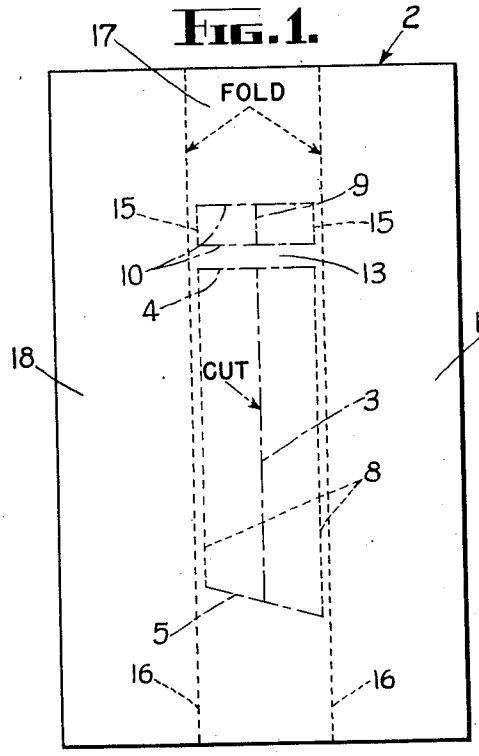

FIG. 2.

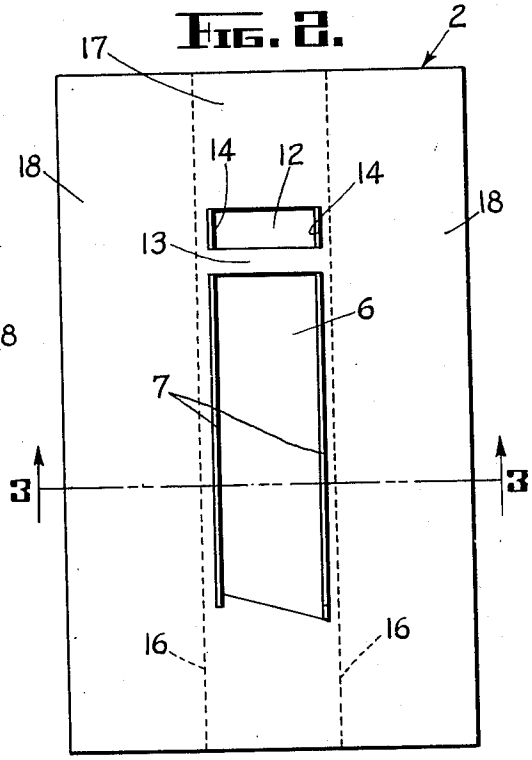

FIG. 4.

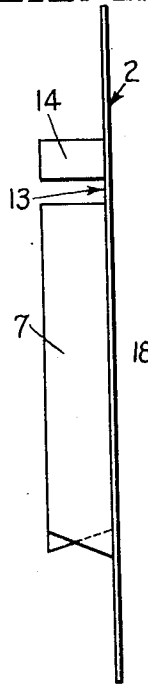

FIG. 5.

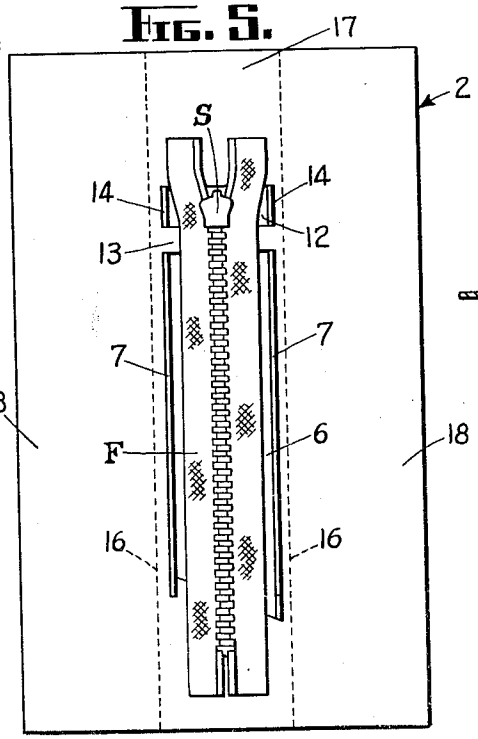

FIG. 3.

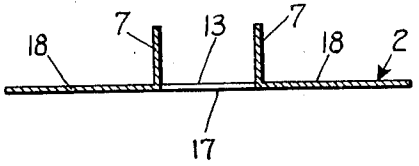

INVENTOR.
JULIUS O. KRIHWAN.
BY R. E. Meech
ATTORNEY.

Sept. 4, 1951 J. O. KRIHWAN 2,566,667

MERCHANDISE PACKAGE

Filed Feb. 27, 1948 2 Sheets-Sheet 2

FIG. 6.

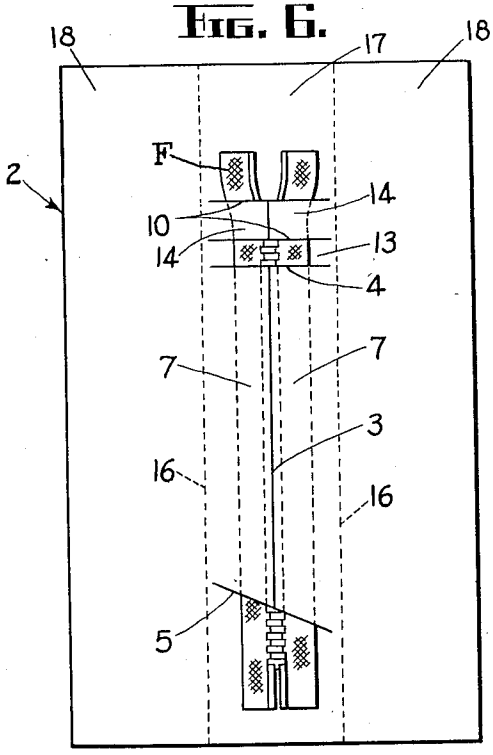

FIG. 7.

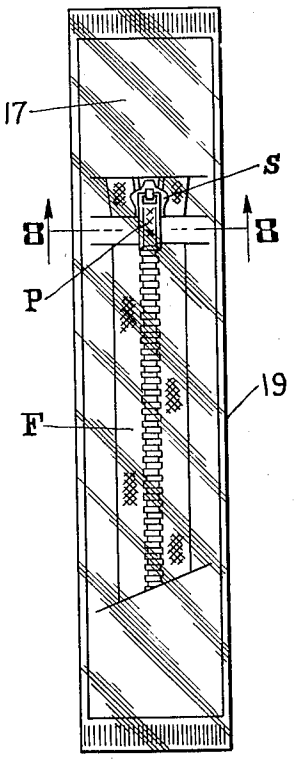

FIG. 8.

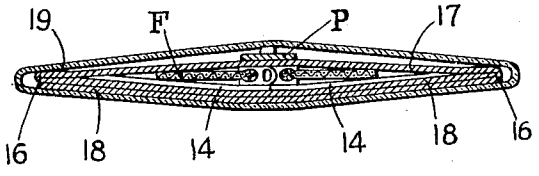

INVENTOR.
JULIUS O. KRIHWAN.
BY R. E. Mecch
ATTORNEY.

Patented Sept. 4, 1951

2,566,667

UNITED STATES PATENT OFFICE

2,566,667

MERCHANDISE PACKAGE

Julius O. Krihwan, Erie, Pa., assignor to Talon, Inc., a corporation of Pennsylvania

Application February 27, 1948, Serial No. 11,371

3 Claims. (Cl. 206—78)

1

This invention relates to packaging of merchandise, and particularly to an improved package for displaying and merchandising slide fasteners and the like.

It is the customary practice especially for over-the-counter or retail sale to provide a merchandise package for housing and displaying slide fasteners or "zippers," as they are more commonly called. Such a package should be designed so that the fastener is adequately displayed therein and, at the same time, securely held in position so as not to be displaced therefrom during shipping and other handling. Also, such a package should be inexpensive and one in which the fastener can be conveniently and economically contained.

Accordingly, it is one of the objects of the present invention to provide an improved merchandise package for slide fasteners which is simple and inexpensive in its construction, and, at the same time, a package in which the fastener can be easily and inexpensively mounted therein.

It is another object of the invention to provide such a package which will display adequately the fastener, and, at the same time, a package in which the fastener is securely held therein so as not to become accidentally displaced from position therein.

It is a further object of this invention to provide a merchandise package in the form of a folder or envelope which can conveniently carry advertising matter and illustrated instructions, and one which lends itself to greater ease in handling and selling.

Various other objects and advantages of this invention will be more apparent in the course of the following specification, and will be particularly pointed out in the appended claims.

In the accompanying drawings, there is shown for the purpose of illustration, an embodiment which my invention may assume in practice.

In these drawings:

Fig. 1 is a plan view of the inner side of a blank sheet of material from which the improved package of the present invention is made, showing the first steps in forming the same;

Fig. 2 is a plan view of the blank sheet, as shown in Fig. 1, showing the next step of preparing the package;

Fig. 3 is a sectional view taken on line 3—3 of Fig. 2;

Fig. 4 is a side view of the blank sheet as shown in Fig. 2;

Fig. 5 is a plan view of the blank sheet, as

2

shown in Fig. 2, showing a fastener positioned thereon in readiness to be packaged;

Fig. 6 is a plan view of the unfolded package, as shown in Fig. 5, showing the retaining flaps overlapping the fastener, and the first step in folding the blank to form the package;

Fig. 7 is a front view of my improved package, showing it completely folded and containing a fastener, with the package enclosed in a cellophane envelope ready for merchandising; and

Fig. 8 is a sectional view taken on line 8—8 of Fig. 7.

Referring more particularly to the drawings, there is shown in Fig. 1, a rectangular-shaped blank sheet of material 2 consisting preferably of a relatively heavy piece of paper or lightweight cardboard, showing the first steps in the fabrication of the improved merchandise package of the present invention. This blank is initially prepared by cutting the material longitudinally and centrally thereof along the broken line 3 and at spaced points at the top and bottom thereof transversely, as at 4 and 5, so as to provide an elongated aperture 6 therein, as shown in Fig. 2, which is adapted to function as a window for a purpose hereinafter to be described. The transverse cut 5 adjacent the bottom of the sheet is cut preferably angularly as shown. By cutting the material in such a manner, it will be seen that there is provided a pair of flaps 7 with one disposed to either side of the aperture 6 with the flaps being hinged along the dotted lines 8.

Directly above the aperture 6, the material is also cut longitudinally and centrally along the broken line 9, and transversely at spaced-apart points along the broken lines 10, so as provide another relatively narrow aperture 12 which is spaced from the aperture 6 by a relatively narrow portion 13 of material. By providing the aperture 12, there is likewise provided a pair of flaps 14 with one disposed to either side of the aperture 12. These flaps are hinged along the broken lines 15. The blank 2 is then folded longitudinally thereof along the broken lines 16 so as to provide three panels substantially identical in size, namely, a front panel 17 and two rear panels 18, so as to provide a package in the form of a folder or envelope. Both sets of flaps 14 and 7 are then bent inwardly of the panel 17 so as to be disposed substantially perpendicular to this panel, as shown in Figs. 2 through 4 of the drawings, and this completes the fabrication of the package. It is usually the practice to print advertising matter on the face of the front and rear panels and il-

lustrated instructions on the inner side of these panels for instructing the customer how to apply the fastener to a garment or other article.

The fastener F to be packaged is then positioned on the inner side of the front panel, as shown in Fig. 5, between the pairs of flaps 7 and 14 so as to bridge both the apertures 6 and 12 and overlie the narrow portion 13, with the slider S being exposed to view to the outer side of the front panel 17 through the upper aperture 12 above the transversely extending narrow portion 13, and the lower portion of the fastener being exposed to view through the aperture 6. In such position, the pull member P of the fastener, upon which the manufacturer's trade-mark is generally imprinted, will lie on the outer side of the narrow portion 13 so as to be in full view.

Both pairs of flaps 7 and 14 are then folded inwardly against the inner side of the fastener, as shown in Fig. 6, so that their longitudinal edges substantially abut each other. In such position, it will be seen that the parting line of these flaps will be disposed centrally of the respective panels and substantially centrally of the fastener so as to be hidden from view from the front face of the panel. The two rear panels 18 are then folded one over the other in overlapping relation, as shown in Fig. 8, with either one or the other disposed directly next to the inner side of the flaps 7 and 14 so as to maintain the flaps and fastener securely in position on the front panel. The fastener is now securely contained in the folder or envelope package and this folder is then preferably contained in a cellophane envelope 19, as shown in Figs. 7 and 8 of the drawings.

By providing such construction, it will be seen that the aperture 6 provides a window for adequately exposing to view a substantial portion of the fastener, and that the aperture 12 exposes to view the slider and pull member. The narrow portion 13 of the front panel cooperates with the slider and pull member to prevent the fastener from shifting endwise or longitudinally of the folder or envelope and the termination of the cuts formed by the providing of the windows 6 and 12, together with the flaps 7 and 14, tend to prevent any sidewise movement of the fastener on the panel thereby holding the fastener securely in position in the envelope at all times and preventing it from escapement therefrom.

As a result of my invention, it will be seen that there is provided an improved and novel display merchandise package which not only displays adequately the fastener but, at the same time, provides a merchandise package which is attractive and one which can be easily handled and sold.

While I have shown and described an embodiment which my invention may assume in practice, it will be understood that this embodiment is merely for the purpose of illustration and description, and that other forms may be devised within the scope of my invention as defined in the appended claims.

What I claim as my invention is:

1. A merchandise package of the class described, comprising an elongated panel having an aperture therein elongated in a direction longitudinally thereof, said panel having another relatively small aperture arranged therein at a spaced distance above said elongated aperture so as to provide a bridge portion therebetween, a slide fastener disposed on the inner side of said panel bridging both of said apertures and said bridge portion with the slider of said fastener disposed in said second mentioned aperture and the pull member thereof lying upon the outer side of said panel and over said bridge portion of said panel.

2. A merchandise package of the class described, comprising an elongated front panel and two elongated rear panels each of which is a folded extension of said front panel, said front panel having an aperture therein elongated in a direction longitudinally of said panel, another relatively small aperture arranged in said front panel at a spaced distance above said elongated aperture so as to provide a narrow bridge portion therebetween, a slide fastener disposed on the inner side of said panel bridging both of said apertures and said bridge portion with the slider of said fastener disposed in said relatively small aperture and the pull member thereof lying upon the outer side of said panel and over said bridge portion, a flap portion arranged integral with the edge of each of said apertures and which extends inwardly and lies over the inner side of said fastener so as to aid in holding it in position on said panel, both of said rear panels being folded one over the other in overlapping relation against the inner side of said flap portions and said fastener so as to envelop the same.

3. A merchandise package of the class described comprising an elongated panel having an aperture therein elongated in a direction longitudinally thereof, said panel having another relatively small aperture arranged therein at a spaced distance above said small aperture so as to provide a bridge portion therebetween, a slide fastener disposed on the inner side of said panel bridging both of said apertures and said bridge portion with the slider disposed in said second mentioned aperture and the pull member thereof lying upon the outer side of said panel over said bridge portion, and a flap portion extending along the edge of at least one of said apertures and arranged integral with said panel and which extends and lies over the inner side of said fastener so as to aid in holding the fastener in position on said panel.

JULIUS O. KRIHWAN.

REFERENCES CITED

The following references are of record in the file of this patent:

UNITED STATES PATENTS

Number	Name	Date
1,712,337	Emrich	May 7, 1929
2,280,503	Traum	Apr. 21, 1942
2,332,412	Taylor	Oct. 19, 1943
2,415,151	Taylor	Feb. 4, 1947