Office de la Propriété Intellectuelle du Canada
Un organisme d'Industrie Canada

Canadian Intellectual Property Office
An agency of Industry Canada

CA 2531841 A1 2005/01/27

(21) 2 531 841

(12) DEMANDE DE BREVET CANADIEN
CANADIAN PATENT APPLICATION

(13) A1

(86) Date de dépôt PCT/PCT Filing Date: 2004/07/09
(87) Date publication PCT/PCT Publication Date: 2005/01/27
(85) Entrée phase nationale/National Entry: 2006/01/09
(86) N° demande PCT/PCT Application No.: US 2004/021908
(87) N° publication PCT/PCT Publication No.: 2005/007517
(30) Priorité/Priority: 2003/07/09 (60/485,674) US

(51) Cl.Int./Int.Cl. *B65D 25/32* (2006.01), *B65D 25/28* (2006.01), *B44D 3/14* (2006.01), *B44D 3/12* (2006.01)

(71) Demandeur/Applicant:
MASTERCHEM INDUSTRIES, LLC, US

(72) Inventeurs/Inventors:
MANKE, SCOTT G., US;
GILBERTSON, MARK A., US;
WOODS, DAVID N., US

(74) Agent: BERESKIN & PARR

(54) Titre : POIGNEE DE RECEPTACLE DE PEINTURE
(54) Title: PAINT CONTAINER HANDLE

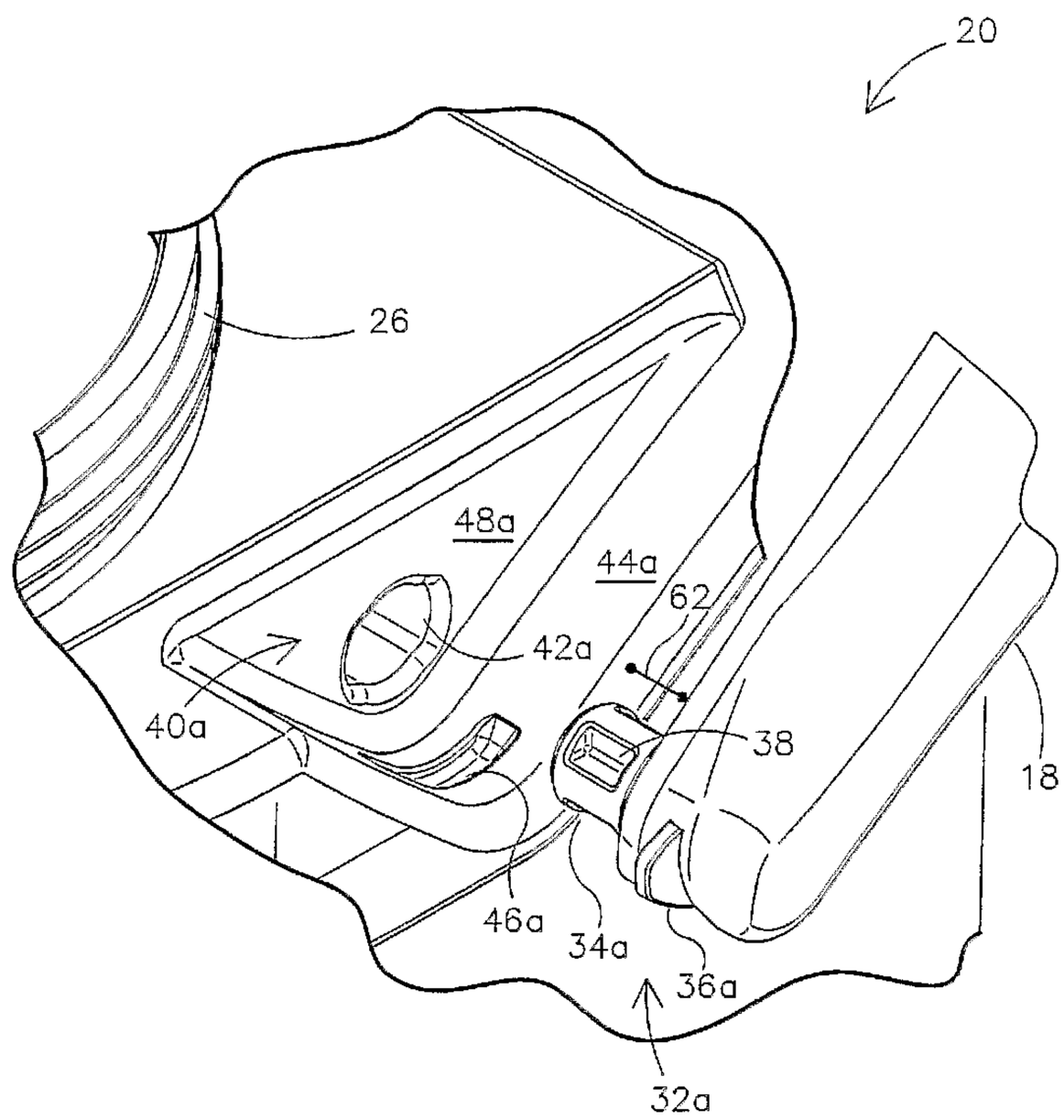

(57) Abrégé/Abstract:
A system for containing paint is disclosed. The system comprises a body (12) between a cover (28) and a base (16). The system also comprises a handle (18) configured for attachment to the body (12) and selectively configurable between a first position and a second position. The system also comprises a locking mechanism (30). The locking mechanism (30) comprises a protrusion (34a, 34b) configured for insertion into a recess (42a, 42b) of the body. The locking mechanism (30) also comprises a tab of the handle configured for selective insertion into a track of the body. The locking mechanism (30) is configured to inhibit movement of the handle in at least two planes when the handle is in the first position. A method of using a container for paint is also disclosed. A system for containing paint comprising means for locking the handle to the body is also disclosed.

(12) INTERNATIONAL APPLICATION PUBLISHED UNDER THE PATENT COOPERATION TREATY (PCT)

(19) World Intellectual Property Organization
International Bureau

(43) International Publication Date
27 January 2005 (27.01.2005)

PCT

(10) International Publication Number
WO 2005/007517 A3

(51) International Patent Classification[7]: B65D 25/32, B44D 3/14, 3/12, B65D 25/28

(21) International Application Number: PCT/US2004/021908

(22) International Filing Date: 9 July 2004 (09.07.2004)

(25) Filing Language: English

(26) Publication Language: English

(30) Priority Data:
60/485,674 9 July 2003 (09.07.2003) US

(71) Applicant *(for all designated States except US)*: **MASTERCHEM INDUSTRIES, LLC** [US/US]; 3135 Old Hwy. M, Imperial, MO 63052 (US).

(72) Inventors; and
(75) Inventors/Applicants *(for US only)*: **MANKE, Scott, G.** [US/US]; 1318 Gray Hawk Way, Sun Prairie, WI 53590 (US). **GILBERTSON, Mark, A.** [US/US]; W14410 Vista View Court, Prairie du Sac, WI 53578 (US). **WOODS, David, N.** [US/US]; 7413 Sawmill Road, Madison, WI 53171 (US).

(74) Agent: **LINDENBAUM, Keith, D.**; Foley & Lardner LLP, 777 East Wisconsin Avenue, Suite 3800, Milwaukee, WI 53202-5306 (US).

(81) Designated States *(unless otherwise indicated, for every kind of national protection available)*: AE, AG, AL, AM, AT, AU, AZ, BA, BB, BG, BR, BW, BY, BZ, CA, CH, CN, CO, CR, CU, CZ, DE, DK, DM, DZ, EC, EE, EG, ES, FI, GB, GD, GE, GH, GM, HR, HU, ID, IL, IN, IS, JP, KE, KG, KP, KR, KZ, LC, LK, LR, LS, LT, LU, LV, MA, MD, MG, MK, MN, MW, MX, MZ, NA, NI, NO, NZ, OM, PG, PH, PL, PT, RO, RU, SC, SD, SE, SG, SK, SL, SY, TJ, TM, TN, TR, TT, TZ, UA, UG, US, UZ, VC, VN, YU, ZA, ZM, ZW.

(84) Designated States *(unless otherwise indicated, for every kind of regional protection available)*: ARIPO (BW, GH, GM, KE, LS, MW, MZ, NA, SD, SL, SZ, TZ, UG, ZM, ZW), Eurasian (AM, AZ, BY, KG, KZ, MD, RU, TJ, TM), European (AT, BE, BG, CH, CY, CZ, DE, DK, EE, ES, FI, FR, GB, GR, HU, IE, IT, LU, MC, NL, PL, PT, RO, SE, SI, SK, TR), OAPI (BF, BJ, CF, CG, CI, CM, GA, GN, GQ, GW, ML, MR, NE, SN, TD, TG).

[Continued on next page]

(54) Title: PAINT CONTAINER HANDLE

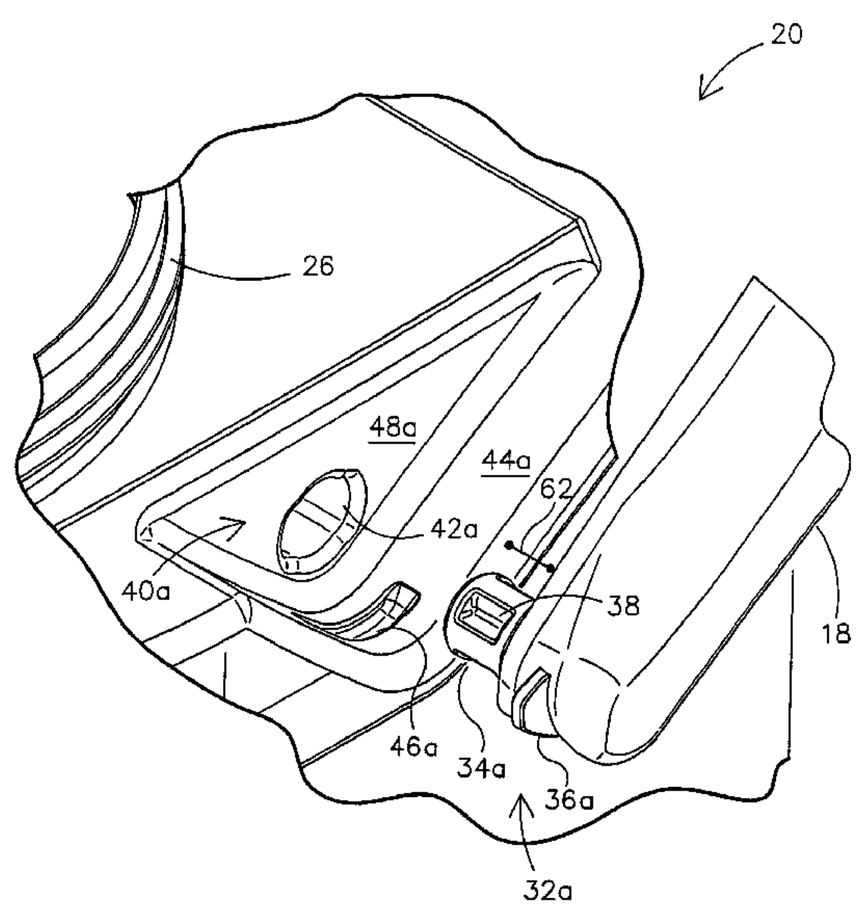

(57) Abstract: A system for containing paint is disclosed. The system comprises a body (12) between a cover (28) and a base (16). The system also comprises a handle (18) configured for attachment to the body (12) and selectively configurable between a first position and a second position. The system also comprises a locking mechanism (30). The locking mechanism (30) comprises a protrusion (34a, 34b) configured for insertion into a recess (42a, 42b) of the body. The locking mechanism (30) also comprises a tab of the handle configured for selective insertion into a track of the body. The locking mechanism (30) is configured to inhibit movement of the handle in at least two planes when the handle is in the first position. A method of using a container for paint is also disclosed. A system for containing paint comprising means for locking the handle to the body is also disclosed.

WO 2005/007517 A3

WO 2005/007517 A3

Published:

— *with international search report*

— *before the expiration of the time limit for amending the claims and to be republished in the event of receipt of amendments*

(88) Date of publication of the international search report:
9 June 2005

For two-letter codes and other abbreviations, refer to the "Guidance Notes on Codes and Abbreviations" appearing at the beginning of each regular issue of the PCT Gazette.

PAINT CONTAINER HANDLE

CROSS-REFERENCE TO RELATED PATENT APPLICATIONS

[0001] This application claims the benefit of U.S. Provisional Application No. 60/485,674 filed July 9, 2003, which is incorporated herein by reference.

[0002] The following U.S. Patent Applications are cited by reference and incorporated by reference herein: U.S. Patent Application No. 10/255,564 titled "CONTAINER" filed September 25, 2002, which is a continuation-in-part of U.S. Patent Application No. 10/132,682 titled "CONTAINER" filed April 25, 2002, which is a continuation-in part of U.S. Patent Application No. 10/006,985 titled "PAINT CONTAINER" filed December 5, 2001.

FIELD

[0003] The present invention relates generally to the field of a paint container and more particularly to a system for containing paint having a locking mechanism for inhibiting movement of a handle in at least two planes.

BACKGROUND OF THE INVENTION

[0004] It is generally known to provide a container for paint. Such known containers are typically a cylindrical one gallon metal container. The metal container includes a round base and a cylindrical side wall attached to and extending from the base.

[0005] The handle of such known containers is a thin curved wire member comprised of a 0.105 gauge material. However, such handle digs into a user's hand under the weight of the paint and the container, and makes such known metal containers difficult to carry. Further, the curved wire handle requires handle pivot or "ear" supports to be added to the outer surface of the cylindrical can, which add assembly and material costs to the container. In addition, the handle may be inadvertently removed from the pivot supports.

Furthermore, the pivot supports affect how such known containers must be packed for shipping and for display. Since the pivot supports extend outward from such known containers, additional space between containers (or placement such that the pivot supports are in the "dead" space zone between the containers) is required.

[0006] It would be desirable to provide a paint container that is easy to hold using a handle. It would further be desirable to provide a paint container having a handle that is easy to install. It would further be desirable to provide a paint container having a handle that is securely locked to the container in the use and the storage positions. It would also be desirable to provide a container well-suited for packaging and shipping. It would still further be desirable to provide a paint container having one or more of these or other advantageous features.

SUMMARY OF THE INVENTION

[0007] The present invention relates to a system for containing paint. The system comprises a body between a cover and a base. The system also comprises a handle configured for attachment to the body and selectively configurable between a first position and a second position. The system also comprises a locking mechanism. The locking mechanism comprises a protrusion configured for insertion into a recess of the body. The locking mechanism also comprises a tab of the handle configured for selective insertion into a track of the body. The locking mechanism is configured to inhibit movement of the handle in at least two planes when the handle is in the first position.

[0008] The present invention also relates to a method of using a container for paint. The container comprises a body having a side wall between a cover and a base. The container also comprises a handle configured for attachment to the side wall. The container also comprises a first protrusion and a second protrusion of the handle each configured for insertion into at least one recess of the side wall. The container also comprises a tab of the handle configured for selective insertion into a track of the body. The method

comprises positioning the handle in an installation position. The method also comprises biasing the first protrusion away from the second protrusion. The method also comprises inserting the first protrusion in the recess of the side wall to inhibit movement of the handle between a forward position and a rearward position relative to the base.

[0009] The present invention also relates to a system for containing paint. The system comprises a body. The system also comprises a handle configured for attachment to the body and selectively configurable between a first position and a second position. The system also comprises means for locking the handle to the body. The means for locking is configured to inhibit movement of the handle in at least two planes when the handle is in the first position.

[0010] It is important to note that the term "paint" as used in this disclosure is intended to be a broad term and not a term of limitation. The term "paint" as used in this disclosure may include, without limitation any decorative or functional surface treatment, liquid dispersion, finish, surface finish, varnish, pigment, colorant, other coating, etc.

[0011] It is also important to note that the terms "up," "down," "forward," "aft," etc. as used in this disclosure with reference to the embodiments shown in the FIGURES are intended to be broad terms and not terms of limitation. It will be understood, however, that the paint container and the handle shown in the FIGURES may be positioned in any of a variety of orientations and the orientations illustrated in the FIGURES is not intended to be limiting.

BRIEF DESCRIPTION OF THE DRAWINGS

[0012] FIGURE 1 is an exploded perspective view of a system for containing paint according to a preferred embodiment.

[0013] FIGURE 2 is a perspective view of the system for containing paint of FIGURE 1 showing a handle in a storage position according to an exemplary embodiment.

[0014] FIGURE 3 is a perspective view of the system for containing paint of FIGURE 1 showing the handle in a use position according to an exemplary embodiment.

[0015] FIGURE 4 is a side elevation view of the system for containing paint of FIGURE 1 showing the handle in the use position according to an exemplary embodiment.

[0016] FIGURE 5 is a fragmentary exploded perspective view of the system for containing paint of FIGURE 1 according to a preferred embodiment.

[0017] FIGURE 6 is a fragmentary sectional view of a locking mechanism of the system for containing paint of FIGURE 1 showing the handle in the use position according to an exemplary embodiment.

DETAILED DESCRIPTION OF THE PREFERRED EMBODIMENTS

[0018] Referring to FIGURE 1, a system for containing paint (shown as a paint container 10) is shown according to a preferred embodiment. Container 10 includes a body 12 formed by a vertical side wall 14 extending between a horizontal cover 28 and a horizontal base 16. A bail or handle 18 is attached to side wall 14 of body 12 by a locking system or mechanism 30. Handle 18 is selectively configurable between a horizontal "down" or closed storage position 20 (see FIGURE 2) and a vertical "up" or open use position 22 (see FIGURE 3). A cap or lid 24 is shown in FIGURE 2 threadably attached to a neck 26 having a pour spout 56 (see FIGURE 1) which may be selectively inserted into neck 26 for removing paint from container 10.

[0019] Referring to FIGURES 2 and 5, locking mechanism 30 includes a first butt or male portion 32a and a second male portion 32b, each respectively terminating from an end of handle 18. Locking mechanism 30 also includes a first female portion 40a and a second female portion 40b, each respectively in side wall 14 of body 12. Male portions 32a and 32b each comprise a cylindrical member or first protrusion 34a and a second protrusion 34b. A distance 50 extends between first protrusion 34a and second protrusion 34b of the respective ends of handle 18 (see FIGURE 1). Male portions 32a and 32b each

also comprise a wedge-shaped "ear" or a first tab 36a and a second tab 36b, each respectively extending from the respective ends of handle 18 (see FIGURE 4). Protrusion 34a and a corresponding protrusion 34b may have a cutout 38 as shown in FIGURES 5 and 6 according to an alternative embodiment. The protrusion also may have a "+" or cross shape according to another alternative embodiment.

[0020] Referring further to FIGURES 1 and 5, female portions 40a and 40b of locking mechanism 30 comprise a cylindrical shaped cavity or first recess 42a and a second recess 42b, each respectively in side wall 14. Recess 42a and recess 42b each may have a "+" or cross shape corresponding to the shape of the protrusion according to an alternative embodiment as shown in FIGURES 1 and 5.

[0021] A first horizontal land 44a and a second horizontal land 44b are each respectively offset from side wall 14 according to a preferred embodiment as shown in FIGURES 1 and 5. A track or first groove 46a and a track or second groove 46b each respectively extend into horizontal land 44a and horizontal land 44b according to a preferred embodiment as shown in FIGURES 1 and 5. A first vertical land 48a and a second vertical land 48b are each respectively offset from side wall 14 according to a preferred embodiment as shown in FIGURES 1 and 5. A first recess 42a and a second recess 42b each respectively extend into vertical land 48a and vertical land 48b according to a preferred embodiment as shown in FIGURES 1 and 5.

[0022] According to a preferred embodiment as shown in FIGURES 1 and 5, horizontal land 44a and horizontal land 44b are each respectively generally perpendicular to vertical land 48a and vertical land 48b. According to a preferred embodiment as shown in FIGURES 1 and 5, handle 18 in storage position 20 rests against a portion 64 of horizontal land 44a. The horizontal and vertical lands may be in any part of the body, including the side wall or the cover according to any preferred or alternative embodiment. According to a preferred embodiment as shown in FIGURE 1, horizontal land 44b is contiguous

with side wall 14 and vertical land 48b, and vertical land 48b is contiguous with cover 28.

[0023] A non-circular cross-section of protrusion 34a and protrusion 34b each respectively provide an interference fit with recess 42a and recess 42b (respectively) as handle 18 is pivoted between storage position 20 and use position 22 (see FIGURE 5). The interference fit between protrusion 34a in recess 42a and tab 36a in groove 46a each respectively assists in maintaining or retaining handle 18 in any position (e.g. an intermediate position between the fully closed position and the fully opened position). The interference fit acts to both hold the handle at a given position as well as resist movement relative to the body.

[0024] Handle 18 may be pivoted (e.g. manually by a user) between storage position 20 and use position 22. In use position 22, protrusion 34a is inserted in recess 42a, and tab 36a is in groove 46a as shown in FIGURE 6. Tab 36a travels in groove 46a as handle 18 is pivoted between storage position 20 and use position 22.

[0025] In use position 22, the top surface of protrusion 34a engages the outer wall of recess 42a to support the weight of container 10 (see FIGURE 6). Protrusion 34a inhibits handle 18 from fore and aft movement along a vector 52 in a plane parallel to base 16. Tab 36a in groove 46a inhibits protrusion 34a from being removed from recess 42a (e.g. due to helical or twisting motion of handle 18 in use position 22 when container 10 is carried by a user) – thus inhibiting handle 18 from being moved in an inward and outward direction in a plane parallel to side wall 14 along a vector 54. Length 62 of protrusion 34a and protrusion 34b each respectively in recess 42a and recess 42b also inhibit handle 18 from being moved in the inward and outward direction in a plane parallel to side wall 14 along vector 54.

[0026] According to alternative embodiments, other mechanical fastening structures may also be employed for the locking mechanism. Additionally, a snap in feature that releasably locks the handle in the rest or in the use position may be helpful to ensure the handle does not move. The snap

or lock feature may be accomplished by irregular geometry of the handle tabs and land apertures, or any other known means for securing a handle in specific position relative to the container.

[0027] According to a preferred embodiment as shown in FIGURE 1, side wall 14 includes an inward recess 58 providing a display area for indicia (e.g. label). According to a preferred embodiment as shown in FIGURE 2, handle 18 is "flush" or even with side wall 14 (i.e. does not extend beyond the outer periphery of body 12) which may assist in storage and shipping of container 10. According to a preferred embodiment as shown in FIGURE 1, a region 66 of body 12 is "label free," intended in part to inhibit paint from spilling onto the label in the area proximate to spout 56.

[0028] According to a particularly preferred embodiment, the container has a perimeter that is "D"-shaped, a cross-section that is substantially "D"-shaped, and a substantially flat bottom that is substantially "D"-shaped. According to a particularly preferred embodiment, the container is configured to hold a volume of about one gallon of paint, and may have other volumes (e.g. one quart) according to other alternative embodiments. According to a particularly preferred embodiment, the lid of the container has an area of about 12.4 square inches. According to a particularly preferred embodiment, the container is of the type disclosed in U.S. Patent Application No. 10/255,564 titled "CONTAINER" filed September 25, 2002, which is a continuation-in-part of U.S. Patent Application No. 10/132,682 titled "CONTAINER" filed April 25, 2002, which is a continuation-in part of U.S. Patent Application No. 10/006,985 titled "PAINT CONTAINER" filed December 5, 2001.

[0029] Referring further to FIGURES 1 and 5, to install handle 18 on side wall 14, handle 18 is placed in storage position 20. Protrusion 34a is inserted into recess 42a. Protrusion 34b is biased away from protrusion 34a beyond vertical land 48b. Protrusion 34b is then inserted in recess 42b. According to a preferred embodiment, protrusion 34a may be biased toward protrusion 34b when handle 18 is in storage position 20 (e.g. due to an elastic or resilient property of the material or shape of the handle). Tab 36b is outside

of groove 46b (and tab 36a is outside of groove 46a) when handle 18 is in storage position 20 as shown in FIGURE 2 according to an exemplary embodiment.

[0030] To remove handle 18 from side wall 14, handle 18 is moved to storage position 20. Protrusion 34a is biased away from protrusion 34b (e.g. manually by a user). A length 62 of protrusion 34a is removed from recess 42a. Protrusion 34a is offset from recess 42a (e.g. by twisting or pivoting handle 18). Protrusion 34b is then removed from recess 42b.

[0031] It is important to note that the construction and arrangement of the elements of the paint container as shown in the preferred and other exemplary embodiments is illustrative only. Although only a few embodiments of the present invention have been described in detail in this disclosure, those skilled in the art who review this disclosure will readily appreciate that many modifications are possible (e.g. variations in sizes, dimensions, structures, shapes and proportions of the various elements, values of parameters, mounting arrangements, use of materials, orientations, etc.) without materially departing from the novel teachings and advantages of the subject matter recited in the claims. Accordingly, all such modifications are intended to be included within the scope of the present invention as defined in the appended claims. The order or sequence of any process or method steps may be varied or re-sequenced according to alternative embodiments. Other substitutions, modifications, changes and omissions may be made in the design, operating conditions and arrangement of the preferred and other exemplary embodiments without departing from the spirit of the present invention as expressed in the appended claims.

WHAT IS CLAIMED IS:

1. A system for containing paint comprising:

a body between a cover and a base;

a handle configured for attachment to the body and selectively configurable between a first position and a second position;

a locking mechanism comprising:

a protrusion configured for insertion into a recess of the body;

a tab of the handle configured for selective insertion into a track of the body;

wherein the locking mechanism is configured to inhibit movement of the handle in at least two planes when the handle is in the first position.

2. The system of Claim 1 wherein the protrusion comprises a first projection and is biased away from a second projection to remove the handle from the body.

3. The system of Claim 2 wherein the protrusion is configured to inhibit forward and backward movement of the handle relative to the base.

4. The system of Claim 3 wherein the tab is configured to inhibit inward and outward movement of the handle relative to a side wall of the body.

5. The system of Claim 4 wherein the tab is outside the track when the handle is in the storage position.

6. The system of Claim 5 wherein the tab is in the track when the handle is in the first position.

7. The system of Claim 5 wherein the protrusion is configured to be installed in the recess only when the handle is in the second position.

8. The system of Claim 5 wherein the side wall is an exterior wall of the body.

9. The system of Claim 5 wherein the body has a D-shape.

10. The system of Claim 5 wherein a cross section of the body has a D-shape.

11. The system of Claim 5 wherein the first position is a use position.

12. The system of Claim 5 wherein the first position is a vertical position.

13. The system of Claim 5 wherein the first position is an up position.

14. The system of Claim 5 wherein the second position is a storage position.

15. The system of Claim 5 wherein the second position is a horizontal position.

16. The system of Claim 5 wherein the second position is a down position.

17. The system of Claim 5 wherein the cover comprises a horizontal cover, the base comprises a horizontal base and the body comprises a vertical side wall.

18. A method of using a container for paint comprising a body having a side wall between a cover and a base, a handle configured for attachment to the side wall, a first protrusion and a second protrusion of the handle each configured for insertion into at least one recess of the side wall, and a tab of the handle configured for selective insertion into a track of the body, the method comprising:

positioning the handle to an installation position;

biasing the first protrusion away from the second protrusion;

inserting the first protrusion in the recess of the side wall to inhibit movement of the handle between a forward position and a rearward position relative to the base.

19. The method of Claim 18 further comprising positioning the handle in a use position wherein the tab is inserted in the track to inhibit movement of the handle between an inward position and an outward position relative to the side wall.

20. A system for containing paint comprising:

a body;

a handle configured for attachment to the body and selectively configurable between a first position and a second position;

means for locking the handle to the body;

wherein the means for locking the handle to the body is configured to inhibit movement of the handle in at least two planes when the handle is in the first position.

21. The system of Claim 20 wherein the means for locking comprises a protrusion configured for insertion into a recess of the body.

22. The system of Claim 21 wherein the means for locking further comprise a tab of the handle configured for selective insertion into a track of the body.

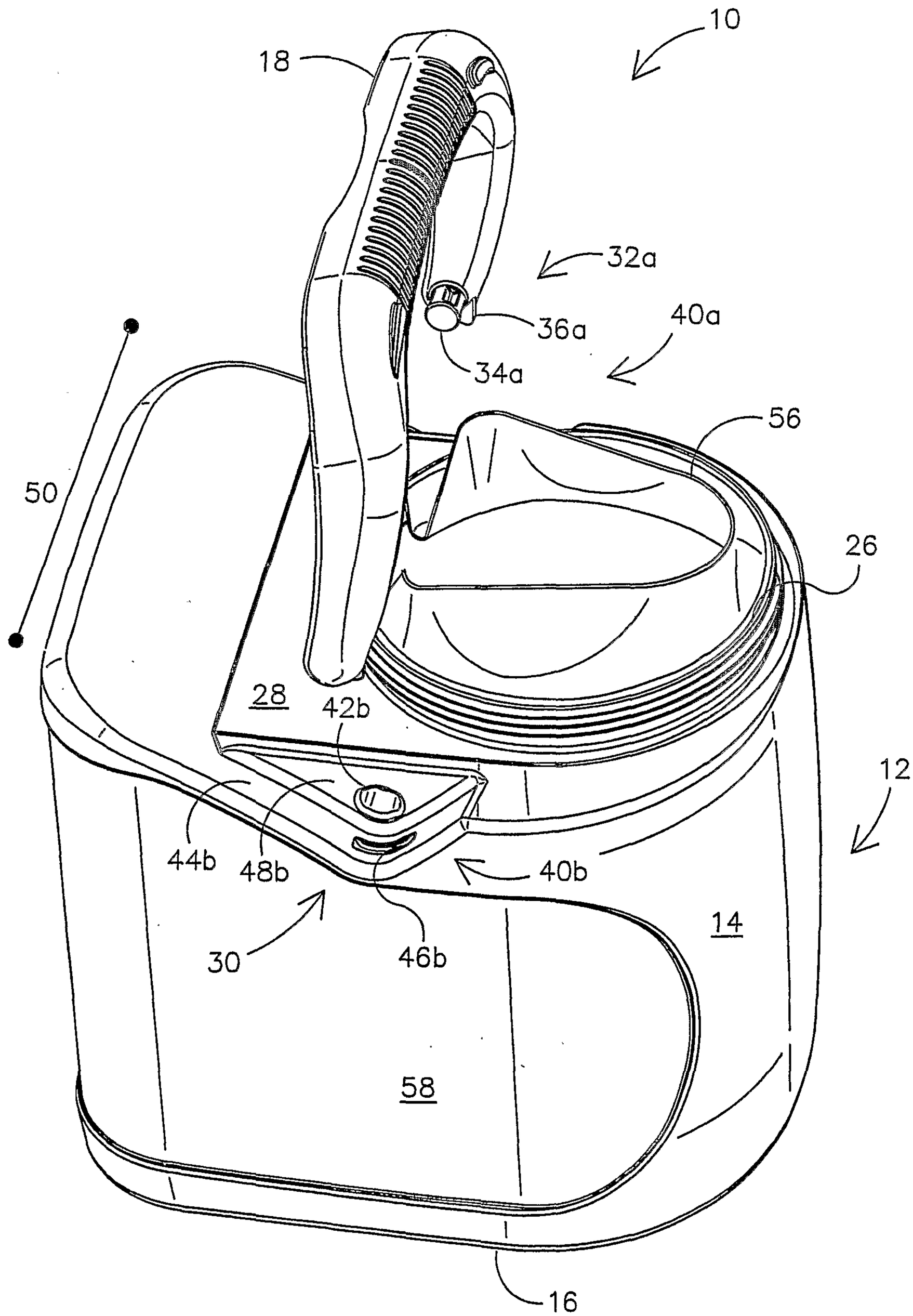

FIGURE 1

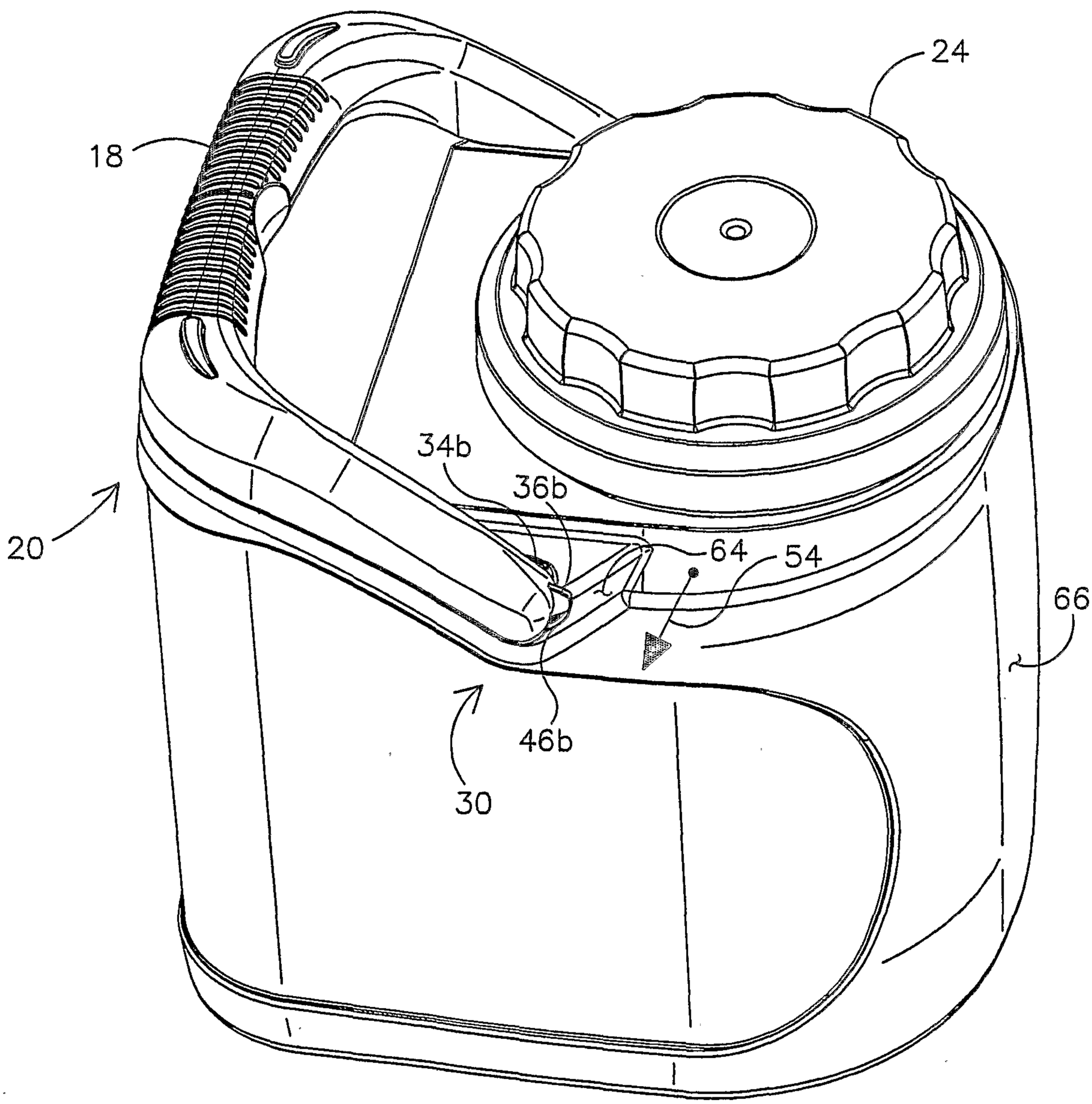

FIGURE 2

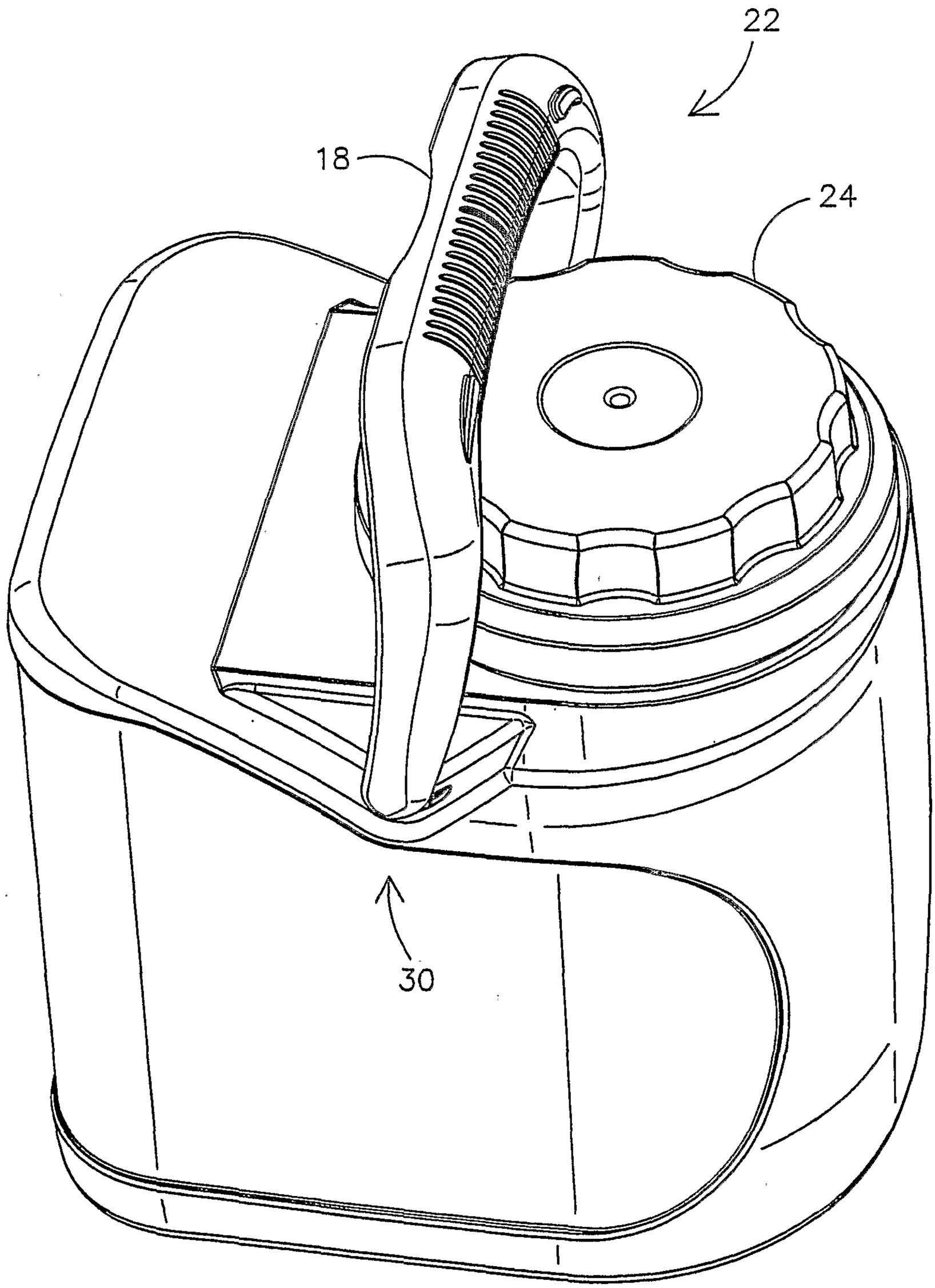

FIGURE 3

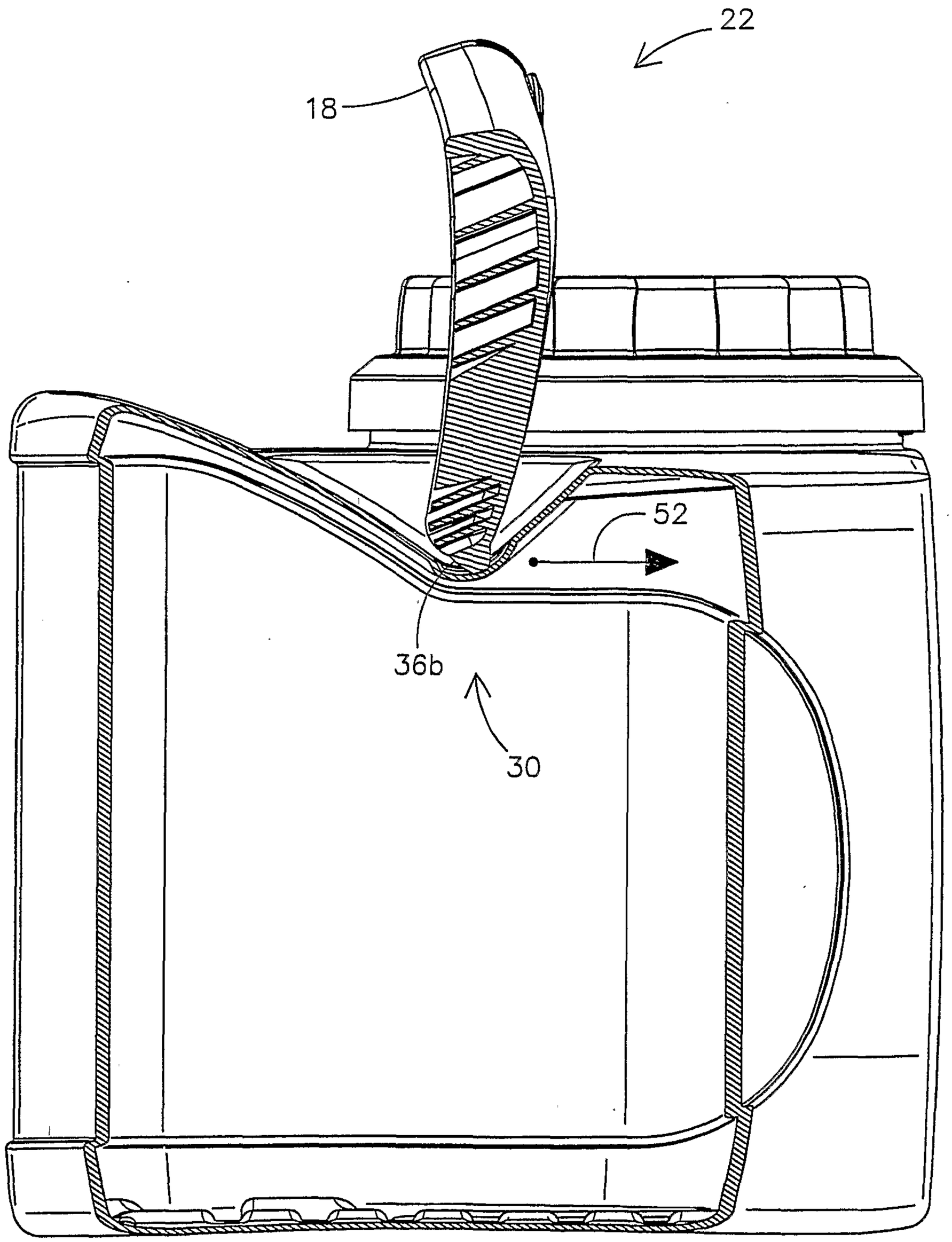

FIGURE 4

FIGURE 5

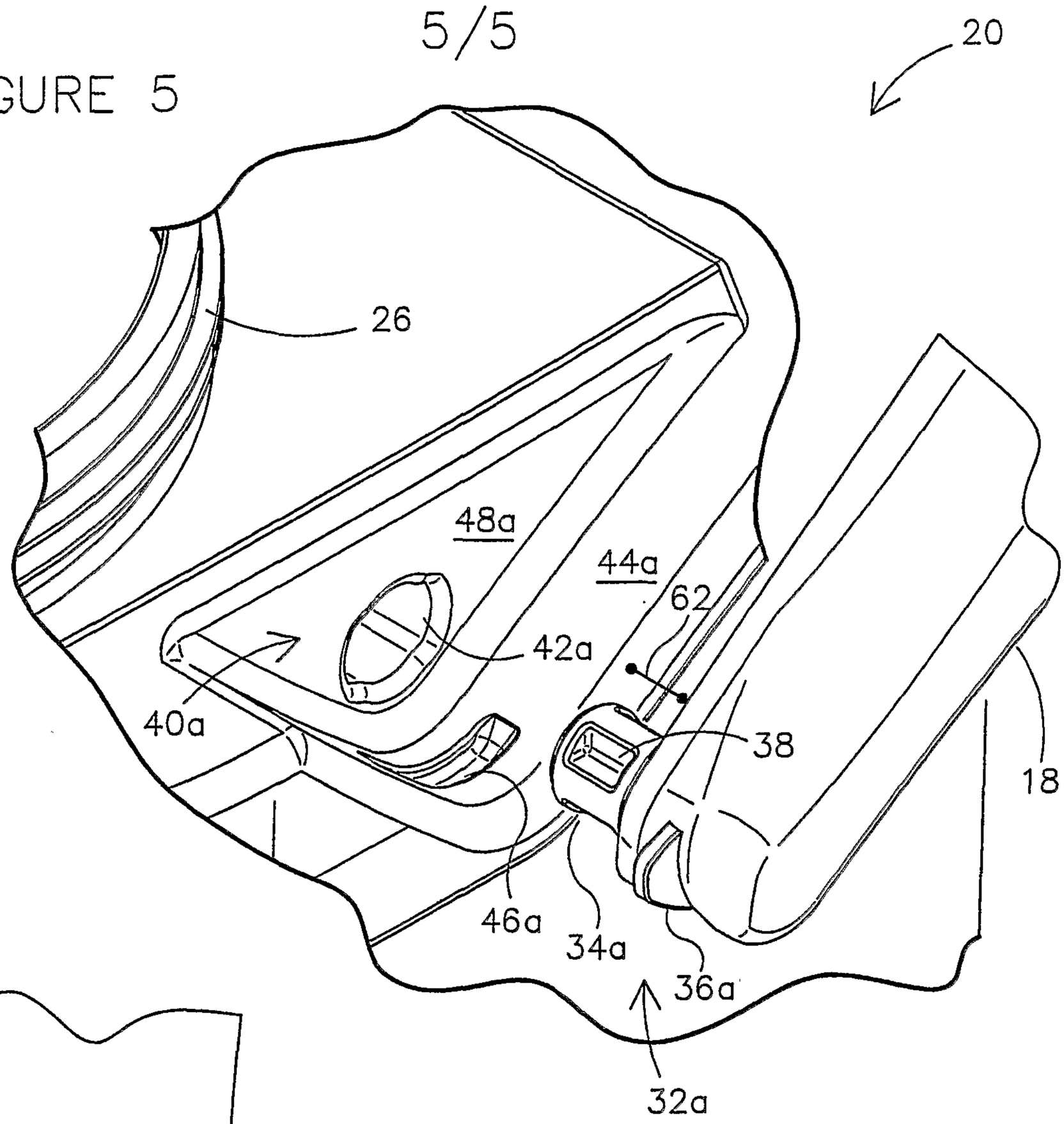

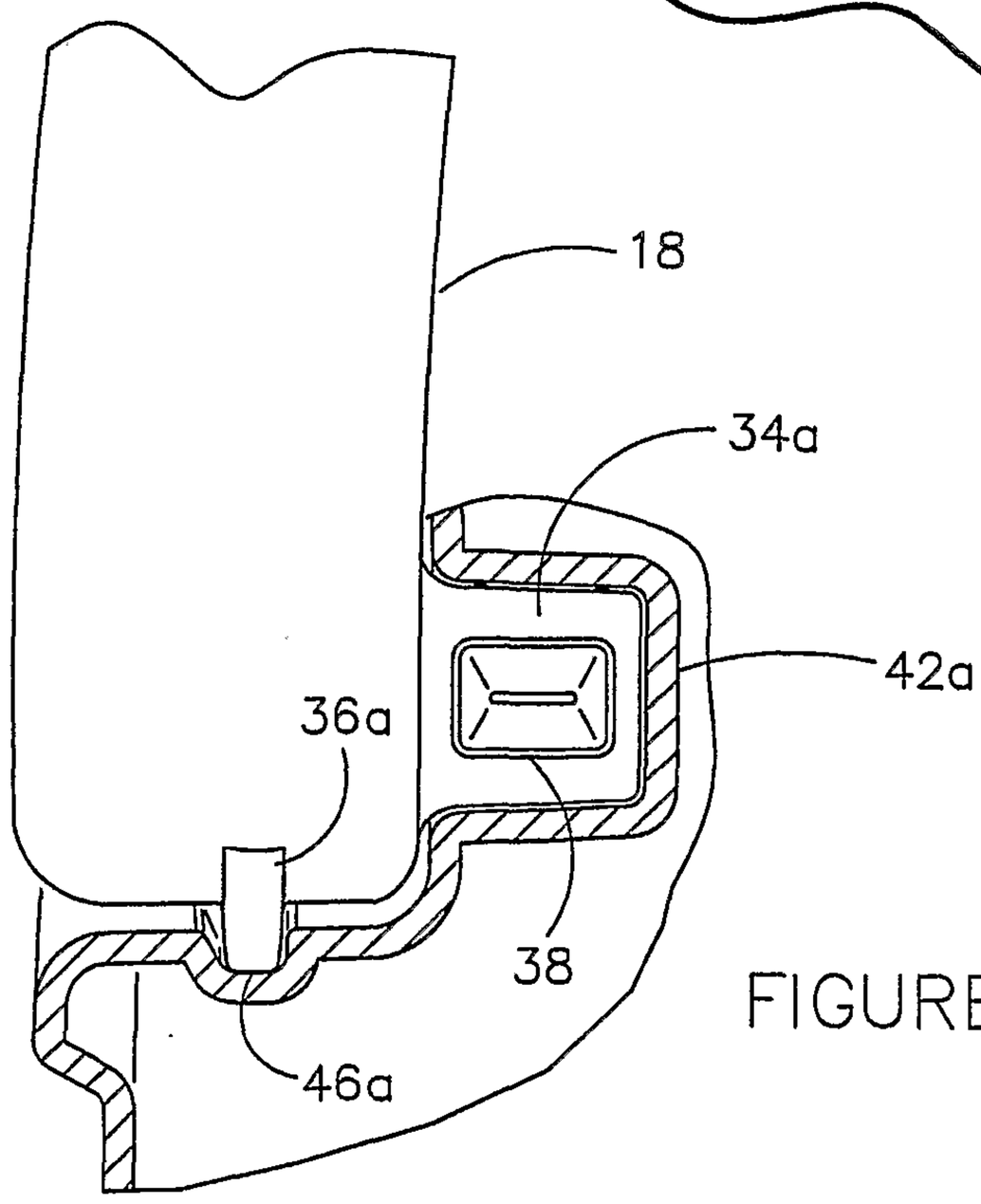

FIGURE 6

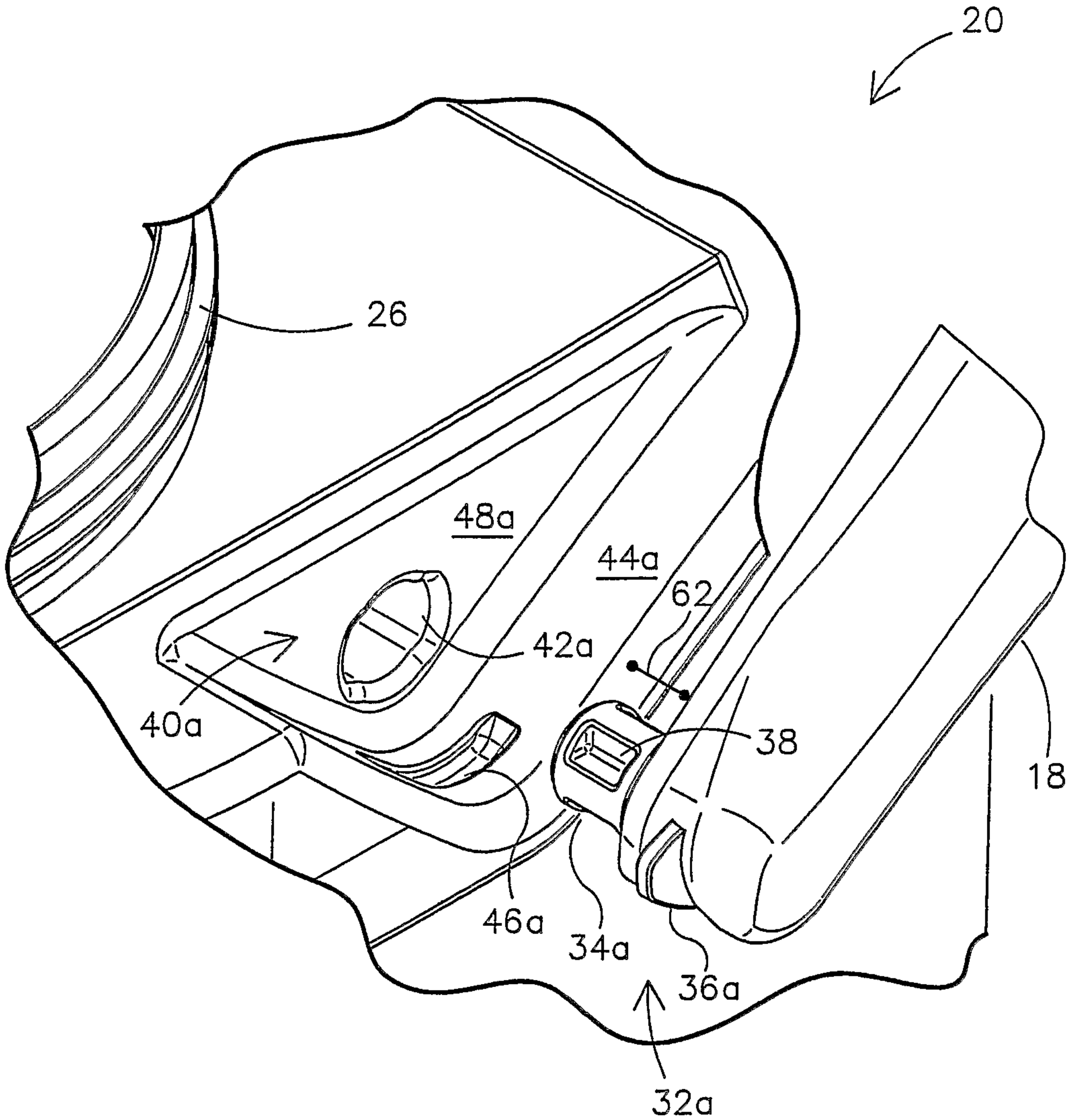
20
26
48a
44a
62
42a
40a
38
18
46a
34a
36a
32a