G. PAYNE & W. J. GALBRAITH.

OPERATING ADJUSTABLE TABLE.

APPLICATION FILED JAN. 20, 1913.

1,082,043. Patented Dec. 23, 1913.

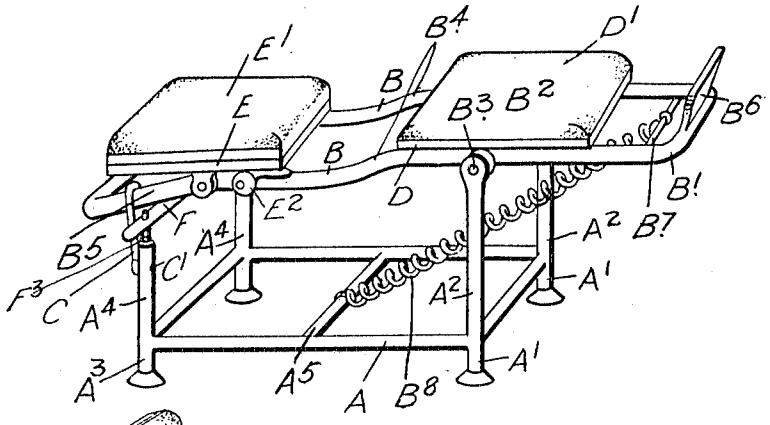

FIG. 1.

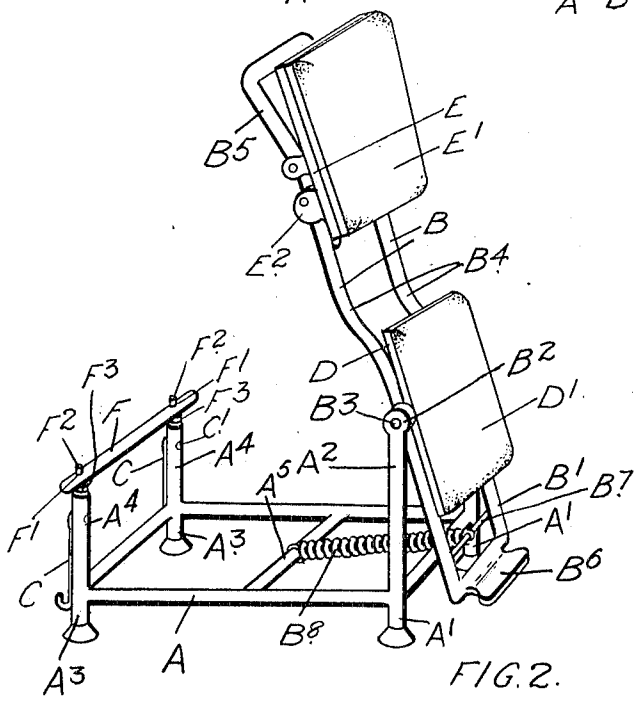

FIG. 2.

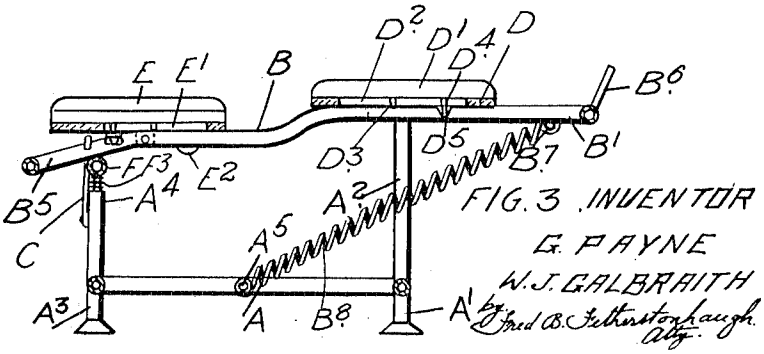

FIG. 3.

WITNESSES

Wm. L. Jordan.

M. Egan

INVENTOR

G. PAYNE

W. J. GALBRAITH

by Fred B. Fetherston & Haugh.

Atty.

UNITED STATES PATENT OFFICE.

GEORGE PAYNE AND WILLIAM JOHN GALBRAITH, OF ORILLIA, ONTARIO, CANADA.

OPERATING ADJUSTABLE TABLE.

1,082,043. Specification of Letters Patent. Patented Dec. 23, 1913.

Application filed January 20, 1913. Serial No. 743,122.

To all whom it may concern:

Be it known that we, GEORGE PAYNE and WILLIAM JOHN GALBRAITH, both of the town of Orillia, in the county of Simcoe, in the Province of Ontario, Canada, have invented certain new and useful Improvements in Operating Adjustable Tables, of which the following is the specification.

Our invention relates to improvements in operating adjustable tables and the object of the invention is to devise a table on which a heavy patient may be readily placed in a recumbent position ready for treatment and it consists essentially of a main supporting stand, a table top pivoted intermediately of its length at the top and at one end of the stand, a tension spring connected at one end of the table to the bottom of the stand, adjustable pads supported by the table top and means for adjusting the pads as hereinafter more particularly explained by the following specification.

Figure 1, is a general perspective view of our table in position for use. Fig. 2 is a similar view to Fig. 1 showing the table in the position it would assume ready to receive the patient. Fig. 3, is a longitudinal section through Fig. 1.

In the drawings like letters of reference indicate corresponding parts in each figure.

A is a frame or stand provided with the legs A′ which extend upwardly to form standards A^2 and legs A^3 which extend upwardly to form rests A^4.

A^5 is a cross bar extending across the stand A.

B is the table top comprising a substantially rectangular frame B′ pivoted at B^2 on pins B^3 extending into the standards A^2. The frame B′ is provided with a downwardly curved portion B^4 terminating in an inclined portion B^5 for a purpose which will hereinafter appear.

B^6 is a step extending from the frame B′ at one end thereof.

B^7 is a cross bar extending across the frame B′ in proximity to the step B^6.

B^8 is a tension spring secured at one end to the bar B^7 and at the opposite end to the bar A^5.

C are swing hooks pivoted on pin C′ extending through the standards A^4. The hooks C are designed to extend over the side bar of the frame B′ to hold it in a horizontal position.

D is a board secured on the frame B′ in proximity to the step B^6.

D′ is a pad.

D^2 is a longitudinal slot formed in the board D.

D^3 is a pin extending downwardly from the pad in to the slot D^2.

D^4 is a bolt extending downwardly from the pad through the slot D^2 and on which is threaded a wing nut D^5. By loosening the nut D^5 the pad D′ may be moved longitudinally on the board D and adjusted to the position required.

E is a board pivoted at the opposite end of the frame B at the angle formed between the portion B^4 and the portion B^5.

E′ is a pad adjustably secured to the board E in a similar way to the pad D′ in connection with the board D.

E^2 is an eccentric lever pivoted on the side bar of the frame B beneath one end of the board E. By turning the lever E^3 down the board E and pad E′ may be tilted to the required angle, the inclined portion B^5 of the frame B allowing of its adjustment.

F is a cross bar provided with holes F′ in proximity to each end thereof.

F^2 are studs extending vertically upwardly from the standards A^4 through the holes F′.

F^3 are cushion springs surrounding the studs F^2 between the cross bar F and the top of each standard A^4.

When the table B is in the horizontal position shown in Fig. 1 the end of the table supporting the pad E′ rests upon the cross bar F being secured in this position by hooks C as hereinbefore described.

Having described the principal parts involved in our invention we will briefly describe its operation.

When it is desired to place a patient on the table such table is placed in the position shown in Fig. 2. The patient steps upon the step B^6 and leans against the pads D′ and E′, the pad E′ being designed to support the chest of the patient and the pad D′ the legs of the patient in proximity to the knees. It will also be noticed that the pad E′ is on a slightly lower level than the pad D′ so that the patient will lie perfectly horizontally. It will be noticed that the table B is pivoted intermediately of its length nearer to the step end of the table than to

the opposite end. It will, therefore, be seen that when the patient leans against the pad E′ that the tendency will be for the table to swing downwardly at that end against the tension of the spring B^8. It will then be very easy for the operator by taking hold of the end B^5 of the table to swing the table downwardly into the horizontal position no matter what weight the patient may be. It will, of course, be understood that this table is adapted for the handling of very heavy patients which are necessarily very difficult to place in a recumbent position by the attendants. When the operation is completed the hook C^5 may be moved and the table may be swung upwardly again toward the vertical position.

Where consumptive patients or patients having hollow chests require treatment it is necessary to swing the pad E′ at its lower end to the required angle to fit the chest. This is done by swinging the lever E^3 downwardly.

From this description it will be seen that we have devised a very simple device for handling heavy patients whereby they may be placed in a recumbent position for treatment.

What we claim as our invention is:

1. An operating table comprising a main support, a table top pivoted to the main support at one side of its longitudinal center and adapted to be swung from horizontal to approximately vertical position, resilient means connecting said table to said support for counterbalancing the weight of said table when swung from vertical to horizontal position, and a resilient support carried by the main support for supporting the free end of the table when in its horizontal position.

2. In an operating adjustable table, the combination with the main supporting frame, of a table pivoted intermediately of its length in the main support and designed when swung up at one end to extend at the opposite end in proximity to the floor and to be supported by the frame when swung downwardly in to its horizontal position, a resilient support carried by the main support for supporting the free end of the table when in its horizontal position, as and for the purpose specified.

3. In an operating adjustable table, the combination with the main supporting frame, of a table pivoted intermediately of its length in the main support, and designed when swung up at one end to extend at the opposite end in proximity to the floor and to be supported by the frame when swung downwardly in to its horizontal position, compression springs carried by the main frame, and a cross bar carried by the compression springs and extending beneath the free end of the table when in its horizontal position, as and for the purpose specified.

GEO. PAYNE.
WM. JOHN GALBRAITH.

Witnesses:
ELSIE R. MOFFIT,
LOUISE V. BRIGGS.

Copies of this patent may be obtained for five cents each, by addressing the "Commissioner of Patents, Washington, D. C."