(12) INTERNATIONAL APPLICATION PUBLISHED UNDER THE PATENT COOPERATION TREATY (PCT)

(19) World Intellectual Property Organization
International Bureau

(43) International Publication Date
29 December 2011 (29.12.2011)

PCT

(10) International Publication Number
WO 2011/161532 A1

(51) International Patent Classification:
B01F 15/00 (2006.01) *B01F 9/00* (2006.01)
B01F 13/10 (2006.01) *B01F 11/00* (2006.01)

(21) International Application Number:
PCT/IB2011/001453

(22) International Filing Date:
23 June 2011 (23.06.2011)

(25) Filing Language: Italian

(26) Publication Language: English

(30) Priority Data:
UD2010A000126 24 June 2010 (24.06.2010) IT

(71) Applicant *(for all designated States except US)*: **CPS COLOR EQUIPMENT SPA CON UNICO SOCIO** [IT/IT]; Via dell'Agricoltura, 103, I-41038 San Felice sul Panaro (IT).

(72) Inventor; and

(75) Inventor/Applicant *(for US only)*: **BERTOLI, Mirko** [IT/IT]; Via J. F. Kennedy, 7, I-41036 Medolla (IT).

(74) Agents: **PETRAZ, Gilberto** et al.; GLP SRL, Piazzale Cavedalis, 6/2, I-33100 Udine (IT).

(81) Designated States *(unless otherwise indicated, for every kind of national protection available)*: AE, AG, AL, AM, AO, AT, AU, AZ, BA, BB, BG, BH, BR, BW, BY, BZ, CA, CH, CL, CN, CO, CR, CU, CZ, DE, DK, DM, DO, DZ, EC, EE, EG, ES, FI, GB, GD, GE, GH, GM, GT, HN, HR, HU, ID, IL, IN, IS, JP, KE, KG, KM, KN, KP, KR, KZ, LA, LC, LK, LR, LS, LT, LU, LY, MA, MD, ME, MG, MK, MN, MW, MX, MY, MZ, NA, NG, NI, NO, NZ, OM, PE, PG, PH, PL, PT, RO, RS, RU, SC, SD, SE, SG, SK, SL, SM, ST, SV, SY, TH, TJ, TM, TN, TR, TT, TZ, UA, UG, US, UZ, VC, VN, ZA, ZM, ZW.

(84) Designated States *(unless otherwise indicated, for every kind of regional protection available)*: ARIPO (BW, GH, GM, KE, LR, LS, MW, MZ, NA, SD, SL, SZ, TZ, UG, ZM, ZW), Eurasian (AM, AZ, BY, KG, KZ, MD, RU, TJ, TM), European (AL, AT, BE, BG, CH, CY, CZ, DE, DK, EE, ES, FI, FR, GB, GR, HR, HU, IE, IS, IT, LT, LU, LV, MC, MK, MT, NL, NO, PL, PT, RO, RS, SE, SI, SK, SM, TR), OAPI (BF, BJ, CF, CG, CI, CM, GA, GN, GQ, GW, ML, MR, NE, SN, TD, TG).

Published:

— *with international search report (Art. 21(3))*

— *before the expiration of the time limit for amending the claims and to be republished in the event of receipt of amendments (Rule 48.2(h))*

(54) Title: MACHINE FOR THE AUTOMATIC PREPARATION AND DISTRIBUTION OF FLUID COLORING PRODUCTS CONTAINED IN CLOSED RECIPIENTS

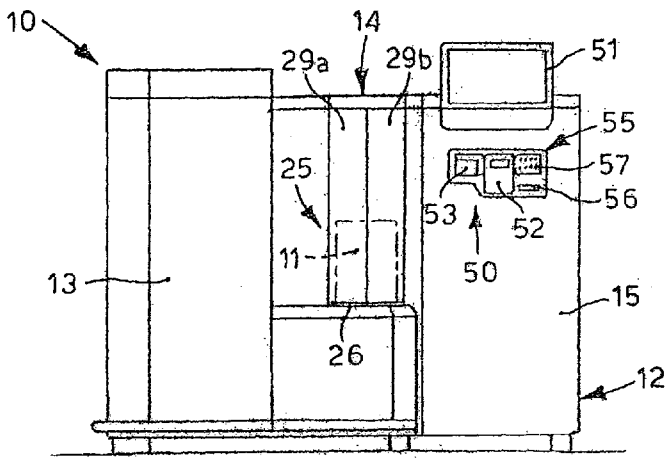

fig. 1

(57) Abstract: A machine (10) for the automatic preparation and distribution of at least a fluid coloring product contained in a receptacle (11) containing a paint base, comprises, integrated with each other, data input means (50) able to be actuated by the user in order to choose the sizes and capacity of the receptacle (11), the type of paint base and/or the color of the fluid coloring product to be obtained; a delivery device (21) suitable to deliver coloring substances inside the receptacle (1 1), according to the data input by the user by means of the data input means (50); a mixing device (22), suitable to stir the receptacle (1 1) in order to mix the paint base with the coloring substances; transfer means (30) suitable to transfer the receptacle (1 1) from a loading station (25) to the delivery device (21) and from the latter to the mixing device (22) and vice versa; and a central control unit (59) associated with the data input means (50) and suitable to selectively control and drive both the delivery device (21) and the mixing device (22) and also the transfer means (30).

WO 2011/161532 A1

"MACHINE FOR THE AUTOMATIC PREPARATION AND DISTRIBUTION OF FLUID COLORING PRODUCTS CONTAINED IN CLOSED RECIPIENTS"

* * * * *

FIELD OF THE INVENTION

The present invention concerns a machine for the automatic preparation and distribution of fluid coloring products, for example coloring liquids, bases for paints, varnishes, enamels, inks or other fluid coloring substances, each contained in a closed receptacle, such as for example any container whatsoever, of any shape and size, provided with a lid. The machine according to the present invention allows the user to select both the container, and the paint base, the color, the shade to be obtained, and is able to automatically deliver and mix the coloring pigments, in order to obtain the selected coloring product and make it available for the final user, ready for use.

BACKGROUND OF THE INVENTION

Machines are known for dispensing or delivering coloring products, able to introduce a dosed quantity of coloring pigments into a receptacle containing a paint base, in order to obtain a desired coloring product.

Mixing machines are also known, different from dispensing machines, able to mix the coloring product obtained with the latter, to mix and homogenize the coloring pigments and the paint base.

In the current state of the art, however, there is the disadvantage that, in order to obtain a fluid coloring product, starting from a paint base, it is necessary to have available two different machines, that is, a dispensing machine, which makes up the composition of the coloring product, inserting the coloring pigments in the paint base, and a mixing machine, which mixes the coloring product after it has been made up by the dispensing machine.

Another disadvantage is that each of the known machines, in order to operate correctly, requires the presence and intervention of a specific professional operator, who manipulates the individual receptacles, also moving them from one machine to the other, and who sets each machine, the dispensing or mixing machine, according to the fluid coloring product to be obtained. This has a negative effect on the time needed to obtain the desired coloring product and

considerably increases the overall costs.

US-A-2008/0051936 describes a machine for preparing and dispensing fluid coloring products contained in closed receptacles, which comprises, aligned along a single horizontal axis, a device to identify and mix the receptacle introduced inside the machine through a lateral door; a device for closing the receptacle associated with a labeling station; a device for holing the lid of the receptacle; a device for delivering and dosing the coloring substances; a punching device. A rectilinear conveyor device is able to transport the receptacle from one to the other of the devices listed above, in both directions, but along a single horizontal direction, and therefore this known machine, developing totally in length, is very bulky and the different operations are very complex, so that the preparation of the fluid coloring product is very slow.

EP-A-2025393 describes an apparatus for dosing colored pigments in a container for paint or neutral enamel and for mixing the mixture obtained, in which the individual container is first disposed in a delivery device, through an introduction door, and then the colored pigments are delivered into the container. Then the container is first lowered with a vertical movement and then moved laterally with a horizontal movement toward a mixing device. When mixing is complete, the container is removed from the apparatus through a removal door, different from the introduction door. This known apparatus is too complex and complicated as well, especially because it requires to move the container first vertically and then horizontally, and because it provides two access doors, the introduction door and the removal door.

Purpose of the present invention is to achieve a machine for the automatic preparation and distribution of a fluid coloring product contained in a closed receptacle which is simple, compact and reliable and which is able to prepare the coloring product automatically and make it available for the user, according to the choices made by the latter directly and without needing to have a specific operator to manipulate the receptacle and command the machine.

The Applicant has devised, tested and embodied the present invention to overcome the shortcomings of the state of the art and to obtain these and other purposes and advantages.

SUMMARY OF THE INVENTION

The present invention is set forth and characterized in the independent claims, while the dependent claims describe other characteristics of the invention or variants to the main inventive idea.

In accordance with the above purpose, the machine according to the present invention for the automatic preparation and distribution of at least a fluid coloring product contained in a closed receptacle containing a paint base, comprises, integrated with each other, data input means, a loading station into which the user himself can position the selected receptacle, a device for delivering coloring substances, a mixing device, means to transfer the selected receptacle from the loading station to the delivery device and from this to the mixing device and vice versa, and a central control unit.

The data input means can be actuated directly by the user to choose one or more of the following characteristics: the sizes and capacity of the receptacle, the type of the paint base, that is, whether it is for example paint for wood or for metals, for interiors or exteriors, and the color and shade of the fluid coloring product to be obtained.

The delivery device is able to deliver inside the receptacle certain coloring substances, contained in suitable tanks disposed inside the machine itself, according to the data input by the user using the data input means.

The mixing device is able to stir the receptacle, to mix the paint base with the coloring substances.

The transfer means are able to transfer the receptacle from the loading station to the delivery device and vice versa, along a first horizontal axis, and from the delivery device to the mixing device and vice versa, along a second horizontal axis which is substantially coplanar and substantially perpendicular to the first horizontal axis.

The central control unit is associated with the data input means and is able to control and drive selectively and in a programmed manner both the delivery device and the mixing device and the transfer means, in order to cause, in sequence: the movement of the receptacle from the loading station to the delivery device along the first horizontal axis; the delivery of the coloring substances inside the receptacle by actuating the delivery device; the movement of the receptacle from the delivery device to the mixing device along the second

horizontal axis; the stirring of the receptacle so as to mix the paint base with the coloring substances by means of the mixing device; the movement of the receptacle from the mixing device to the delivery device along the second horizontal axis; and the movement of the receptacle from the delivery device to the loading station along the first horizontal axis.

In this way, the transfer means are able to return the receptacle to the loading station when mixing is completed,so that the user can take the receptacle containing the finished coloring product ready for use.

According to a secondary characteristic of the present invention, the data input means could comprise an interactive screen, by means of which the user can make his choices concerning the type of container and final product desired, and a printer able to print a label carrying at least a code, for example a bar code, with the characteristics chosen by the user. The label or alternative support, such as an RFID tag, is able to then be introduced into, or associated from the outside with, the machine by the user himself, so that the relative code is automatically recognized by the central control unit in order to carry out the delivery cycle of the coloring substances by means of the delivery device, and the subsequent mixing, by means of the mixing device, and also to move the receptacle from one to the other of the two devices.

According to another secondary characteristic of the present invention, the transfer means comprise a slider which is mobile by means of a first linear actuator between the loading station and the delivery device and vice versa. A centering member is mounted on the slider, able to center the receptacle with respect to the delivery device. The transfer means also comprise a second linear actuator able to move the receptacle, advantageously together with the centering member, between the delivery device and the mixing device and vice versa.

According to another secondary characteristic of the present invention, at least first safety means are interposed between the delivery device and the mixing device, to prevent the receptacle and/or the coloring product contained therein from randomly or accidentally coming out of the mixing device while the latter is functioning, and from damaging the delivery device or other parts of the machine. In some forms of embodiment, the first safety means are configured to physically separate the working environment of the delivery device from that of

the mixing device.

According to another secondary characteristic of the present invention, at least second safety means are provided in the loading station, to prevent the user from accessing inside the machine, beyond the loading station itself, or to the loading station during the operating cycle, including the step of delivering the coloring substances and the mixing step.

According to another secondary characteristic of the present invention, the machine also comprises a verification device, which provides to verify that the receptacle has been correctly positioned by the user on the centering member, before transferring it to the delivery device.

According to another secondary characteristic of the present invention, the machine is provided with an anti-drying device, which prevents the tips of the delivery device needles which deliver the coloring substances from drying out when the machine is inactive.

BRIEF DESCRIPTION OF THE DRAWINGS

These and other characteristics of the present invention will become apparent from the following description of a preferential form of embodiment, given as a non-restrictive example with reference to the attached drawings wherein:

- fig. 1 is a schematic view of a machine according to the present invention for the automatic distribution of fluid coloring products contained in receptacles;
- fig. 2 is a schematic view from above of the machine in fig. 1;
- fig. 3 is a front enlarged view of a first detail of the machine in fig. 1;
- fig. 4 is a schematic view of a label printed by the machine in fig. 1;
- fig. 5 is a perspective view of a shelf on which the receptacles used by the machine in fig. 1 are stored;
- fig. 6 is a second detail, enlarged and sectioned, of the machine in fig. 1;
- fig. 7 is a plane view, partial, enlarged and partly sectioned, of the machine in fig. 1;
- fig. 8 is a right side view, enlarged and partly sectioned, of the machine in fig. 1 in a first operating condition;
- fig. 9 is a right side view, similar to the one in fig. 8, of the machine in fig. 1 in a second operating condition;
- fig. 10is a rear view, enlarged and partly sectioned, of the machine in fig. 1 in

the second operating condition shown in fig. 9;

- fig. 11is a rear view, similar to the one in fig. 10, of the machine in fig. 1 in a third operating condition.

To facilitate comprehension, the same reference numbers have been used, where possible, to identify identical common elements in the drawings. It is understood that elements and characteristics of one form of embodiment can conveniently be incorporated into other forms of embodiment without further clarifications.

DETAILED DESCRIPTION OF A PREFERENTIAL FORM OF EMBODIMENT

With reference to fig. 1, a machine 10 according to the present invention for the automatic preparation and distribution of fluid coloring products, contained in closed receptacles 11, comprises a support structure 12, substantially divided into three modular compartments 13, 14 and 15, adjacent and integrated with each other.

The receptacles 11 (fig. 5) can be either metal, such as steel, or plastic material and can be a cylindrical shape or any other shape, such as for example a parallelepiped, with a square or rectangular base. Each of them contains a fluid paint base, which can be for example transparent or white, to which a colorant is then added, substantially consisting of pigments. Each receptacle 11 is closed by a lid provided at the center with a membrane, of a known type, which has the characteristic of being holed by one or more needles and closing automatically when each needle is removed.

In the first compartment 13, which is the one on the extreme left in figs. 1 and 2, a plurality of tanks 20 are disposed (fig. 2), which can be of any known type, for example as described in the European patent EP-B-1.744.826, granted on 17.10.2007 to the present Applicant, in each of which a different coloring substance is contained.

In the second compartment 14, that is, the central one, a delivery device 21 is disposed, which can be of any known type, for example as described in the Italian patent IT-B-1.370.076, granted on 26.01.2010 to the present Applicant. The delivery device 21 is connected to the tanks 20 by means of pipes 23 (fig. 8) of any known type.

In the third compartment 15 (fig. 2) a mixing device 22 is disposed, which can be of any known type, for example as described in the European patent EP-B-1.417.024, granted on 21.09.2005 to the present Applicant.

Advantageously, to prevent the vibrations produced by the mixing device 22 from spreading to the other two compartments 13 and 14, a plurality of anti-vibration elements 39, consisting for example of dampers, are interposed between the compartments 13, 14 and 15.

In the front part or front-piece of the central compartment 14 a loading station 25 is disposed (fig. 2 and 7), which comprises a plate 26, for example circular in shape, which functions as a support element and as a centering member for one receptacle 11 at a time. The loading station 25 has a first vertical axis Z1 (figs. 6 to 9).

The upper part of the plate 26 (figs. 6 and 7) is provided with a plurality of seatings 27 with steps decreasing from the periphery toward the center and having a circular or rectangular design, with the sizes of the bases of the different receptacles 11 that the machine 10 can process. In some forms of embodiment, not restrictive of the scope of the present invention, the seatings 27 are in this case seven in number. To optimize space, in some cases, as can be seen in fig. 7, two different seatings, one circular and one rectangular, intersect on the same horizontal plane.

Around the plate 26 and coaxial with the axis Z1, an access door 29 is disposed, semi-circular in shape and comprising in some forms of embodiment two panels 29a and 29b, each of which has an angular development of 90°. The access door 29 is selectively mobile between an open position, shown in figs. 2 and 7, and a closed position, shown by dashes again in figs. 2 and 7. In this way the access door 29 defines a bushing rotating around the vertical axis Z1, the movement of which between the two positions can be effected either manually by the user himself, or automatically by means of an electric motor of a known type and not shown in the drawings. The access door 29, in both its positions, open and closed, prevents the user from introducing his hands or other inside the machine 10, beyond the loading station 25, and hence constitutes an effective safety mean.

Transfer means 30 (figs. 2 and from 6 to 11), which comprise a slider 31 and

will be described in more detail hereafter, are able to transfer the receptacle 11 selectively and automatically, together with the plate 26, both from the loading station 25 to the delivery device 21, along a first horizontal axis X, and from the delivery device 21 to the mixing device 22 (without the slider 31), along a second horizontal axis Y, perpendicular to the axis X, and vice versa, in order to return them to the loading station 25.

On the front part of the right-hand compartment 15 (fig. 1) data input means 50 are disposed, which in this case comprise an interactive screen 51, of the touch screen type, a label printer 52, an electronic code reader 53, for example bar codes or RFID tags, and a possible device for electronic payment 56, which in turn comprises an electronic reader of electronic payment cards 55, such as for example ATM cards, credit cards or pre-paid cards, and a numerical keyboard 57. Each of the data input means 50 is easily used by any user, to make his choices of the type of fluid coloring product he wants to obtain from the machine 10, as will be described in more detail hereafter.

The data input means 50 are connected to a central control unit 59 (fig. 2), which is configured and programmed to selectively control and command the delivery device 21, the mixing device 22 and the transfer means 30.

The loading station 25 also comprises a verification device 60 (fig. 6) to verify the receptacle 11 positioned by the user on the plate 26, and the correct positioning of the receptacle 11 on the corresponding seating 27.

In particular, the verification device 60 comprises a dimensional reading system, in this case comprising two position sensors 61 and 62, disposed in fixed positions on diametrically opposite sides with respect to the vertical axis Z1, just above the plate 26, and an electronic reader 63 of bar codes or RFID tags, disposed in a fixed position above the sensor 62. The position sensors 61 and 62 and the electronic reader 63 of bar codes or RFID tags are connected to the central control unit 59.

The verification device 60 also comprises an idle transmission member temporarily connected to a drive member. In some forms of embodiment, the idle transmission member comprises a toothed wheel 65, attached coaxially to the lower part of the plate 26 and engaged temporarily with a toothed pinion 66 which acts as a drive member, in turn keyed onto the shaft of an electric motor

67, attached to the structure 12 of the machine 10 and commanded by the central control unit 59. Two discs 68 and 69, of different diameter, also coaxial with the plate 26, are attached to the lower part of the toothed wheel 65 and are divided by a circular groove 70. The discs 68 and 69 rest on the slider 31 so that they can rotate with respect thereto, around the vertical axis Z1. In particular, the disc 69, with a smaller diameter than disc 68, is inserted in a horizontal groove 71 of the slider 31, shaped like an upside-down T, parallel to the horizontal axis Y and open on one side (the right side in fig. 6, which is the left side in figs. 10 and 11). The functioning of the verification device 60 is described hereafter.

The transfer means 30 (figs. 6 to 11) as well as the slider 31, also comprise a horizontal bar 32, attached to the structure 12 of the machine 10 parallel to the axis X. The slider 31 is able to slide linearly with respect to the horizontal bar 32 (figs. 8 and 9), between the loading station 25 (first vertical axis Z1), and the delivery device 21 (second vertical axis Z2), and vice versa, by means of two pairs of rollers 33, and is commanded by a first linear actuator 34, which in this case comprises a transmission belt 35 connected to an electric motor 36 mounted on the fixed structure 12 and in turn commanded by the central control unit 59.

A second linear actuator 38 is provided to selectively transfer the plate 26 (figs. 10 and 11), together with the receptacle 11, from the delivery device 21 (second vertical axis Z2), to the mixing device 22 (third vertical axis Z3), and vice versa, leaving the slider 31 in correspondence with the delivery device 21 (second vertical axis Z2). The second linear actuator 38, in this case electric, has at one end 40 a stop element or mechanical reference, in this case a cylindrical head 41, able to rotate by 90° in order to move from a horizontal position (fig. 8), in which it is inactive, to a vertical position (figs. 9, 10 and 11), in which it is actively inserted in a corresponding radial hollow 42, made in the disc 68 attached to the plate 26. The rotation by 90° of the linear actuator 38, and therefore of the cylindrical head 41, is effected by another actuator, for example an electric motor 43, in this case attached to the structure 12. Both the linear actuator 38 and the electric motor 43 are commanded by the central control unit 59.

The transfer means 30 also comprise a fixed guide, having a horizontal groove 45 open on both sides and a cross section identical to that of the horizontal

groove 71 of the slider 31. The horizontal groove 45 is parallel to the horizontal axis Y (figs. 7, 10 and 11).

Another guide 46 (figs. 10 and 11) is attached on a lower plate 81 of the mixing device 22. The guide 46 is provided with a horizontal groove 47 with a cross section identical to that of the grooves 45 and 71, it is open on one side only, that is, the one on the right in figs. 10 and 11, and is parallel to the horizontal axis Y.

The delivery device 21 (figs. 8 to 10) comprises a plate 73 on which a plurality of needles 74 are mounted, disposed parallel and concentric to the vertical axis Z2 and each connected to a corresponding pipe 23. The plate 73 is mobile vertically along the vertical axis Z2 by means of an electric motor, of a known type and not shown in the drawings, also controlled by the central control unit 59.

To prevent the tips of the needles 74 from drying out, when the machine 10 is inactive, an anti-drying device 75 is provided, which comprises a mechanical arm 76, pivoted on a vertical pin 77 and having at one end a support plate 78, heat-regulated, for example thanks to an electric resistance integrated therewith, on which a container or can 79 is removably disposed, similar to one of the closed receptacles 11 and containing a liquid substance, for example water and/or steam. The mechanical arm 76 is rotatable, by means of an electric motor 80, controlled by the central control unit 59, between a first operating position in which it is aligned with the horizontal axis Y (figs. 7 and 8), and a second operating position rotated by 90° with respect to the first, that is, parallel to the horizontal axis X (figs. 9 to 11 and shown by dashes in fig. 7). In the first operating position (figs. 7 and 8), the container 79 is coaxial with the second vertical axis Z2 and the plate 73 is lowered against the can 79 (fig. 8) so that the tips of the needles 74 are inside the latter, remaining wet thanks to the liquid and/or steam contained therein. In the second operating position (figs. 7 and from 9 to 11), the container 79 is coaxial with a fourth vertical axis Z4, outside the bulk of the plate 26 and plate 73.

The mixing device 22 (figs. 10 and 11), as well as the lower plate 81, also comprise an upper clamping plate 82, which is able to selectively clamp the receptacle 11 in a known manner with a determinate clamping force. The upper clamping plate 82 is commanded by an electric motor of a known type and not

shown in the drawings, also controlled by the central control unit 59. The two plates 81 and 82 are part of a mobile frame 83, which is elastically supported with respect to a fixed frame 84, and can be made to oscillate or rotate with respect to the latter, by means of known means not shown in the drawings.

Between the delivery device 21 and the mixing device 22, in correspondence with the fixed guide 44 (figs. 7, 10 and 11), a wall 85 is disposed, advantageously metal, which is mobile vertically on lateral guides 86, between a lowered position (fig. 11) and a raised position (fig. 10), and vice versa, by means of an electric motor 87, attached to the structure 12 and connected to a toothed pinion 88, engaging constantly with a rack 89, attached to a lateral side of the metal wall 85. The electric motor 87 is also controlled by the central control unit 59.

The mobile wall 85 is normally closed, and is raised only to make the receptacle 11 enter into the mixing device 22, or make it exit therefrom. It therefore prevents the receptacle 11 from exiting from the mixing device 22 during the mixing step and from damaging the delivery device 21 or other parts of the machine 10, and therefore constitutes another effective safety mean.

The method which the machine 10 as described heretofore uses is as follows.

First of all, there is a step in which the user, by means of the data input means 50, chooses and selects the characteristics of the specific fluid product that he intends to purchase. In particular, the interactive screen 51, for example divided into three parts (fig. 3), has the possibility of choosing, by means of four buttons top left, one of the four paint bases, that is, type A (paint for interiors), type B (paint for exteriors), type C (paint for wood), or type D (paint for metals). By means of another four buttons, positioned top right, the user can choose the size or capacity of the receptacle 11 (for example 0.5 liters, 1.0 liters, 2.5 liters or 5.0 liters). Finally, he can choose the type and shade of the color desired, using one of the buttons, each one colored a different shade, located in the lower half of the interactive screen 51.

In some forms of embodiment of the present invention, in order to increase the productivity of the machine and to prevent it from remaining occupied by a single user for too long a time, the whole step of choosing and deciding could be moved to a choice station, such as a booth, or a series of interactive booths, situated near and communicating with the machine itself.

When the user has completed this step of choosing the fluid coloring product, the machine 10 automatically carries out a printing step, during which the label printer 52 (fig. 1) issues an adhesive label, which has on it the characteristics chosen by the user, in a manner legible for the user (fig. 4), for example: color red; color code 2-15-3; type A, capacity of the receptacle 2.5. The label also has a corresponding bar code and, on the right, a colored rectangle with the shade of color chosen.

The user is then invited to pick up, for example from a shelf (fig. 5) divided into four compartments (A, B, C and D), the type of receptacle 11 that contains the paint base (A, B, C and D) and that has the capacity he has chosen, and to position it in the loading station 25 (fig. 2), centering it on the corresponding seating 27 (fig. 6) of the plate 26. Each receptacle 11, on a peripheral surface, has impressed a corresponding bar code, identifying its characteristics and content, or an RFID tag.

The user is also invited to insert into the electronic reader 53 of bar codes or RFID tags (fig. 1) the label previously printed by the label printer 52.

Optionally, the user can pay for the purchase of the fluid coloring product chosen using the electronic payment device 55.

The access door 29 (figs. 2 and 7) is closed (manually by the user, or automatically by a suitable button, not shown in the drawings), so that the two panels 29a and 29b are disposed in front of the receptacle 11 (position shown by dashes in figs. 2 and 7) and so that no-one can access the loading station 25 until the operating cycle is concluded.

The central control unit 59 then automatically carries out a verification step, by means of the verification device 60 (fig. 6), in order to verify that the container 11 is the type chosen by the user, by means of the electronic reader 63 of bar codes or RFID tags, and also that it is centered in the corresponding seating 27, by means of the position sensors 61 and 62. In order to do this, the plate 26 is made to rotate by one complete revolution around the vertical axis Z1 by the electric motor 67, by means of the toothed pinion 66 and the toothed wheel 65.

If the verification device 60 detects the presence of an error in the type of receptacle 11 introduced into the loading station 25 and/or in its centering, the

user is invited to correct it.

On the contrary, if the verification step gives a positive result, the central control unit 59 automatically carries out a step of preparing the delivery device 21, lifting first the plate 73 (fig. 9) and then rotating the mechanical arm 76 by 90° in a clockwise direction (fig. 7), by means of the electric motor 80, until it takes it, together with the container 79, to the second operating position, aligned with the vertical axis Z4.

Afterward, a step of delivering the coloring substances into the receptacle 11 is carried out, under the control of the central control unit 59. In some forms of embodiment, the plate 26 is clamped in the dispensing position by the cylindrical head 41 solid with the linear actuator 38. In particular, in order to keep the plate 26 stationary (fig. 9), the electric motor 43 is commanded, which takes the cylindrical head 41 inside the radial hollow 42 of the disc 68, by rotating it by 90° in an anti-clockwise direction. Then the plate 73 of the delivery device 21 is lowered until the needles 74 enter with their tips inside the receptacle 11 (position shown by dashes in fig. 9). The pipes 23 then convey into the receptacle 11, using volumetric pumps of a known type and not shown in the drawings, the necessary quantity of coloring substances contained in the tanks 20, so as to obtain the shade of color chosen by the user. When delivery is complete, the plate 73 is raised.

The central control unit 59 then carries out automatically a second step of transferring the receptacle 11 (figs. 10 and 11) from the delivery device 21 (vertical axis Z2) to the mixing device 22 (vertical axis Z3). In order to do this, first the mobile wall 85 is raised (fig. 10), by means of the electric motor 87, the toothed pinion 88 and the rack 89, and then the linear actuator 38 is commanded, which moves the plate 26 linearly, with the disc 69 guided in sequence into the three horizontal grooves 71, 45 and 47, aligned with each other parallel to the horizontal axis Y, until it is taken into correspondence with the vertical axis Z3.

The central control unit 59 then commands the electric motor 43 to return the cylindrical head 41, in this case rotating it by 90° in a clockwise direction (fig. 9), outside the radial hollow 42 of the disc 68, and then the linear actuator 38, to return the cylindrical head 41 back again. Subsequently, the mobile wall 85 is again lowered, commanding the corresponding electric motor 87.

The central control unit 59 then carries out a step of mixing the product contained inside the receptacle 11 (paint base plus coloring substances), commanding the mixing device 22 in a known manner, which stirs the receptacle 11 for a predetermined time.

When the mixing step is finished, the central control unit 59 commands the inverse operations, until the receptacle 11 is returned to the loading station 25. In particular, the mobile wall 85 is raised again; the cylindrical head 41 is returned to engage in the radial hollow 42 of the disc 68; the linear actuator 38 returns the plate 26 on the slider 31, which in the meantime had remained aligned under the delivery device 21 (vertical axis Z2); the mobile wall 85 is lowered again; the electric motor 36 and the belt 35 return the slider 31, together with the plate 26, to the initial position (vertical axis Z1); the electric motor 80 returns the container 79 to the first operating position, aligned with the vertical axis Z2; the plate 73 of the delivery device 21 is lowered to return the tips of the needles 74 inside the container 79 and thus prevent the possible residual coloring pigments from drying.

It is then possible to return the panels 29a and 29b (manually or automatically) to their initial condition (figs. 2 and 7), behind the plate 26. At this point a message appears on the interactive screen 51 inviting the user to take the receptacle 11 containing inside it the fluid coloring product he has requested.

It is thus clear that all the steps of the operating cycle have been managed automatically by the machine 10, with the intervention of the user alone, without needing a specialized operator to be present.

It is clear that modifications and/or additions of parts may be made to the machine 10 and relative method as described heretofore, without departing from the field and scope of the present invention.

For example, instead of having a rotation of 90° of the cylindrical head 41 of the linear actuator 38 to engage the plate 26, it is possible to have a linear translation actuated by an electromagnet.

It is also clear that, although the present invention has been described with reference to some specific examples, a person of skill in the art shall certainly be able to achieve many other equivalent forms of machine for the automatic distribution of fluid coloring products contained in closed receptacles, and

relative method, having the characteristics as set forth in the claims and hence all coming within the field of protection defined thereby.

CLAIMS

1. Machine for the automatic preparation and distribution of at least a fluid coloring product contained in a receptacle (11) containing a paint base, comprising, integrated with each other: data input means (50) able to be actuated by the user in order to choose the sizes and capacity of said receptacle (11), the type of said paint base and/or the color of said fluid coloring product to be obtained; a loading station (25) into which the user himself can position said receptacle (11) selected; a delivery device (21) suitable to deliver coloring substances inside said receptacle (11), according to the data input by the user by means of said data input means (50); a mixing device (22), suitable to stir said receptacle (11) in order to mix said paint base with said coloring substances; **characterized in that** it also comprises transfer means (30) suitable to transfer said receptacle (11) from said loading station (25) to said delivery device (21) and vice versa along a first horizontal axis (X), and from said delivery device (21) to said mixing device (22) and vice versa along a second horizontal axis (Y) which is substantially coplanar and substantially perpendicular to said first horizontal axis (X), and a central control unit (59) associated with said data input means (50) and suitable to control and drive, selectively and in a programmed manner, both said delivery device (21) and said mixing device (22) and also said transfer means (30), in order to cause, in sequence, the movement of said receptacle (11) from said loading station (25) to said delivery device (21) along said first horizontal axis (X), the delivery of said coloring substances inside said receptacle (11) by actuating said delivery device (21), the movement of said receptacle (11) from said delivery device (21) to said mixing device (22) along said second horizontal axis (Y), the stirring of said receptacle (11) so as to mix said paint base with said coloring substances by means of said mixing device (22), the movement of said receptacle (11) from said mixing device (22) to said delivery device (21) along said second horizontal axis (Y), and the movement of said receptacle (11) from said delivery device (21) to said loading station (25) along said first horizontal axis (X).

2. Machine as in claim 1, **characterized in that** said data input means (50) comprise an interactive screen (51), by means of which the user is able to make his own choices concerning the type of said receptacle (11) and the final product

desired.

3. Machine as in claim 1 or 2, **characterized in that** said data input means (50) comprise a printer (52) able to print a label bearing at least an identification code of the choices made by the user.

4. Machine as in claim 3, **characterized in that** said data input means (50) also comprise an electronic reader (53) able to read said code and to activate said central control unit (59) in order to execute the delivery cycle of the coloring substances, by means of said delivery device (21), and the subsequent mixing by means of said mixing device (22), as well as to move said receptacle (11) from one to the other of said two devices (21, 22).

5. Machine as in any claim hereinbefore, **characterized in that** said transfer means (30) comprise a slider (31), able to be moved by means of a first linear actuator (34) between said loading station (25) and said delivery device (21) and vice versa, and in that a centering member (26) is assembled on said slider (26), able to center said receptacle (11) with respect to said delivery device (21).

6. Machine as in claim 5, **characterized in that** said centering member comprises a plate (26) provided in its upper part with a plurality of seatings (27) with decreasing steps from the periphery toward the center and having a circular or rectangular design, with the sizes of the bases of the different receptacles (11), which said machine can process.

7. Machine as in claim 5 or 6, **characterized in that** said transfer means (30) comprise a second linear actuator (38), able to move said receptacle (11), together with said centering member (26), between said delivery device (21) and said mixing device (22) and vice versa.

8. Machine as in claim 5, 6 or 7, **characterized in that** it also comprises a verification device (60) able to verify that said receptacle (11) has been correctly positioned by the user in said centering member (26), before transferring it toward said delivery device (21).

9. Machine as in any claim hereinbefore, **characterized in that** at least first safety means (85) are interposed between said delivery device (21) and said mixing device (22), to prevent said receptacle (11) and/or the product contained therein from exiting randomly from said mixing device (22), during the functioning of the latter.

10. Machine as in any from claim 1 to 8, **characterized in that** at least second safety means (29) are provided in correspondence with said loading station (25), to prevent the user from gaining access to the inside of said machine (10), beyond said loading station (25), or to said loading station (25) during the operating cycle, including the steps of delivering the coloring substances and of mixing.

11. Machine as in any claim hereinbefore, **characterized in that** it comprises an anti-drying device (75), able to prevent the tips of the delivery needles (74) of the coloring substances from drying out, when said machine (10) is idle.

12. Machine as in any claim hereinbefore, **characterized in that** it comprises a support structure (12), divided substantially into three modular compartments (13, 14 and 15), adjacent and integrated to each other, that in a first compartment (13) of said three compartments a plurality of tanks (20) are disposed, in each of which a coloring substance is contained, that in a second compartment (14) of said three compartments said delivery device (21) is disposed, and that in a third compartment (15) of said three compartments said mixing device (22) is disposed, said second compartment (14) being disposed between said first compartment (13) and said third compartment (15).

13. Machine as in claim 12, **characterized in that** anti-vibration means (39) are interposed between said third compartment (15) and said second compartment (14), to prevent the vibrations produced by said mixing device (22) from spreading to the other compartments (13, 14).

14. Method for the automatic preparation and distribution of at least a fluid coloring product contained in a receptacle (11) containing a paint base, comprising a first step in which, by means of data input means (50) able to be actuated by the user, the user chooses the sizes and capacity of said receptacle (11), the type of said paint base and/or the color of said fluid coloring product to be obtained; a second step in which said receptacle (11) is positioned, even by the user himself, in a loading station (25); a third step in which, by means of a delivery device (21) coloring substances are inserted inside said receptacle (11), according to the data input by the user during said first step; a fourth step in which said receptacle (11) is stirred by a mixing device (22), in order to mix said paint base with said coloring substances, **characterized in that** it also comprises a transfer step during which transfer means (30) transfer said receptacle (11) from

said loading station (25) to said delivery device (21) and vice versa along a first horizontal axis (X), and from said delivery device (21) to said mixing device (22) and vice versa, along a second horizontal axis (Y) which is substantially coplanar and substantially perpendicular to said first horizontal axis (X), a central control unit (59) being associated with said data input means (50) and suitable to control and drive, selectively and in a programmed manner, both said delivery device (21) and said mixing device (22) and also said transfer means (30), in order to cause, in sequence, the movement of said receptacle (11) from said loading station (25) to said delivery device (21) along said first horizontal axis (X), the delivery of said coloring substances inside said receptacle (11) by actuating said delivery device (21), the movement of said receptacle (11) from said delivery device (21) to said mixing device (22) along said second horizontal axis (Y), the stirring of said receptacle (11) so as to mix said paint base with said coloring substances by means of said mixing device (22), the movement of said receptacle (11) from said mixing device (22) to said delivery device (21) along said second horizontal axis (Y), and the movement of said receptacle (11) from said delivery device (21) to said loading station (25) along said first horizontal axis (X).

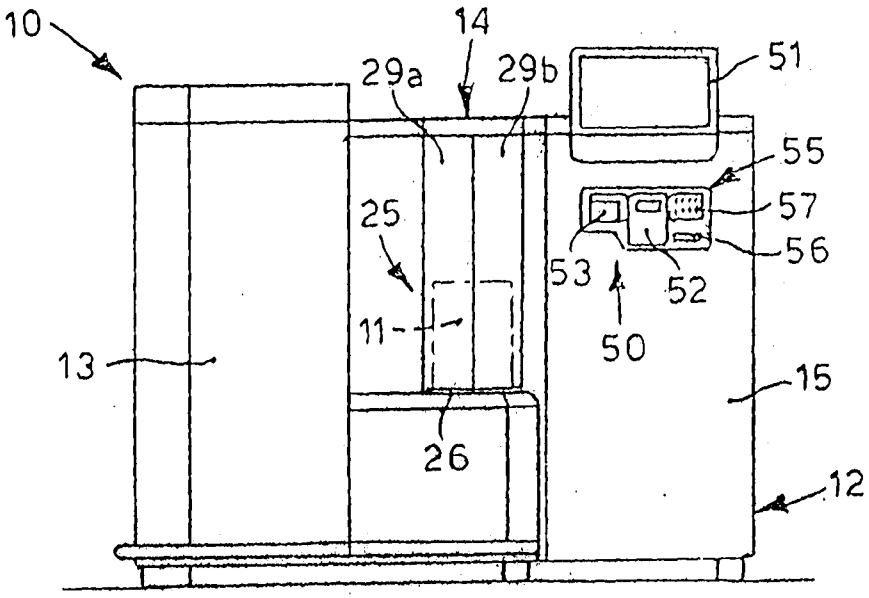

fig. 1

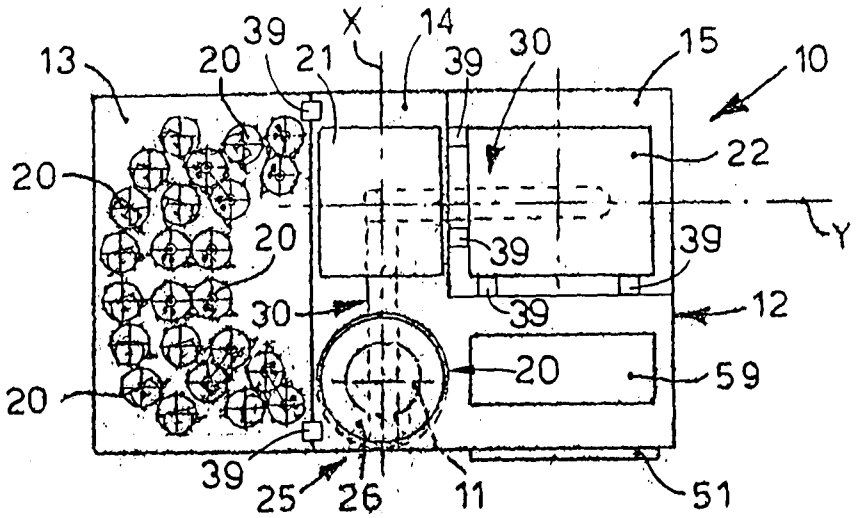

fig. 2

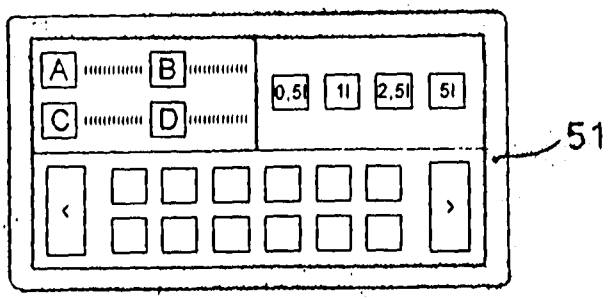

fig. 3

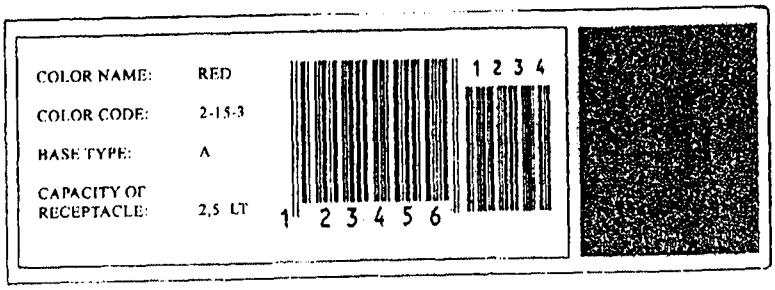

fig. 4

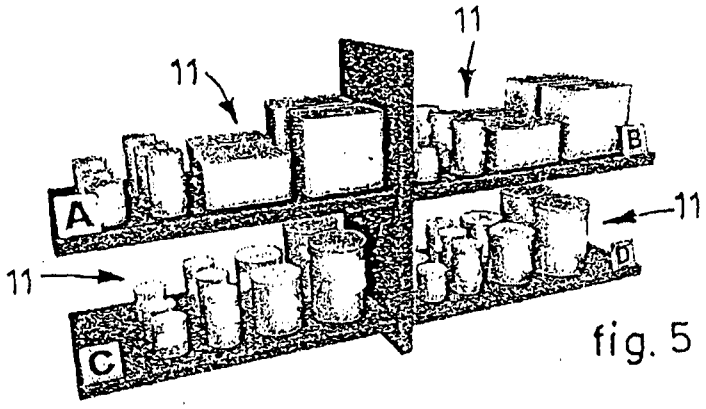

fig. 5

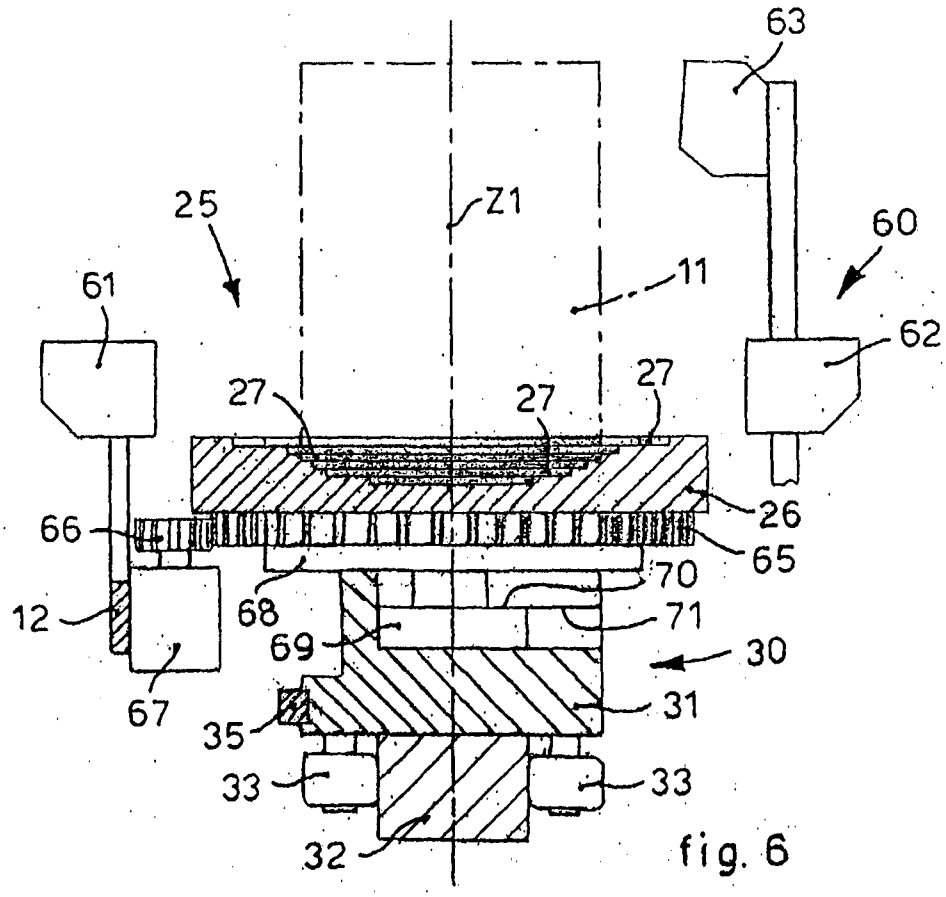

fig. 6

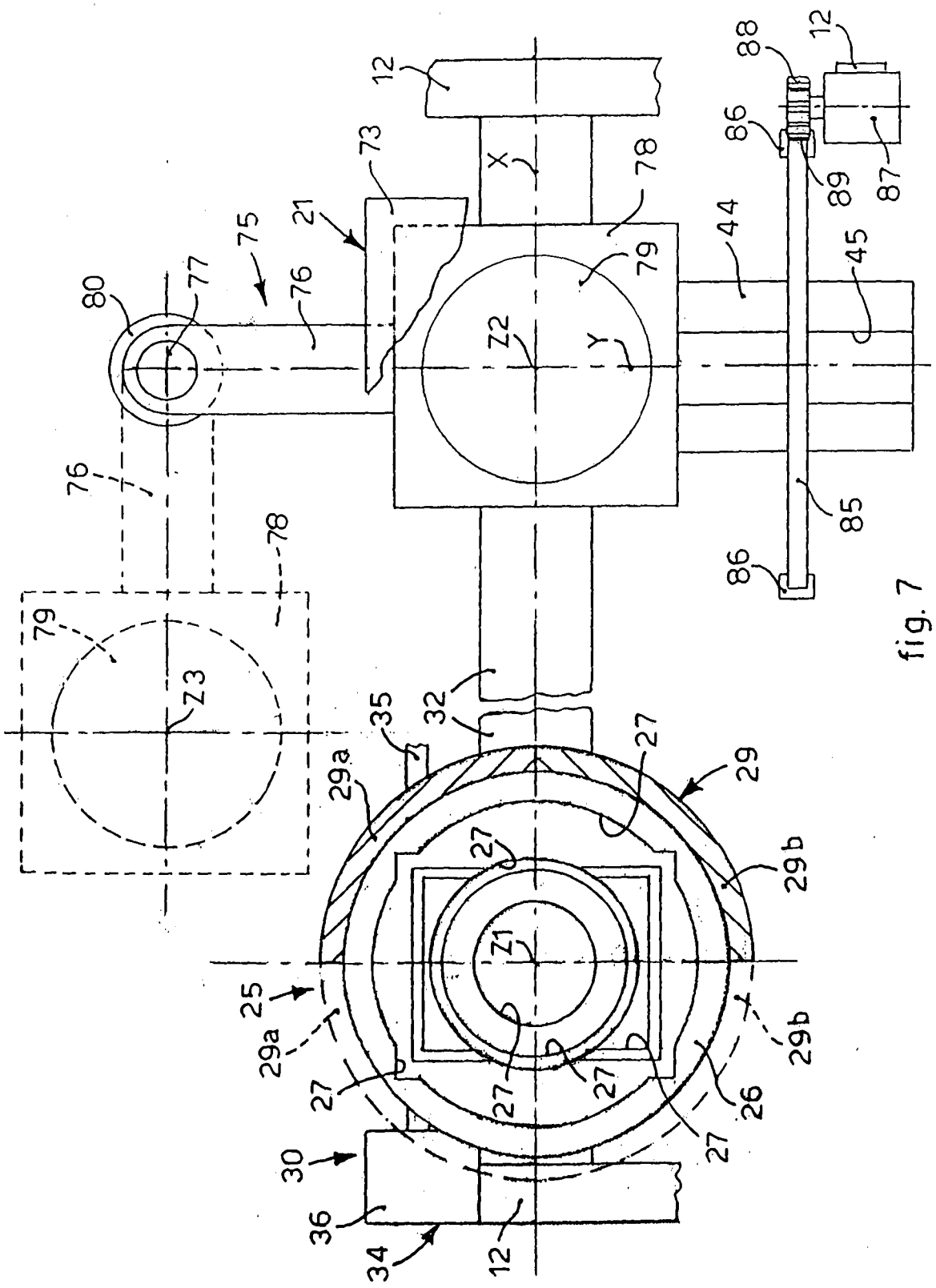
12
73
21
75
76
77
80
78
79
Z2
X
Y
44
45
88
86
89
87
85
Z3
32
35
29a
27
29
29b
Z1
25
26
30
36
34

fig. 7

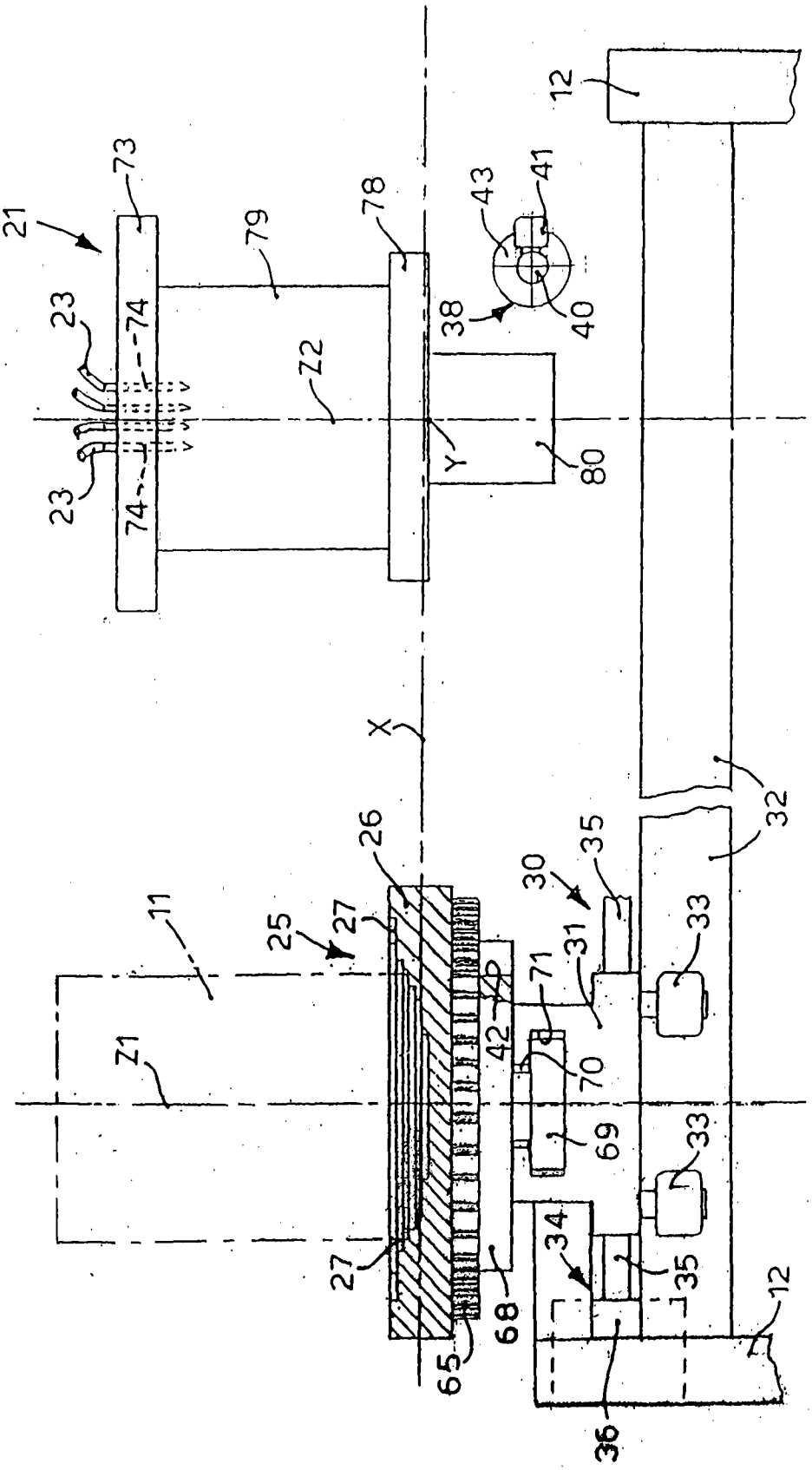
21
73
79
78
43
41
12
23
74
38
40
Z2
Y
80
X
32
26
35
30
11
25
27
31
33
71
42
70
Z1
69
34
68
65
36

fig. 8

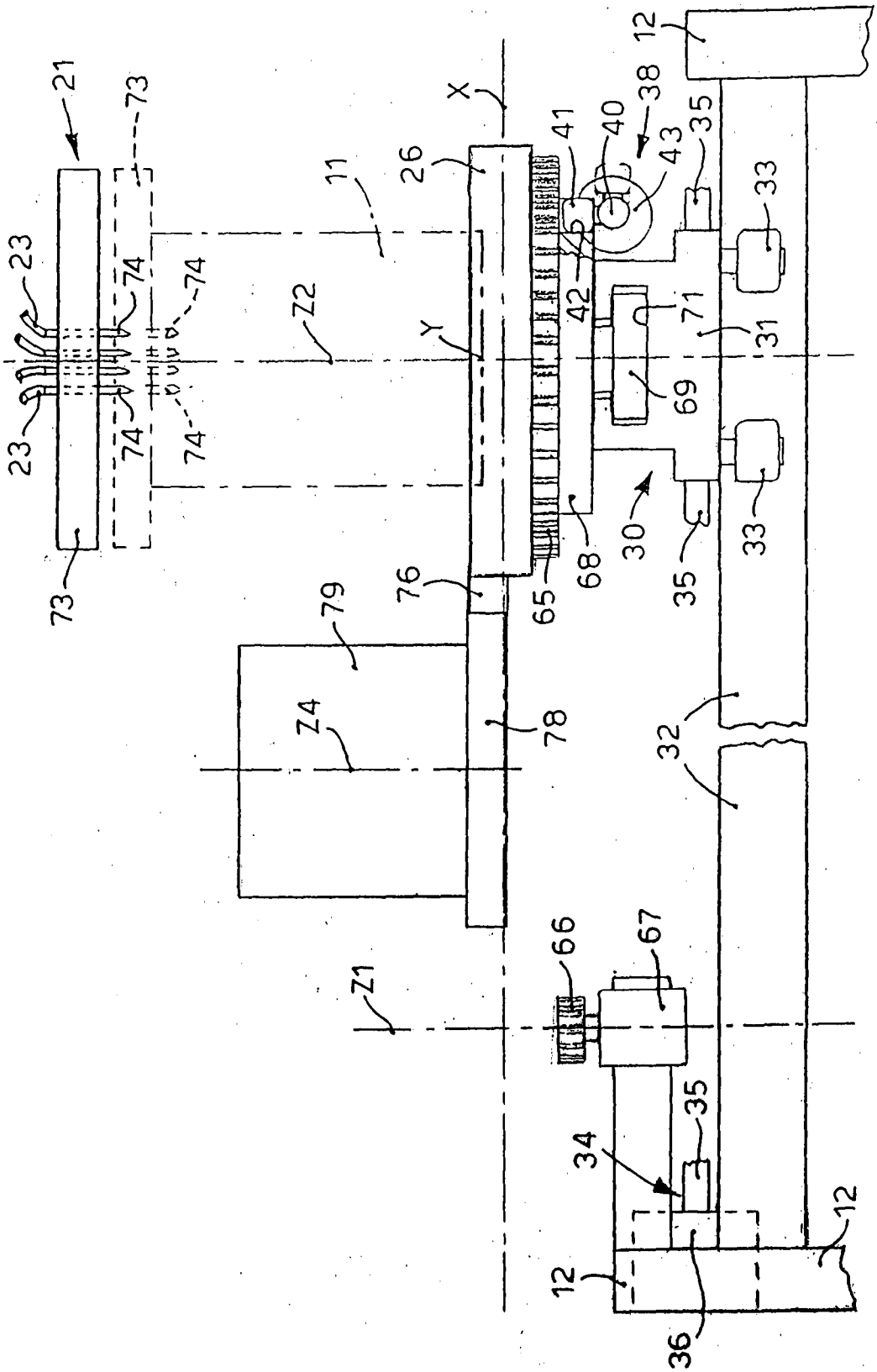
21
73
23
74
74
74
74
23
73
11
26
X
Y
Z2
41
40
38
43
35
33
42
71
31
69
30
35
33
68
65
76
79
Z4
78
32
12
66
67
Z1
35
34
12
12
36

fig. 9

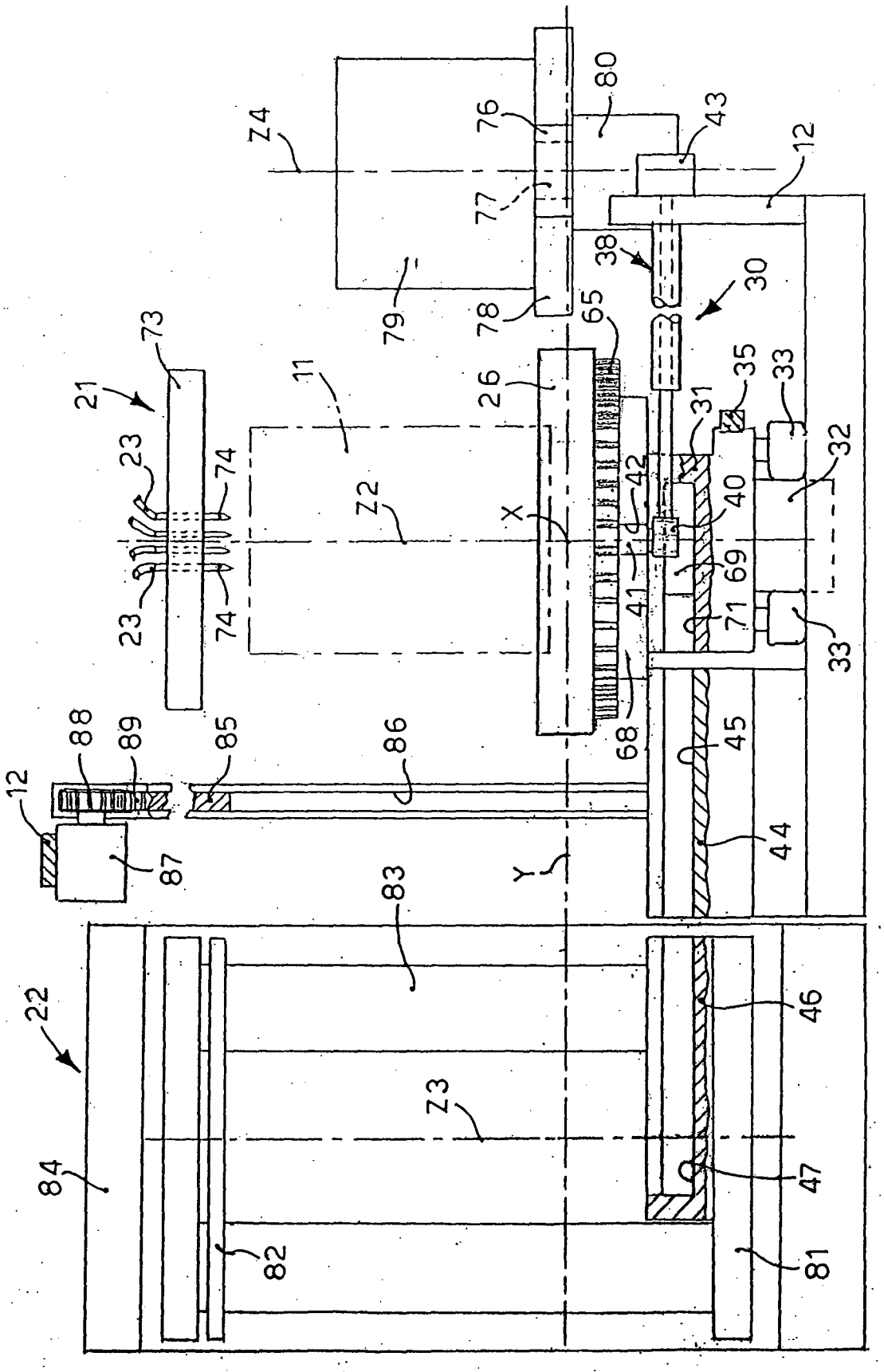
Z4
76
80
43
12
77
38
30
79
78
65
73
21
11
26
35
33
31
23
74
Z2
X
42
40
32
69
41
71
33
68
45
88
89
85
86
12
87
44
Y
83
22
46
Z3
84
47
82
81

fig. 10

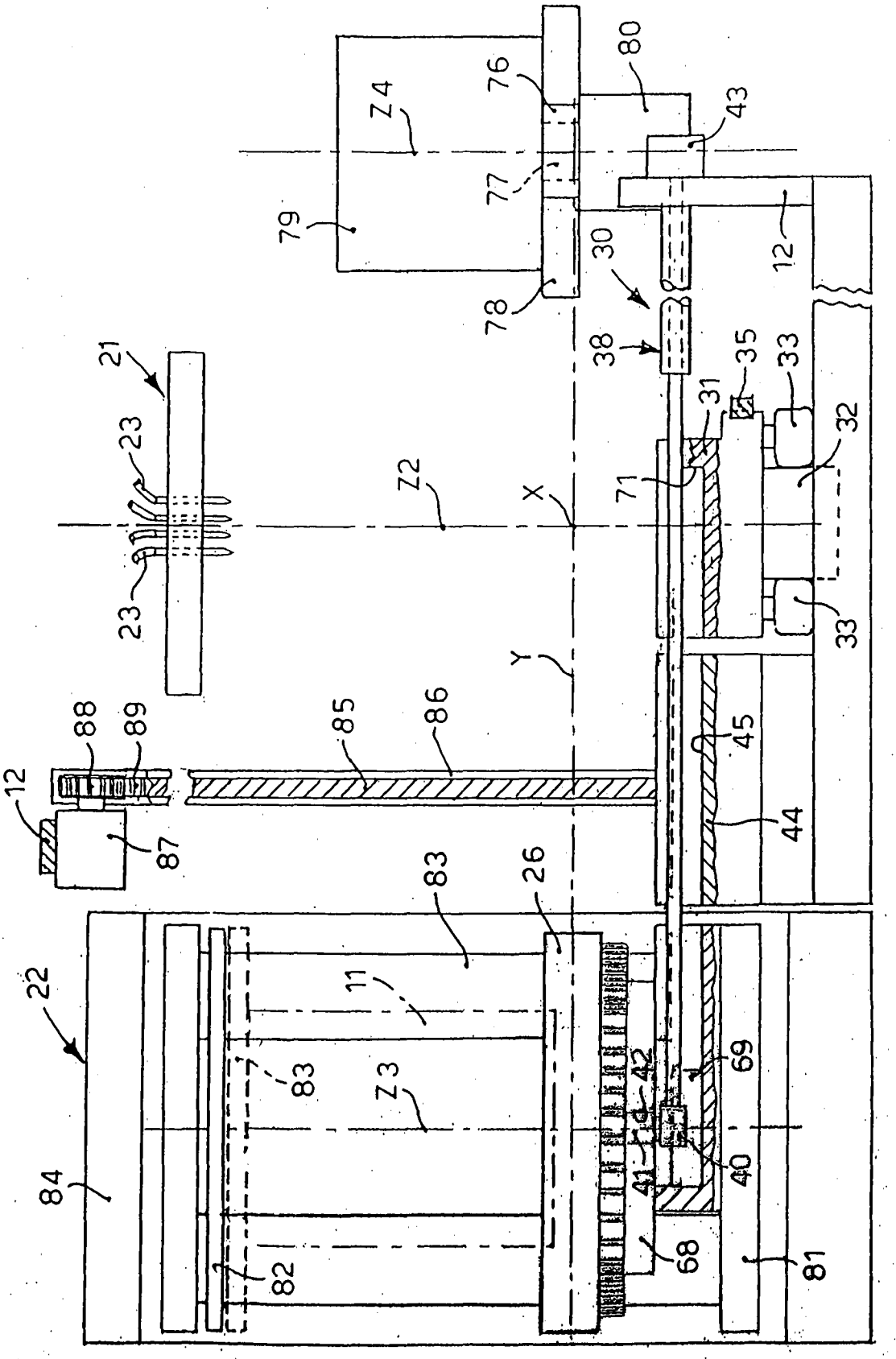
Z4
76
80
43
77
79
30
12
78
38
35
33
21
31
32
23
Z2
X
71
23
33
Y
88
89
85
86
45
12
87
44
83
26
22
11
Z3
83
42
69
84
41
40
68
81
82

fig. 11

INTERNATIONAL SEARCH REPORT

International application No
PCT/IB2011/001453

A. CLASSIFICATION OF SUBJECT MATTER
INV. B01F15/00 B01F13/10 B01F9/00 B01F11/00
ADD.

According to International Patent Classification (IPC) or to both national classification and IPC

B. FIELDS SEARCHED

Minimum documentation searched (classification system followed by classification symbols)
B01F

Documentation searched other than minimum documentation to the extent that such documents are included in the fields searched

Electronic data base consulted during the international search (name of data base and, where practical, search terms used)
EPO-Internal, WPI Data

C. DOCUMENTS CONSIDERED TO BE RELEVANT

Category*	Citation of document, with indication, where appropriate, of the relevant passages	Relevant to claim No.
X	US 2008/051936 A1 (LINDBLOM BO [SE]) 28 February 2008 (2008-02-28)	1-12,14
Y	paragraphs [0001], [0016], [0017], [0020], [0021] abstract; figures 1-3	13
X	EP 2 025 393 A1 (VALPAINT S P A [IT]) 18 February 2009 (2009-02-18)	1-12,14
Y	paragraphs [0002], [0018], [0021], [0024] - [0059] abstract; figures 1A,1B,2A,2B,3	13
A	JP 2 060800 A (NIPPON PAINT CO LTD) 1 March 1990 (1990-03-01) abstract; figures 1-7	1-14

-/--

[X] Further documents are listed in the continuation of Box C.

[X] See patent family annex.

* Special categories of cited documents :

"A" document defining the general state of the art which is not considered to be of particular relevance

"E" earlier document but published on or after the international filing date

"L" document which may throw doubts on priority claim(s) or which is cited to establish the publication date of another citation or other special reason (as specified)

"O" document referring to an oral disclosure, use, exhibition or other means

"P" document published prior to the international filing date but later than the priority date claimed

"T" later document published after the international filing date or priority date and not in conflict with the application but cited to understand the principle or theory underlying the invention

"X" document of particular relevance; the claimed invention cannot be considered novel or cannot be considered to involve an inventive step when the document is taken alone

"Y" document of particular relevance; the claimed invention cannot be considered to involve an inventive step when the document is combined with one or more other such documents, such combination being obvious to a person skilled in the art.

"&" document member of the same patent family

Date of the actual completion of the international search	Date of mailing of the international search report
4 November 2011	29/11/2011

Name and mailing address of the ISA/	Authorized officer
European Patent Office, P.B. 5818 Patentlaan 2 NL - 2280 HV Rijswijk Tel. (+31-70) 340-2040, Fax: (+31-70) 340-3016	Brunold, Axel

1

Form PCT/ISA/210 (second sheet) (April 2005)

INTERNATIONAL SEARCH REPORT

International application No
PCT/IB2011/001453

C(Continuation). DOCUMENTS CONSIDERED TO BE RELEVANT

Category*	Citation of document, with indication, where appropriate, of the relevant passages	Relevant to claim No.
A	US 5 203 387 A (HOWLETT PHILIP [US] ET AL) 20 April 1993 (1993-04-20) abstract; figures 1-30B	1-14
A	EP 1 439 000 A2 (VALPAINT S R L [IT] VALPAINT S P A [IT]) 21 July 2004 (2004-07-21) abstract; figures 1,2	1-14
A	US 4 705 083 A (ROSSETTI EDOARDO [IT]) 10 November 1987 (1987-11-10) abstract; figures 1-9	1-14
Y	EP 0 478 212 A1 (DUNN EDWARDS CORP [US]; FLUID MANAGEMENT LP [US]) 1 April 1992 (1992-04-01) column 9, line 16 - column 10, line 1 abstract; figures 6, 8-10 claims 11,12,27,28	13
Y	US 2 293 451 A (ZEGALIA JOHN C) 18 August 1942 (1942-08-18) page 2, lines 35-49 figure 9	13

1

INTERNATIONAL SEARCH REPORT

Information on patent family members

International application No
PCT/IB2011/001453

Patent document cited in search report	Publication date	Patent family member(s)	Publication date
US 2008051936 A1	28-02-2008	SE 528575 C2	19-12-2006
		SE 0402318 A	28-03-2006
		WO 2006036096 A1	06-04-2006
EP 2025393 A1	18-02-2009	AT 482022 T	15-10-2010
		ES 2353469 T3	02-03-2011
JP 2060800 A	01-03-1990	JP 1984918 C	25-10-1995
		JP 6098879 B	07-12-1994
US 5203387 A	20-04-1993	NONE	
EP 1439000 A2	21-07-2004	NONE	
US 4705083 A	10-11-1987	CA 1254973 A1	30-05-1989
		DE 3581197 D1	07-02-1991
		DK 270186 A	07-08-1986
		WO 8602320 A1	24-04-1986
		EP 0198856 A1	29-10-1986
		FI 862502 A	11-06-1986
		IT 1199500 B	30-12-1988
EP 0478212 A1	01-04-1992	AU 635664 B2	25-03-1993
		AU 8478691 A	02-04-1992
		BR 9104173 A	02-06-1992
		CA 2051931 A1	29-03-1992
		DE 69115411 D1	25-01-1996
		DE 69115411 T2	04-07-1996
		FI 914562 A	29-03-1992
		JP 2096890 C	02-10-1996
		JP 4260432 A	16-09-1992
		JP 7110336 B	29-11-1995
		US 5116134 A	26-05-1992
US 2293451 A	18-08-1942	NONE	