Nov. 12, 1935. E. MENDENHALL ET AL 2,020,513

OIL SEALED SUBMERSIBLE STRUCTURE

Filed Feb. 5, 1934 2 Sheets-Sheet 1

Fig. 1.

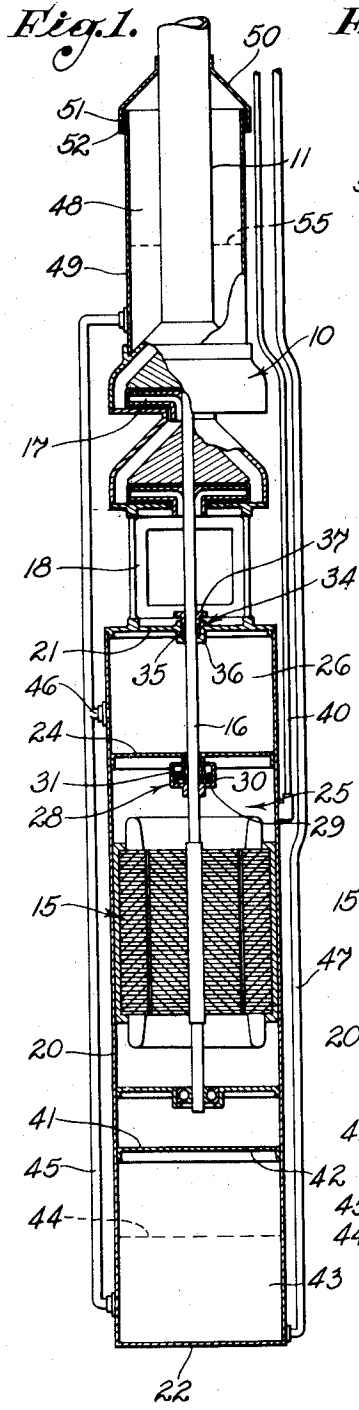

Fig. 2.

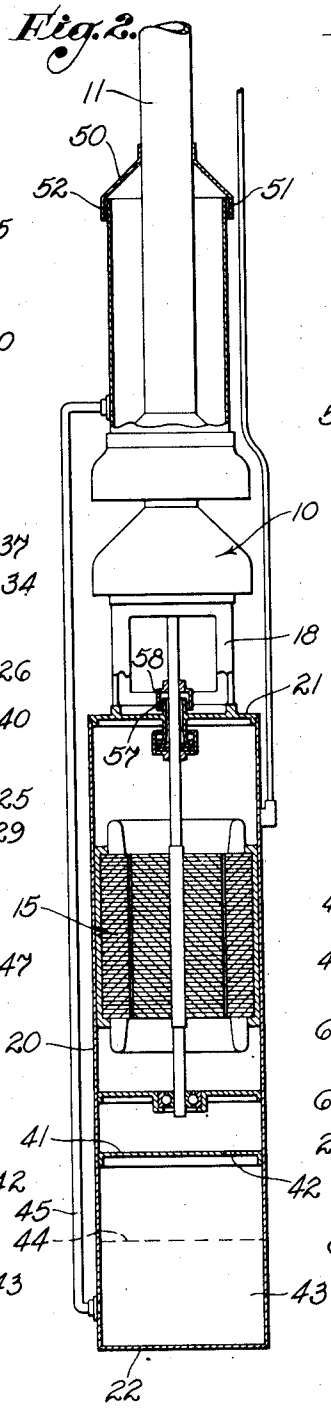

Fig. 3.

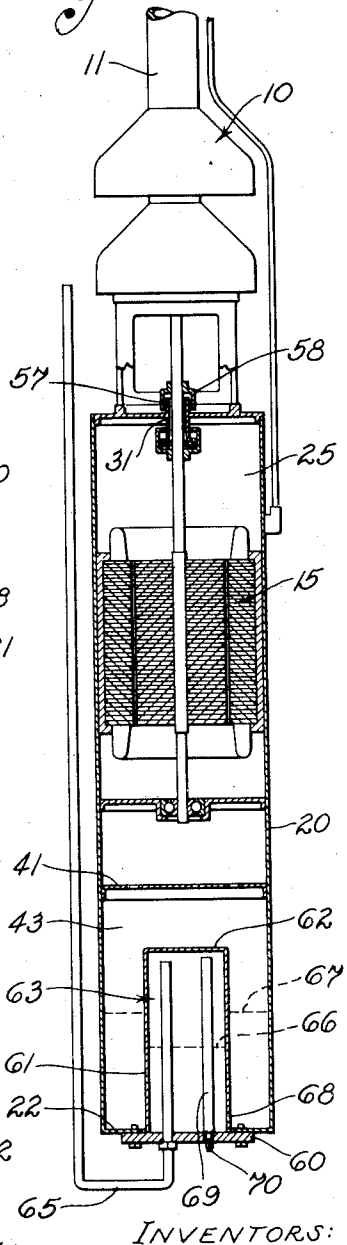

INVENTORS:
Earl Mendenhall
Junius B. Van Horn,
BY Fred W. Lamm
ATTORNEY.

Nov. 12, 1935. E. MENDENHALL ET AL 2,020,513

OIL SEALED SUBMERSIBLE STRUCTURE

Filed Feb. 5, 1934 2 Sheets-Sheet 2

Fig. 4.

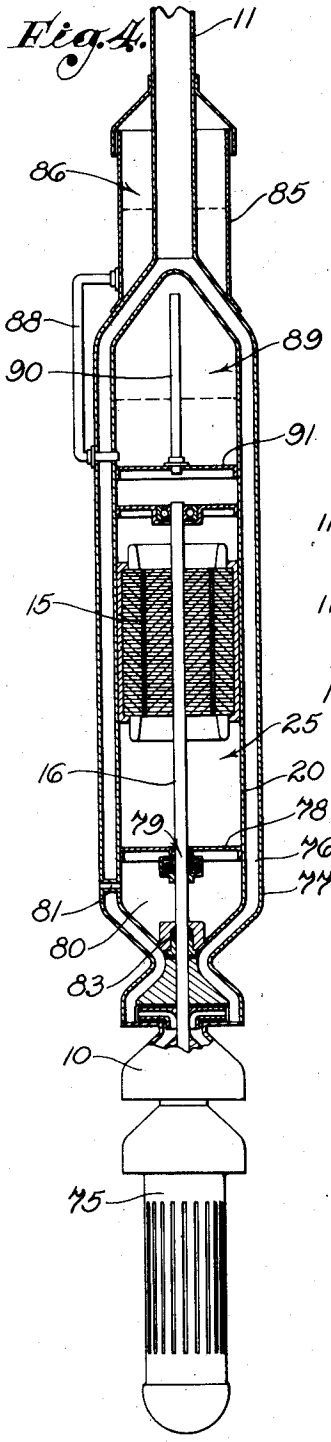

Fig. 5.

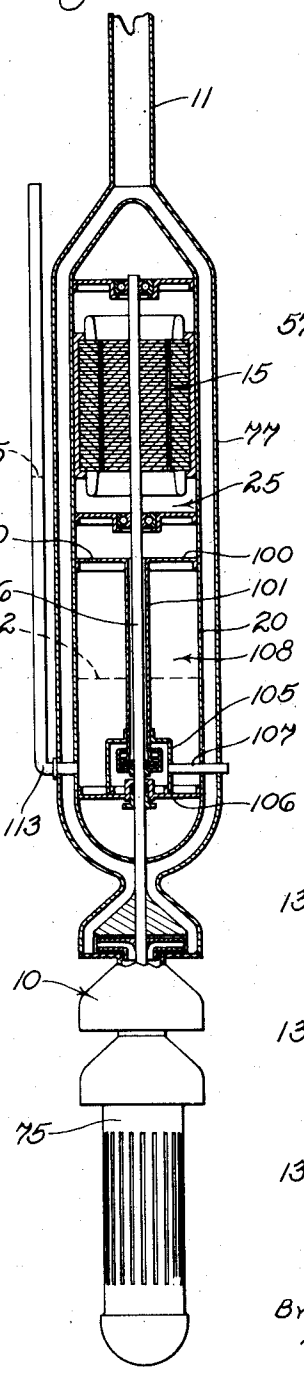

Fig. 6.

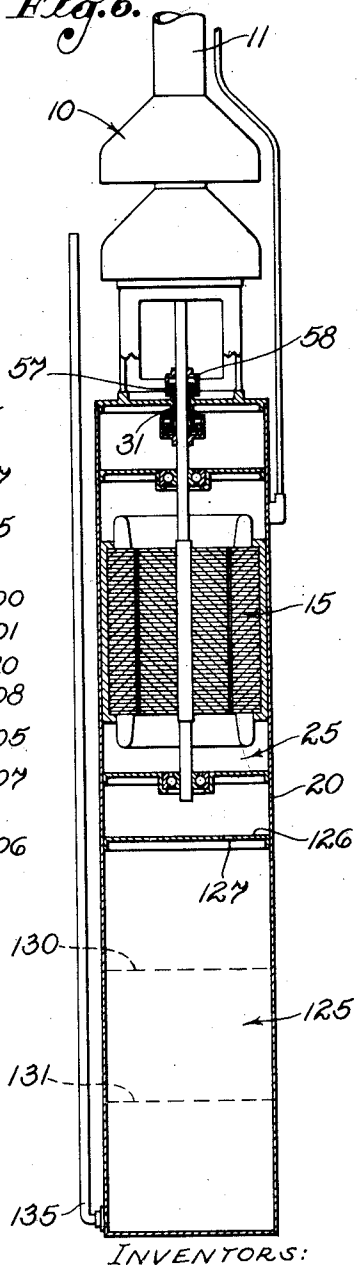

INVENTORS:
Earl Mendenhall
Junius B. Van Horn,
BY Fred W. Harris
ATTORNEY.

Patented Nov. 12, 1935 2,020,513

UNITED STATES PATENT OFFICE

2,020,513

OIL-SEALED SUBMERSIBLE STRUCTURE

Earl Mendenhall, Los Angeles, and Junius B. Van Horn, Alhambra, Calif., assignors to Menhorn, Inc., Los Angeles, Calif., a corporation of California

Application February 5, 1934, Serial No. 709,842

19 Claims. (Cl. 172—36)

Our invention relates to submersible structures, and more particularly to a structure in which a body of liquid inside the unit can be effectively separated from the external liquid in which the unit is submerged.

It is often desirable to be able to submerge a unit of one type or another containing a body of internal liquid, and to effectively separate this liquid from the external liquid. In the present invention this is done through the medium of a third liquid, hereinafter termed an "intermediate" liquid, which is positioned in separating relationship with respect to the internal and external liquids, the provision of such a structure being one of the important objects of the present invention.

Another feature of the invention is that this body of intermediate liquid which is interposed between the internal and external liquids acts to transfer pressure therebetween, and at the same time prevents any contact between the internal and external liquids which might contaminate the former.

The invention is further characterized by a novel form of chamber for retaining this intermediate liquid, this chamber, in the preferred embodiment of the invention, being U-shaped. By such means it is possible to have the intermediate liquid contact the external liquid in one leg of the U-shaped chamber, and to permit contact between the intermediate liquid and the internal liquid in the other leg of this U-shaped chamber.

The invention finds particular utility in structures wherein a shaft extends from the unit, and a seal is positioned at the junction of this shaft and some portion of the unit. In this event the body of intermediate liquid interposed between the internal and external liquids acts to transfer pressure between opposite sides of the seal and thus prevent leakage therethrough.

Another feature of the present invention lies in the utilization of a reservoir containing pressure-transfer bodies of the external and intermediate liquids, this reservoir being preferably positioned adjacent one end of the chamber containing the internal liquid. More particularly, this reservoir can be made concentric with a pipe means extending upward from the submerged unit to a point above the surface of the external liquid in which it is submerged.

It is an object of the present invention to provide a structure including one or all of the above-mentioned features.

Other objects and advantages of the invention will be made evident from the following description of several embodiments of the invention.

We have chosen to illustrate the invention in conjunction with a submersible motor-pump unit, but it should be understood that we are not in all instances limited to such a use of the invention.

Referring to the drawings,

Fig. 1 is a cross-sectional view of a submersible motor-pump unit.

Figs. 2 to 6 are alternative forms illustrating other motor-pump combinations incorporating the invention.

Referring particularly to Fig. 1, we have illustrated a turbine pump 10 which is suspended in an external liquid by a pipe 11 which carries the discharge of the pump upward to a point above the surface of this external liquid. Thus, the pump 10 may be positioned in a well, in which event the external liquid will constitute the well liquid, or it may be lowered into a tank or pit. An electric motor 15 includes a shaft 16 which is directly connected to the pump, the pump illustrated being of the centrifugal type including impellers 17 directly connected to the shaft 16, and drawing liquid through the openings of a frame 18 secured to the lower end of the pump.

The invention finds particular utility when such a motor-pump unit is lowered into an external liquid which might be injurious to the motor 15 should it come in contact therewith. Thus, if it is desired to pump an oil well it is desirable to submerge the pump 10 and the motor 15 in the oil at the bottom of the well. Crude oil, however, almost invariably carries water and other foreign material of a conducting nature, and if such conducting material comes in contact with the windings of the motor 15, the motor will be quickly burned out.

In the present invention the crude oil or other external liquid is kept from the motor 15 by encasing the motor in a shell 20 secured to the lower end of the frame 18. In the form shown in Fig. 1 this shell includes a top head 21, and a lower head 22. An intermediate wall 24 extends across the shell 20 and divides the upper portion of this shell into a chamber 25 hereinafter termed a "motor chamber", and an intermediate chamber 26. The shaft 16 extends through this intermediate wall, the junction being sealed by a suitable seal 28. This seal is shown as being of the mercury type, including a cup 29 secured to the shaft so as to rotate therewith, this cup containing a body of mer-

cury 30. Depending from the intermediate wall 24 is an apron 31 which extends downward into the mercury 30, thus dividing the surface of the mercury into two portions, one portion communicating with the intermediate chamber 26 through the annular space between the shaft 16 and the apron 31, and the other portion communicating directly with the motor chamber 25. This seal is so designed that the lower end of the apron 31 will be submerged in the mercury at all times regardless of rotation of the shaft 16.

So also the junction of the shaft 16 and the upper head 21 is sealed by a seal 34. This seal may be of the same type as the seal 28, or may be of any other type. As illustrated in Fig. 1, this seal includes a packing 35 compressed in a socket 36 of the upper head 21 by a gland 37 in a well-known manner.

The motor 15 is surrounded by an internal liquid which, in this instance, is an oil of high dielectric strength. This oil may be supplied to the motor chamber through a pipe 40 extending upward above the external liquid, and, if desired, the conductors supplying current to the motor may extend downward through this pipe.

The lower end of the motor chamber 25 is bounded by a wall 41 including one or more openings 42. The space between the wall 41 and the lower head 22 has been termed an auxiliary chamber 43. The upper portion of this chamber contains a body of the internal liquid, in this instance dielectric oil, and this body of liquid is in open communication with the motor chamber 25 through the opening 42. The lower portion of the auxiliary chamber 43 contains a body of a third liquid, hereinafter termed an intermediate liquid, which is of greater density than the internal liquid and which is relatively immiscible therewith. The bodies of internal and intermediate liquids are in contact in the auxiliary chamber 43, the surface of contact being indicated by the dotted line 44.

A conduit means 45 communicates with the body of intermediate liquid in the auxiliary chamber 43 and extends upward to a point above the pump 10. A nipple 46 communicates between this conduit means 45 and the intermediate chamber 26 so that this intermediate chamber may be wholly or partially filled with the intermediate liquid. This intermediate liquid is of greater density than the external liquid, and is relatively immiscible therewith, so that if any of the external liquid leaks through the seal 34 it will accumulate in the upper end of the intermediate chamber 26. It is sometimes desirable to be able to add additional of this intermediate liquid to the structure. This may be done by the provision of a pipe 47 extending to the top of the well. Usually, however, this pipe can be dispensed with.

The upper end of the conduit means 45 communicates with a reservoir 48, preferably formed around the pipe 11. As shown, this reservoir is defined between the shell 49 and the pipe 11, this shell being secured in fluid-tight relationship with the pump 10. The upper end of the shell is covered by a skirt 50. It is desirable that the upper end of the reservoir 48 be in open communication with the external liquid. In this embodiment of the invention this is effected by providing a lip 51 at the lower end of the skirt 50 and of slightly larger diameter than the shell 49 so as to provide an annular space 52 therebetween. This upward extending space is relatively narrow so as to strain any foreign material from the external liquid before this liquid enters the reservoir 48. Other types of strainers may be utilized. The skirt 50 has the additional advantage that any foreign material which may drop downward in the external liquid is guided outward over the upper end of the shell 49 so as not to enter the reservoir 48.

The upper end of the reservoir 48 is thus filled with a body of the external liquid, and the lower end of this reservoir may contain a body of the intermediate liquid. These liquids will then be in pressure-transferring contact at a surface indicated by the dotted lines 55, for instance.

Before installing this form of the invention it is desirable to substantially fill the motor chamber 25 and the auxiliary chamber 43 with the internal liquid. Thereafter the intermediate liquid can be poured into the reservoir 48. It is preferable to supply sufficient intermediate liquid to displace a portion of the internal liquid from the auxiliary chamber 43 until this chamber is at least partially filled with the intermediate liquid. It is preferable to avoid air pockets in the upper portion of the chamber 25 and the intermediate chamber 26. By careful manipulation this can be done, or, if desired, suitable vents may be installed, these vents being closed when the chambers are substantially filled. It is preferable to at least partially fill the reservoir 48 with the intermediate liquid before the unit is submerged. There will be no danger of the mercury in the seal 28 being displaced because the pressures in the intermediate chamber 26 and the motor chamber 25 are substantially equalized by the pressure-equalizing relationship of the liquids in the auxiliary chamber 43.

As the unit is being submerged in the external liquid a portion of this external liquid will enter the upper portion of the reservoir 48 and thus contact the body of intermediate liquid therein. It will thus be clear that any change in pressure of the external liquid will be transmitted to the internal liquid through the intermediate liquid. In this connection it will be clear that the auxiliary chamber 43, the conduit means 45, and the reservoir 48 act as a balance chamber which is effective in transmitting such changes in pressure to the internal liquid. Thus, as the unit is being submerged the pressure at the depth of submergence will increase as the submergence increases, yet this increased pressure will be automatically transmitted to the internal liquid and to the intermediate chamber 26 so that there is never any tendency to disruptively displace the mercury in the seal 28. If the pipe 40 is open at its upper end, the action of the balance chamber will force a column of liquid upward therein to a level substantially opposite the level of the external liquid in which the unit is being submerged. This will slightly raise the surface of contact indicated by the numeral 44, but this movement will be slight due to the large difference in diameter between the auxiliary chamber 43 and the internal diameter of the pipe 40. Thus, the surfaces 44 and 55 will not materially change in position as the unit is being installed.

When in operation the balance system maintains the pressure on the internal liquid substantially the same as the pressure on the external liquid in which the unit is submerged disregarding the slight pressure differential which may be set up due to the presence of the body of intermediate liquid. It will be clear, however, that this intermediate liquid prevents any direct contact between the external liquid and the internal liquid. Thus, the unit can be submerged

in a liquid which would be readily miscible with the internal liquid should it come in contact therewith. If the unit is submerged in an oil well, there will be no danger of the crude oil coming in contact with the dielectric oil in the motor due to the presence of the body of intermediate liquid separating these oils.

One particularly desirable feature of the form of the invention shown in Fig. 1 is that the balance chamber (including the auxiliary chamber 43, the conduit means 45, and the reservoir 48) is of U-shape. The reservoir 48 and the conduit means 45 may be considered as one leg of this U-shaped chamber, while the auxiliary chamber 43 may be considered the other leg. This structure is of particular advantage when the unit is being installed, in view of the fact that there is no danger of either the internal or intermediate liquids draining therefrom prior to the time that the unit is submerged.

Additional internal liquid may be supplied to the motor chamber through the pipe 40. This will lower the surface of contact 44, but even if this surface is lowered below the conduit means 45 no detrimental results will follow, for the surplus dielectric oil will merely bubble upward through the conduit means 45 and into the external liquid. Usually, however, it is preferable to maintain the surface 44 above the lower end of the conduit means 45.

It will at once be apparent that this system will automatically compensate for the expansion and contraction of the internal liquid, due to the heating and cooling of the motor 15. As the motor heats up the internal liquid expands and the surface 44 will be slightly lowered. When the motor cools off a slight reverse flow will take place. Regardless of this, however, the pressures will be maintained substantially balanced and there will be no tendency for the internal liquid to become contaminated.

The form of the invention shown in Fig. 2 is identical with that shown in Fig. 1 with the exception that the intermediate chamber 26 is eliminated. Thus, while the mercury seal 28 in Fig. 1 separates the internal liquid from a body of the intermediate liquid, this mercury seal in the form of the invention shown in Fig. 2 separates the internal liquid from the external liquid. No disruptive displacement of the mercury takes place due to the fact that the pressure adjacent the frame 18 varies proportionally with any change in pressure in the external liquid, such a change in pressure being, of course, transmitted to the interior of the motor chamber through the action of the reservoir 48 and the auxiliary chamber 43.

In the form of the invention shown in Fig. 2 the apron 31 of the mercury seal depends from the upper head 21. It is preferable to extend this apron upward beyond the head so as to form a neck 57. An inverted cup 58 is preferably secured to the shafts so as to extend downward around the neck 57 thereby preventing any sand or other foreign material from entering the seal.

In the form of the invention shown in Fig. 3 the reservoir is positioned below the motor chamber 25 rather than thereabove. In this form of the invention an opening is formed in the lower head 22 and is closed by a plate 60 detachably connected thereto. This plate carries an upward extending shell 61 closed by a cover 62, the interior of this shell comprising the reservoir, this reservoir being designated by the numeral 63. In this form of the invention a U-shaped pipe 65 is utilized, one end of this pipe extending through the plate 60 in fluid-tight relationship and terminating in the upper end of the reservoir 63. The other end of this pipe extends upward along the shell 20 and preferably extends to a point above the motor chamber 25. The upper end of this pipe 65 is in open communication with the external liquid so that this external liquid may flow downward through the pipe 65 and thence upward into the upper portion of the reservoir 63.

The lower portion of the reservoir 63 contains a body of the intermediate liquid, which body may contact the body of external liquid in the upper end of the reservoir at a level indicated by the dotted line 66. In this form of the invention the space below the head 41 and outside the shell 61 comprises the auxiliary chamber 43, the upper end of this auxiliary chamber containing a body of the internal liquid. As previously described the lower end of this auxiliary chamber contains a body of the intermediate liquid, these liquids contacting in the auxiliary chamber 43 at a surface such as indicated by the numeral 67. The lower end of the reservoir 63 and the lower end of the auxiliary chamber 43 are in open communication through a port 68. In this form of the invention the balance chamber includes the auxiliary chamber 43, the port 68, the reservoir 63 and the pipe 65, and it will be clear that a substantial balance will be maintained inside and outside the shell 20. The relative positions of the surfaces 66 and 67 will, of course, change with the amount of internal liquid in the shell 20, but it is only necessary to keep the surface 66 above the port 68.

A vent pipe 69 preferably extends upward to communicate with the upper end of the reservoir 63, this vent pipe being secured to the plate 60 and being normally closed by a plug 70. This plug can be removed so that the pipe 69 acts as a vent or conducting means for preliminarily introducing the external liquid into the reservoir 63 preparatory to submergence. Once the unit is submerged, it is usually immaterial whether or not the plug is in place. When, however, the unit is being installed or withdrawn it is preferable to utilize the plug 70. In practice this plug is only removed during the time that the reservoir 63 is being filled preparatory to lowering the unit into the external liquid.

In the form of the invention shown in Fig. 4 the pump 10 is positioned below the motor. In this form of the invention the lower end of the pump carries a strainer 75, and the pump discharges into an annular space 76 defined between the exterior of the shell 20 and a casing 77. In this form, the motor chamber 25 is bounded at its lower end by a wall 78 through which the shaft 16 extends, the junction of the shaft and this wall being sealed by a suitable seal 79, preferably of the mercury type. The space below the wall 78 includes a chamber 80 which communicates with the external liquid through a passage 81 extending across the annular space 76. Thus, the pressure in the chamber 80 is maintained substantially equal to the pressure of the external liquid. A flow of liquid from the discharge of the pump into the chamber 83 is prevented by a suitable seal 83 which may be of the usual gland type. Any slight leakage taking place through this seal will not detrimentally affect the motor for the leakage will be discharged through the passage 81. It is, however, desirable to maintain such

leakage at a minimum from the stand-point of efficiency.

In this form of the invention the reservoir is formed inside a shell 85 surrounding the pipe 11, the reservoir being indicated by the numeral 86. The upper end of this reservoir communicates with the external liquid in a manner previously described, while the lower end is in communication with a pipe 88 which serves a function similar to the conduit means previously described. The lower end of this pipe 88 communicates with a chamber 89 formed inside the shell 20 and corresponding in function to the auxiliary chamber 43 previously described. The lower ends of the chambers 86 and 89 contain bodies of the intermediate liquid communicating with each other through the pipe 88. The upper end of the chamber 89 contains a body of the internal liquid which is in communication with the motor chamber 25 through a pipe 90 secured to and extending upward from a wall 91 separating the motor chamber from the chamber 89. Thus, the upper end of the chamber 89 communicates with the motor chamber, while the lower end communicates with the reservoir 86. The pressure inside the shell 20 is maintained substantially equal to the pressure of the external liquid due to the action of the balance system including the chamber 89, the pipe 88, and the reservoir 86.

In Fig. 5 an alternative form of the invention is shown utilizing a pump positioned below the motor. In this form of the invention the chamber 89 is positioned below the motor chamber 25, being separated therefrom by a wall 100 which provides a tube 101 extending downward around the shaft 16. The lower end of this tube carries the apron of the mercury seal, this seal being positioned in a seal chamber defined inside a shell 105. This shell 105 extends in fluid-tight relationship with the tube 101 and a lower wall 106, and the sealing chamber communicates with the external liquid through a pipe 107. In this form of the invention the annular space between the tube 101 and the shell 20 comprises an auxiliary chamber 108 corresponding to the auxiliary chamber previously described, the upper end thereof communicating with the motor chamber through one or more ports 110 formed through the wall 100. The lower portion of this auxiliary chamber contains a body of the intermediate liquid which may be in contact with the internal liquid at a surface indicated by the numeral 112. A pipe 113 communicates with the lower portion of the auxiliary chamber 108 and extends outward through the casing 77 and upward to a point at or near the upper end of the motor chamber 25. The top of this pipe 113 opens on the external liquid so that the upper portion of this pipe contains a body of the external liquid. The lower portion of this pipe contains a body of the intermediate liquid, these liquids contacting at a surface indicated by the numeral 115. Thus, this pipe 113 acts as the reservoir in this form of the invention. Any pressure changes in the external liquid are transmitted to the interior of the shell 20 through the U-shaped column of intermediate liquid contained in the lower portion of the pipe 113 and in the lower portion of the chamber 108. This pressure is, of course, transmitted to the mercury seal, but no disruptive displacement of the mercury takes place due to the fact that the pressure in the sealing chamber inside the shell 105 is maintained equal to the pressure in the external liquid due to the pipe 107.

In Fig. 6 still another alternative form of the invention is illustrated. In this form the lower end of the shell 20 forms a balance chamber 125, this balance chamber being separated from the motor chamber 25 by a head 126. However, one or more ports 127 maintain the chamber and the upper portion of the balance chamber 125 in communication with each other. The balance chamber 125 contains superimposed bodies of the external liquid, the intermediate liquid, and the internal liquid. The surface of contact between the intermediate liquid and the internal liquid is indicated by the dotted lines 130, while the surface of contact between the external liquid and the intermediate liquid is indicated by the dotted lines 131. Thus, the space between the lines 130 and 131 is filled with an intermediate liquid. The lower end of the balance chamber communicates with the external liquid through a pipe 135 which extends upward to a point at or near the upper end of the motor chamber, the upper end of this pipe being open to communicate with the external liquid.

This form of the invention can only be used where the internal and external liquids are of substantially different densities and where the intermediate liquid is of a density between the densities of the internal and external liquids, and yet relatively immiscible therewith. It can, for instance, be used in pumping liquids of high density.

If desired, the forms of the invention shown in Figs. 2 to 6, inclusive, may include a pipe corresponding to the pipe 47 of Fig. 1 to supply additional intermediate liquid to these respective structures.

While we have shown our invention as applied to a submersible motor-pump unit, it will be understood that the fundamental concept is not limited to such a structure. Regardless of what is placed in the chamber 25, or regardless of what is connected to the shaft 16, the system finds utility in maintaining the pressures inside and outside the shell 20 substantially equal, and yet preventing actual contact between the internal and external liquids. It should not then be understood that the invention is in all instances limited to use in a submersible motor-pump unit.

We claim as our invention:

1. In a submersible structure, the combination of: a shell defining a chamber containing an internal liquid, said shell being positioned beneath the surface of an external liquid which might contaminate said internal liquid should it come in contact therewith; a shaft extending from said chamber; a seal for sealing the junction of said shaft and said shell; and walls forming a balance chamber communicating at one end with said internal liquid and at the other end with said external liquid and containing a body of an intermediate liquid, one portion of said balance chamber being within said shell and another portion thereof being outside of said shell, said body of intermediate liquid providing two surfaces, one surface being inside said shell and communicating with said internal liquid and the other surface being outside said shell and communicating with said external liquid, said intermediate liquid being relatively immiscible with both said internal and said external liquids.

2. A combination as defined in claim 1 in which said balance chamber is U-shaped and provides two legs, one leg being within said shell and containing said one surface of said intermediate liquid communicating with said internal liquid and the other leg being outside said shell

and containing said other surface of said intermediate liquid communicating with said external liquid.

3. In a submersible structure, the combination of: walls defining a chamber containing an internal liquid, said walls being positioned beneath the surface of an external liquid which might contaminate said internal liquid should it come in contact therewith and which is miscible with said internal liquid; a shaft extending from said chamber; a seal for sealing the junction of said shaft and said walls; and a pressure-transferring body of intermediate liquid interposed between and contacting said internal and external liquids and immiscible with each of said internal and external liquids.

4. In a submersible structure, the combination of: walls defining a chamber containing an internal liquid, said walls being positioned beneath the surface of an external liquid; a shaft extending from said chamber; a seal for sealing the junction of said shaft and said walls; walls forming a balance chamber extending upward to a point above said first-mentioned chamber and containing a body of intermediate liquid; means communicating between one end of said balance chamber and said internal liquid in said chamber whereby said body of intermediate liquid is in pressure-transferring relationship with said internal liquid; and means communicating between the other end of said balance chamber and said external liquid whereby said body of internal liquid is in pressure-transferring relationship with said external liquid.

5. In a submersible structure, the combination of: walls defining a chamber containing an internal liquid, said walls being positioned beneath the surface of an external liquid; a shaft extending from said chamber; a seal for sealing the junction of said shaft and said walls; walls forming a reservoir above said chamber and communicating with said external liquid said reservoir containing a body of an intermediate liquid of greater density than said external liquid and in contact therewith in said reservoir; walls defining an auxiliary chamber at one end of said first-named chamber and communicating therewith, said auxiliary chamber containing contacting bodies of said internal and intermediate liquids; and means communicating between said bodies of intermediate liquids respectively in said reservoir and in said auxiliary chamber.

6. In combination: a submersible unit positioned beneath the surface of an external liquid and including a body of internal liquid; pipe means extending upward from said submersible unit to a point above said surface of said external liquid; walls around said pipe means and above said unit for forming a reservoir communicating with said external liquid; walls defining an auxiliary chamber adjacent said unit and communicating at one end with said internal liquid in said unit; conduit means communicating between said auxiliary chamber and said reservoir; and a body of intermediate liquid filling said conduit means and at least partially filling said auxiliary chamber and said reservoir and being in pressure-transferring relationship with both said internal liquid and said external liquid.

7. A combination as defined in claim 6 including strainer means communicating between said external liquid and said reservoir.

8. In combination in a submersible structure: walls defining a chamber containing an internal liquid, said walls being positioned beneath the surface of an external liquid miscible with said internal liquid should it come in contact therewith; an auxiliary chamber communicating with said first-named chamber and containing contacting bodies of said external liquid and an intermediate liquid; walls defining a reservoir disposed adjacent said auxiliary chamber and containing contacting bodies of said external and intermediate liquids; means communicating between said body of external liquid in said reservoir and the external liquid in which said first-named walls are submerged; and means communicating between said bodies of intermediate liquid respectively positioned in said auxiliary chamber and said reservoir.

9. A combination as defined in claim 1 in which one portion of said seal communicates with said first-named chamber, and in which another portion of said seal communicates with said external liquid.

10. In a submersible structure, the combination of: walls defining a chamber containing an internal liquid, said walls being positioned beneath the surface of an external liquid; a shaft extending from said chamber; walls forming an auxiliary chamber above said first-named chamber and containing a body of said internal liquid in the upper end thereof and a body of an intermediate liquid in the lower end thereof and of greater density than said internal liquid; walls defining a passage communicating at its lower end with said first-named chamber and at its upper end with said body of internal liquid in said auxiliary chamber; and walls defining a reservoir communicating at its lower end with said body of intermediate liquid in said auxiliary chamber and at its upper end with said external liquid and containing bodies of said intermediate and external liquids.

11. In a submersible structure, the combination of: walls defining a chamber containing an internal liquid, said walls being positioned beneath the surface of an external liquid miscible with said internal liquid should it come in contact therewith; a shaft extending from said chamber; a seal for sealing the junction of said shaft and said walls defining said chamber; walls forming an auxiliary chamber vertically disposed relative to said first-named chamber and containing a body of said internal liquid in the upper end thereof and a body of an intermediate liquid in the lower end thereof; means communicating between the internal liquid in said first-named chamber and said body of internal liquid in said auxiliary chamber; walls defining a reservoir containing contacting bodies of said intermediate and external liquids, the body of external liquid in said reservoir communicating with said external liquid in which said first-named walls are positioned; and means communicating between said bodies of intermediate liquid in said auxiliary chamber and in said reservoir whereby said internal and external liquids are separated by said intermediate liquid and thus prevented from coming into contact with each other.

12. In a submersible structure, the combination of: submerged walls defining a main chamber containing a first liquid; a shaft extending from said main chamber; walls defining an intermediate chamber at one end of said main chamber and through which said shaft extends, said intermediate chamber containing a second liquid dissimilar to said first liquid and said liquid in which said submerged walls are positioned; a first seal around said shaft and sealing said main and intermediate chambers from each other; a second seal around said shaft and sealing said in-

termediate chamber from the liquid around said submerged walls; walls defining an auxiliary chamber communicating with said main chamber and containing bodies of said first and second liquids; and conduit means communicating between said body of second liquid in said auxiliary chamber and said second liquid in said intermediate chamber.

13. In combination in a submersible structure: a motor shell providing a motor chamber containing a first liquid; a motor in said motor chamber; support means extending upward from said motor shell, the weight of said motor shell being carried by said support means; walls defining an auxiliary chamber containing bodies of said first liquid and a second liquid, said body of first liquid communicating with said first liquid in said motor chamber; walls defining an annular reservoir around said support means and positioned entirely above said motor shell and above said auxiliary chamber; and walls extending upward from said auxiliary chamber to said annular reservoir and defining a passage communicating between said annular reservoir and said body of second liquid in said auxiliary chamber.

14. In combination in a submersible structure: a motor shell providing a motor chamber containing a liquid and adapted to be submerged beneath the liquid level in a well; a motor in said motor chamber; support means extending upward from said motor shell, the weight of said motor shell being carried by said support means; walls around said support means and defining an annular reservoir above said motor shell; means communicating between the well liquid and said annular reservoir to transmit to said reservoir the pressure variations of said well liquid; and passage means extending downward from said annular reservoir to said shell and communicating between said annular reservoir and the interior of said motor shell and through which pressure is transmitted between said annular reservoir and the interior of said motor shell.

15. In combination in a submersible structure: a submerged shell containing an internal liquid; an auxiliary shell extending vertically in said submerged shell and being of smaller size than said submerged shell to define an annular space therebetween, said auxiliary shell providing a reservoir containing bodies of dissimilar liquids; passage means communicating between said reservoir and said annular space; passage means communicating between the interior of said auxiliary shell and the liquid in which said submerged shell is submerged; a shaft extending from said shell; and a seal sealing the junction of said shaft and said shell.

16. In combination in a submersible structure: a submerged shell containing an internal liquid and providing a lower head; an auxiliary shell extending upward from said lower head inside said submerged shell and being of smaller size than said submerged shell to define an annular space therebetween; passage means communicating between the lower interior of said auxiliary shell and said annular space; and pipe means communicating with the upper interior of said auxiliary shell and controlling the pressure therein, said pressure being transmitted to the interior of said submerged shell through said passage means.

17. In a submersible structure, the combination of: walls defining a chamber containing an internal liquid, said walls being positioned beneath the surface of an external liquid which might contaminate said internal liquid should it come in contact therewith; a shaft extending from said chamber; a seal for sealing the junction of said shaft and said walls, one portion of said seal communicating with said chamber containing said internal liquid; walls defining an intermediate chamber communicating with another portion of said seal and containing an intermediate liquid relatively immiscible with both said internal and said external liquids; and walls forming a balance chamber communicating at one end with said internal liquid and at the other end with said external liquid and containing a body of said intermediate liquid, said body of said intermediate liquid providing two surfaces, one surface communicating with said internal liquid and the other surface communicating with said external liquid.

18. A combination as defined in claim 17 including means communicating between said intermediate chamber and said body of intermediate liquid in said balance chamber.

19. In a submersible structure, the combination of: walls defining a chamber containing an internal liquid, said walls being positioned beneath the surface of an external liquid which might contaminate said internal liquid should it come in contact therewith; a shaft extending from said chamber; a seal for sealing the junction of said shaft and said walls; walls forming a balance chamber communicating at one end of said internal liquid and at the other end with said external liquid and containing a body of an intermediate liquid, said body of intermediate liquid providing two surfaces, one surface communicating with said internal liquid and the other surface communicating with said external liquid, said intermediate liquid being relatively immiscible with both said internal and external liquids; and pipe means communicating with said body of intermediate liquid and extending upward to a point above said surface of said external liquid whereby the quantity of said intermediate liquid in said balance chamber can be changed.

EARL MENDENHALL.
JUNIUS B. VAN HORN.