Jan. 22, 1935. P. GOODMAN 1,988,788

CHAIR

Filed July 27, 1933

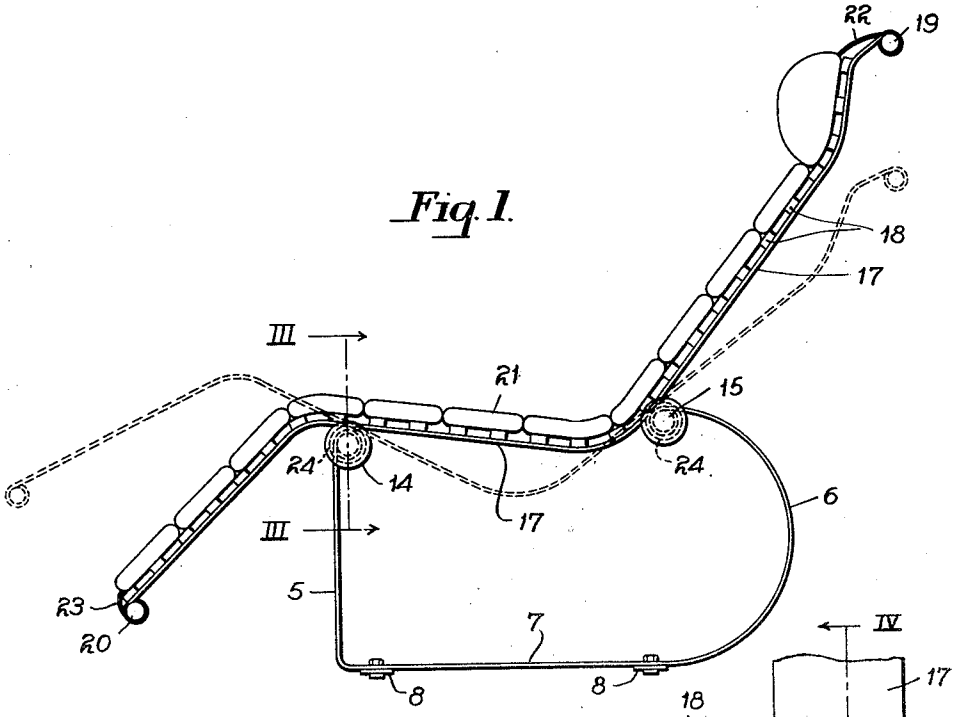

Fig. 1.

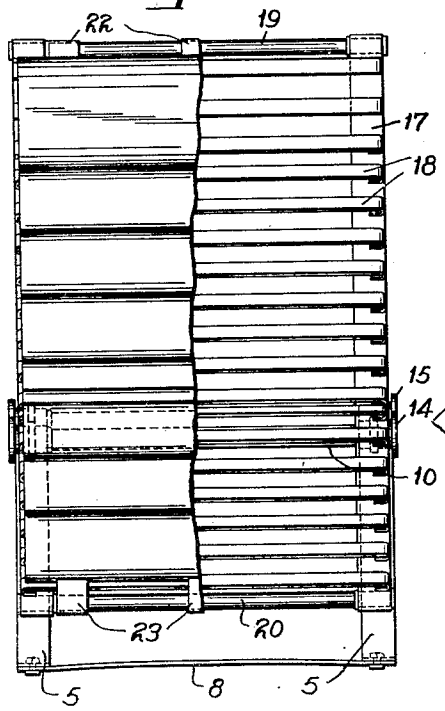

Fig. 2.

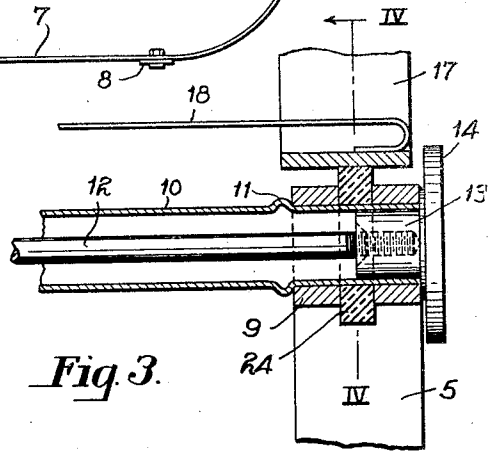

Fig. 3.

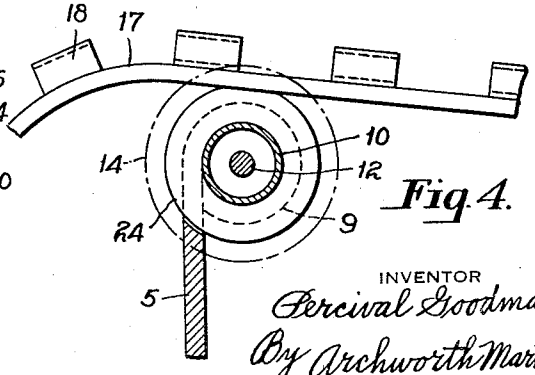

Fig. 4.

INVENTOR
Percival Goodman,
By Archworth Martin,
Attorney.

Patented Jan. 22, 1935 1,988,788

UNITED STATES PATENT OFFICE

1,988,788

CHAIR

Percival Goodman, New York, N. Y., assignor to The McKay Company, Pittsburgh, Pa., a corporation of Pennsylvania

Application July 27, 1933, Serial No. 682,436

4 Claims. (Cl. 155—116)

My invention relates to chairs or similar seat structures, and more particularly to those of the reclining type, although certain features of the invention are capable of use in connection with seat structures of other types.

One object of my invention is to provide a reclining chair which is of simple construction, and of light weight, but nevertheless possessing great strength.

Another object of my invention is to provide a chair which may be adjusted to desired degrees of inclination more readily than various prior art structures.

Still another object of my invention is to provide a chair that can be readily disassembled for packing and storage.

One form which my invention may take is shown in the accompanying drawing, wherein Figure 1 is a side elevational view; Fig. 2 is a front elevational view, partially in section; Fig. 3 is an enlarged view taken on the line III—III of Fig. 1, and Fig. 4 is a view taken on the line IV—IV of Fig. 3.

The lower framework of the chair comprises end frame members each composed of a front leg 5 and a rear leg 6 connected by a horizontally-extending portion 7. This base portion 7 could, of course, be formed separately from and connected to the legs 5 and 6. Cross bars 8 are secured to the base bars 7 and serve to tie them together.

The front legs 5 are curled at their upper ends to form loops or eyes 9 into which the ends of a tubular cross bar 10 extend. The bar 9 is provided at each end with a bead 11 that abuts against the inner ends of the eyes. A tie rod 12 extends through the tubular bar 10, and is threaded at each end for the reception of a nut 13, the nuts 13 having enlarged heads 14 which abut against the outer ends of the eyes 9, and hold such eyes in clamping engagement with the beads 11. The rear legs 6 are similarly connected at their upper ends, the clamping nuts being indicated by the numeral 15. These nuts correspond to the nuts 14 and engage with members corresponding to the members 9, 10 and 12 at the front of the structure.

The parts above-described serve as supports for a seat and back structure which comprises a pair of side bars 17 connected together by cross straps or slats 18, whose ends are bent back and welded or otherwise secured to the side bars, as shown more clearly in Fig. 3. The side bars and the cross straps are preferably made of spring metal so as to yield somewhat under the weight of the sitter. The upper and lower ends of the side bars 17 may be connected in any suitable manner, as by tubular cross bars 19 and 20, which may be joined to the ends of said side bars in the same manner as is the tubular cross bar 10, or some other simple form of connecting device may be employed.

Suitable upholstery may be provided for the seat and the back, and is here shown as consisting of a long pad 21, which may be tufted, or may consist of a series of connected pads. The upholstery 21 is provided with hooks 22 and 23, at its upper and lower ends, respectively, that engage the bars 19 and 20, and hold the upholstery in position. The enlarged heads 14 and 15 of the clamping nuts extend alongside the side bars 17 to prevent the seat structure from sliding in lateral directions off the end frames.

The side bars 17 are supported on friction discs 24, at each of the four corners of the lower framework of the chair. These discs may be of rubber or other suitable material, and snugly fit within slots formed in the eyes 9 at the upper ends of the four leg members. The side bar members can be shifted longitudinally of themselves to incline the seat to a desired degree, as indicated by full-lines and dash lines in Fig. 1. The friction members will hold the seat and back frame against slipping relative to the legs at any set position.

The leg members may be of spring steel, but are fairly rigid so that they will not spread readily, although the rear legs 6 may be of such gauge that they will yield slightly under the weight of a sitter, thus supplementing the yieldability of the side bars 17.

As shown in the drawing, the bends in the side bars 17 which are made to form the leg rests are normally disposed forwardly of the front cross bar 10, while the bends in the side bars which are at the juncture of the seat portion and the inclined back portion are normally disposed forwardly of the rear cross bar at the upper ends of the rear legs 6.

The friction material can be carried either by the lower framework as shown in the drawing, or could be applied to the side bars. The upper frame can conveniently be slid on the lower framework longitudinally of itself when no one is sitting in the chair.

It will also be understood that means other than frictional blocks or pads can be provided for preventing sliding movement of the upper frame on the lower framework.

I claim as my invention:—

1. Chair structure comprising a supporting frame having a lower horizontal portion and upwardly extending front legs of resilient material whose upper ends are horizontally yieldable in forward and rearward directions, and upwardly-extending rear legs of resilient material whose upper ends are similarly yieldable, independently of the front legs, a unitary seat and back, and means at the upper ends of said legs, for slidably and frictionally supporting the said seat and back.

2. Chair structure comprising a supporting frame having a lower horizontal portion and upwardly-extending front legs of resilient material whose upper ends are horizontally yieldable in forward and rearward directions, and upwardly curved rear legs whose upper ends are similarly yieldable, independently of the front legs, and also vertically yieldable, a unitary seat and back, and means at the upper ends of said legs for slidably and frictionally supporting the said seat and back.

3. Chair structure comprising a supporting frame having a lower horizontal portion and upwardly-extending front legs of resilient material whose upper ends are horizontally yieldable in forward and rearward directions, and upwardly curved rear legs whose upper ends are similarly yieldable, independently of the front legs, a unitary seat and back having side bars of spring material connected by cross strips, and means at the upper ends of said legs for slidably and frictionally supporting the said side bars.

4. Chair structure comprising a unitary seat and back frame, and a resilient supporting frame therefor having a lower horizontal portion and an upwardly-extending portion of resilient material at the front and rear whose upper ends terminate in cross bars that are unconnected in their horizontal plane, the seat and back frame being slidably mounted on said bars, so that when weight is imposed on the seat and back frame the cross bars will be sprung away from each other.

PERCIVAL GOODMAN.