Oct. 22, 1940. R. C. WEST 2,219,060

AUTOMATIC WORK STOP

Filed March 15, 1940

Fig. 1.

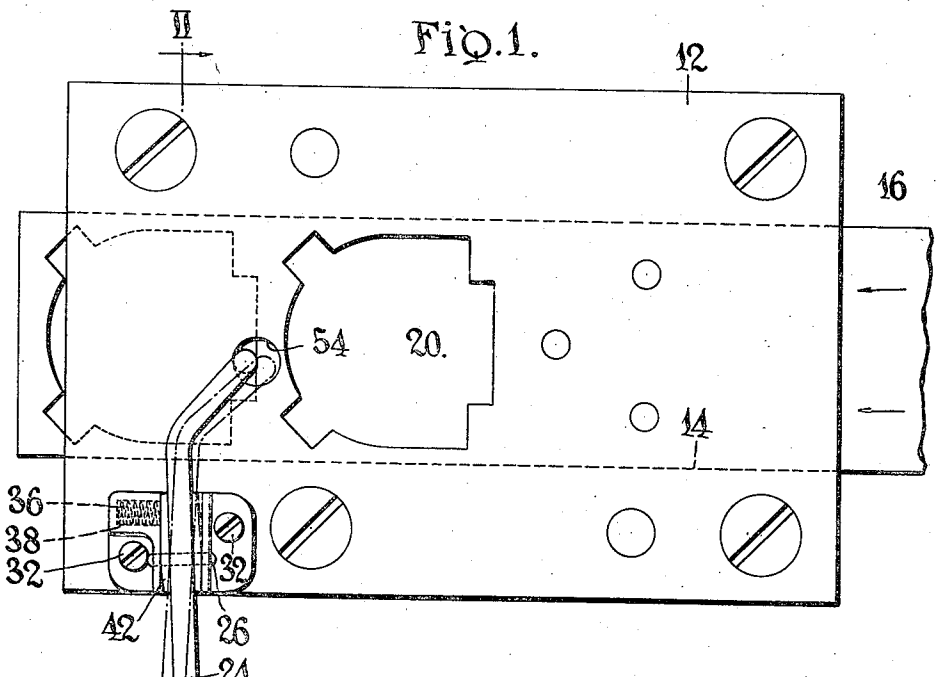

Fig. 3.

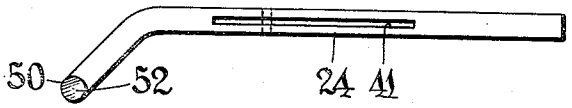

Fig. 2.

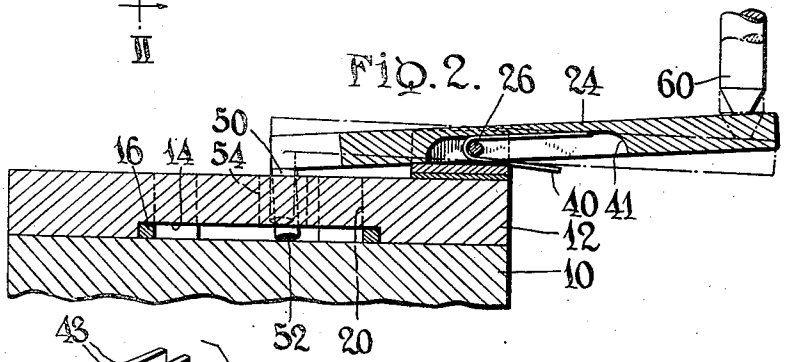

Fig. 4.

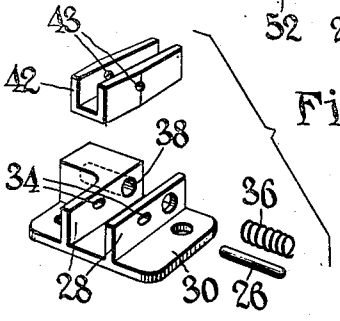

INVENTOR
Raymond C. West,
BY
Beau, Brooks, Buckley & Beau.
ATTORNEYS

Patented Oct. 22, 1940 2,219,060

UNITED STATES PATENT OFFICE

2,219,060

AUTOMATIC WORK STOP

Raymond C. West, Kenmore, N. Y.

Application March 15, 1940, Serial No. 324,172

2 Claims. (Cl. 164—59)

This invention relates to automatic mechanisms for regulating the operation of stamping, punching and/or die mechanisms, and/or other feed control devices, and more particularly has reference to devices to stop and position the stock material being processed during movement thereof through such mechanisms preparatory to successive punching or stamping operations.

The primary object of the invention is to provide an improved and simplified mechanism for the purpose described, and more specific objects and advantages of the invention will appear from the specification herein.

In the drawing:

Fig. 1 is an elevation of a progressive perforating and blanking die employing the invention;

Fig. 2 is a fragmentary section taken substantially along line II—II of Fig. 1;

Fig. 3 is a rear elevation of a portion of the stop mechanism of the invention of Figs. 1 and 2; and

Fig. 4 is a disassembled perspective of other portions of the stop mechanism thereof.

In the drawing, 10 designates the die block upon which is mounted a stripper plate 12, in conventional manner. The stripper plate 12 is formed at its inner face with the usual stock guiding channel as at 14, and a strip of sheet metal stock 16 is illustrated as being slidably mounted therein. The die block 10 and the stripper plate 12 are provided with in-line openings 20 to receive the die punch (not shown) in conventional manner, and it is contemplated that the stock plate 16 will be caused to move through the blanking mechanism in the direction of the arrows thereon and from right to left as viewed in Fig. 1 under the urge of some suitable manual or mechanical operating force so that successive unprocessed portions of the stock blank will be presented to the blanking punch at the opening 20 preparatory to successive punching operations. Thus, as illustrated in Fig. 1, the stock plate will first be punched at the opening 20 and then when the punch is withdrawn therefrom the stock will be moved toward the left to a position where the opening previously punched out of the stock is in the broken line position, and the stock is then prepared for a second punching operation.

To control the movements of the stock through the blanking mechanism in the above described manner, and to stop the feeding movement of the stock between successive blanking operations and to properly position the stock preparatory thereto, a novel form of stop mechanism is provided. The stop mechanism comprises generally a lever 24 which is mounted upon the stripper plate 12 by means of a pivot pin 26. The pin 26 is rigidly mounted upon the lever 24 and has opposite end portions which extend laterally therefrom into engagement with opposed lateral ear portions 28 of a base plate 30 which is fixedly mounted upon the stripper plate 12 by means of screws 32. The pin 26 engages the ears 28 by being inserted in openings 34 therethrough; the openings 34 being elongated in directions parallel to the plane of the base plate 30 but otherwise fitting the pin 26. Thus, the lever 24 is adapted to pivot upon the pin mounting in planes normal to the general plane of the stripper plate 12, and at the same time it is free to oscillate upon the pin mountings in directions substantially parallel to the plane of the stripper plate due to the elongated shape of the openings 34. A coil spring 36 is mounted in a recess 38 in a portion of the base plate 30 and is so arranged as to press at one of its ends against a rigid portion of the base plate structure and at the other of its ends to operatively engage with the lever 24 at a position spaced from the pivot pin 26. Thus the spring 36 resiliently urges and normally maintains the upper end of the lever 24 (as viewed in Fig. 1) to the right and in the position shown therein by means of broken lines. Another spring 40 having an intermediate coiled portion and opposite end leg portions extending therefrom is mounted upon the pin 26 at its coiled section and arranged in such manner thereon that the opposed leg portions operate to resiliently urge the upper end portion of the lever 24 inwardly towards the stripper plate 12 and into the position shown by solid lines in Fig. 2. To accommodate the spring 40 a slot 41 is provided in the lever 24 as shown in the drawing.

A guide plate 42 of channel form is mounted upon the lever 24 in the region of the pivot pin 26 and slidably fits the lever so that the lever is free to rotate therein in directions normal to the plane of the stripper plate. The guide plate 42, however, moves with the lever 24 during oscillative movements of the latter in directions substantially parallel to the plane of the stripper plate, and for this purpose the side walls of the guide plate 42 are tapered inwardly toward both ends thereof from the position of the pivot pin 26 and are formed with openings 43 to accommodate the pin 26 therethrough. The parallel ears are spaced apart a distance sufficient to accommodate the width of the lever and guide plate assembly at the point of its greatest width in the region of the pin 26.

The upper end of the lever **24** is provided with a laterally bent finger portion **50** which is formed at its extreme end with a face **52** inclined at an angle to the longitudinal axis of the finger portion, and the stripper plate **12** is perforated as at **54** to accommodate the finger **50** and to permit the latter to extend through the stripper plate and into engagement with the stock during operation of the mechanism.

In operation, the stock is first fed into the channel **14** and into position under the die punch. The initial blanking operation is then performed by movement of the punch through the openings **20** and through the stock in the manner of conventional blanking practice. Upon withdrawal of the punch after this blanking operation the stock is next shifted to the left as viewed in Fig. 1 in preparation for the next succeeding blanking operation. Prior to this time the end of the finger **50** of the lever **24** has been riding upon the stock piece, as illustrated in broken lines in Fig. 2, but as the stock piece approaches the succeeding blanking position the opening blanked out of the stock piece by the preceding stamping operation moves into registry with the finger **50** and thereupon the finger **50** moves into the stock opening under the urge of the spring **40** and into the position shown in solid lines in Fig. 2. Subsequently, as the stock piece approaches the position for the succeeding blanking operation the finger **50** comes into contact with the stock piece at the right hand wall portion of the previously blanked out opening and thereby impedes the progress of the stock. However, due to the elasticity of the spring **36**, the impetus of the stock piece **16** carries the finger **50** slightly to the left against the action of the spring **36**, as to the solid line position of the lever **24** illustrated in Fig. 1, at which time the stock moving force is completely overcome by contact between the finger **50** and the wall of the stripper plate at the left side of the opening **54**, and hence the movement of the stock piece ceases. The parts are so proportioned and relatively arranged that at this time the stock piece is in proper position for the next succeeding blanking operation, and the punch operating mechanism is then automatically brought into play and the punch moves through the openings **20** to repeat the blanking operation.

A stop release member **60** is provided in operative connection with the punch actuating mechanism and is so arranged as to normally avoid interference with movements of the stop lever **24** as explained hereinabove; but the stop release member **60** is so located adjacent the lower end of the lever **24** and operatively connected with the punch actuating mechanism as to be periodically pressed against the lower end of the lever **24** in a direction normal to the plane of the stripper plate so as to pivot the lever **24** about the longitudinal axis of the pin **26** and to withdraw the finger **50** from the blanked out openings formed in the stock by preceding successive blanking operations as explained hereinabove. This actuation of the lever **24** by the release member **60** is caused to be performed periodically during each blanking operation, and the operating elements are so proportioned and arranged as to provide for withdrawal of the finger **50** from the stock openings while the punch member is engaged with the stock during some portion of each corresponding blanking operation. Upon such release of the finger **50** from the stock piece the force of the spring **36** moves the finger **50** to the right as viewed in Fig. 1 to the broken line position shown therein wherein the end face **52** of the finger **50** is again riding upon the outer face of the stock piece. The stop release member **60** is then withdrawn from the broken line position thereof as shown in Fig. 2 toward the solid line position thereof so that upon subsequent completion of the blanking operation and further movement of the stock piece toward the next succeeding blanking position the finger **50** will be free to move inwardly into operative association with the stock piece opening as explained hereinabove, and the process repeated.

It will be seen that the opening **54** in the masking plate **12** is of such form and dimensions to enable the finger **50** to move from left to right as explained hereinabove for the desired distance of lateral movement of the finger, and it will also be seen that the angularity of the end face **52** of the finger **50** enables the finger **50** to firmly engage the stock piece during stock movement stopping operations in an improved manner and without danger of accidental forcing of the finger out of engagement with the stock piece. It will also be understood that the movement of the lever **24** relative to the stripper plate **12** is essentially a swivelling type of movement, and therefore other forms of swivelling type connections between the lever **24** and the stripper plate **12** may be employed within the concept of the invention in combination with the other features thereof. For example, the mounting connection of the lever **24** upon the stripper plate might be provided by means of a ball and socket type bearing wherein the required simultaneous oscillative movements of the lever in transverse planes will be provided for.

The guide plate **42** enables the lever **24** and the spring **36** to function in improved fashion; each being free to operate in normal manner regardless of the position and attitude of the other. Since the spring **36** bears directly against the guide plate **42** instead of against lever **24** there is no urge for the spring **36** to follow the transverse movements of the lever in directions at right angles to the stripper plate and therefore the spring is not axially distorted during such movements of the lever and the spring offers no resistance to such movements. Consequently the device is of simple and rugged form and the movements of the lever and of the spring **36** are smooth and free from interferences; and the device is capable of improved performance as compared to prior types of work stop devices.

Although only one form of the invention has been shown and described in detail herein, it will be understood by those skilled in the art that various changes may be made therein without departing from the spirit of the invention or the scope of the following claims.

I claim:

1. In combination, a punch and die mechanism having punch actuating means and a stripper plate slidably engaging a sheet of stock material, an automatic work stop device comprising essentially a pivot plate mounted upon said stripper plate and having a pair of parallel projecting ears extending in planes substantially normal to the direction of movement of said stock material through said mechanism, said ears being intermediately slotted in directions parallel to said stripper plate, a lever having an intermediate portion transversely bored and disposed between said ears, a lever mounting pin fitted rigidly into said lever bored portion and having opposite end portions extending therefrom into mounting en-

gagement within said ear slotted portions, said pin and said slotted portions being so formed as to allow said lever to freely pivot upon said pivot plate with oscillative movements in planes substantially normal to the direction of movement of said stock material through said mechanism and also in planes substantially parallel thereto, a guide plate of substantially U-shaped sectional form having side wall portions slidably embracing the side wall faces of said lever in the region of said mounting pin and pivotally mounted thereon, said lever being slotted in the region of said pin and having a rigidly integral finger portion thereof extending through an opening in said stripper plate, a spring member comprising an intermediate coiled portion and opposed straight extending end portions, said spring member being disposed substantially within said lever at the slotted portion thereof and mounted at its coiled portion upon said pin and having one of its extending end portions pressing against said stripper plate and the other of its ends pressing against said lever at a position spaced from said pivot pin and so arranged as to resiliently urge said finger portion into engagement with said stock material, a second spring member bearing at one of its ends upon said pivot plate and at the other of its ends against said guide plate at a position spaced from said pivot pin and adapted to resiliently urge said lever at said finger portion thereof in a direction opposite to the direction of movement of said stock material through said mechanisms, said opening in said stripper plate being of such form and dimension as to allow said finger portion of said lever to oscillate in directions substantially parallel to the direction of movement of said stock material against the action of said second spring member, and an abutment element operatively connected with said punch actuating means of said mechanism and adapted for operating engagement with said lever at a position spaced from said pin during an active stroke of the punch actuating mechanisms to withdraw said lever finger portion from engagement with said stock material.

2. In combination, a punch and die mechanism having punch actuating means and a stripper plate slidably engaging a sheet of stock material, an automatic work stop device comprising essentially a pivot plate mounted upon said stripper plate and having a pair of parallel projecting ears extending in planes substantially normal to the direction of movement of said stock material through said mechanism, said ears being intermediately slotted in directions parallel to said stripper plate, a lever having an intermediate portion transversely bored and disposed between said ears, a lever mounting pin fitted rigidly into said lever bored portion and having opposite end portions extending therefrom into mounting engagement within said ear slotted portions, said pin and said slotted portions being so formed as to allow said lever to freely pivot upon said pivot plate with oscillative movements in planes substantially normal to the direction of movement of said stock material through said mechanism and also in planes substantially parallel thereto, a guide plate of substantially U-shaped sectional form having side wall portions slidably embracing the side wall faces of said lever in the region of said mounting pin and pivotally mounted thereon, the outer face portions of said guide plate side wall portions being inclined inwardly toward said lever from the region of said pin toward the ends of said side wall portions so as to permit said guide plate to oscillate between said ears in a plane transverse thereto, said lever having a rigidly integral finger portion thereof normally extending into engagement with said stock material, a spring member operatively associated with said lever in such manner as to resiliently urge the latter to move in directions transverse of the plane of said stock material at said finger portion thereof, a second spring operatively associated with said guide plate in such manner as to resiliently urge the latter to oscillate said lever in directions substantially parallel to the plane of said stock material and to move said lever finger portion in a direction opposite to that of the normal movement of said stock material through said mechanism, and an abutment element operatively connected with said punch actuating means of said mechanism and adapted for operating engagement with said lever at a position spaced from said pin during an active stroke of the punch actuating mechanism to withdraw said lever finger portion from engagement with said stock material.

RAYMOND C. WEST.