(No Model.)

3 Sheets—Sheet 1.

G. E. DOW.

COMPOUND STEAM ENGINE.

No. 330,388. Patented Nov. 17, 1885.

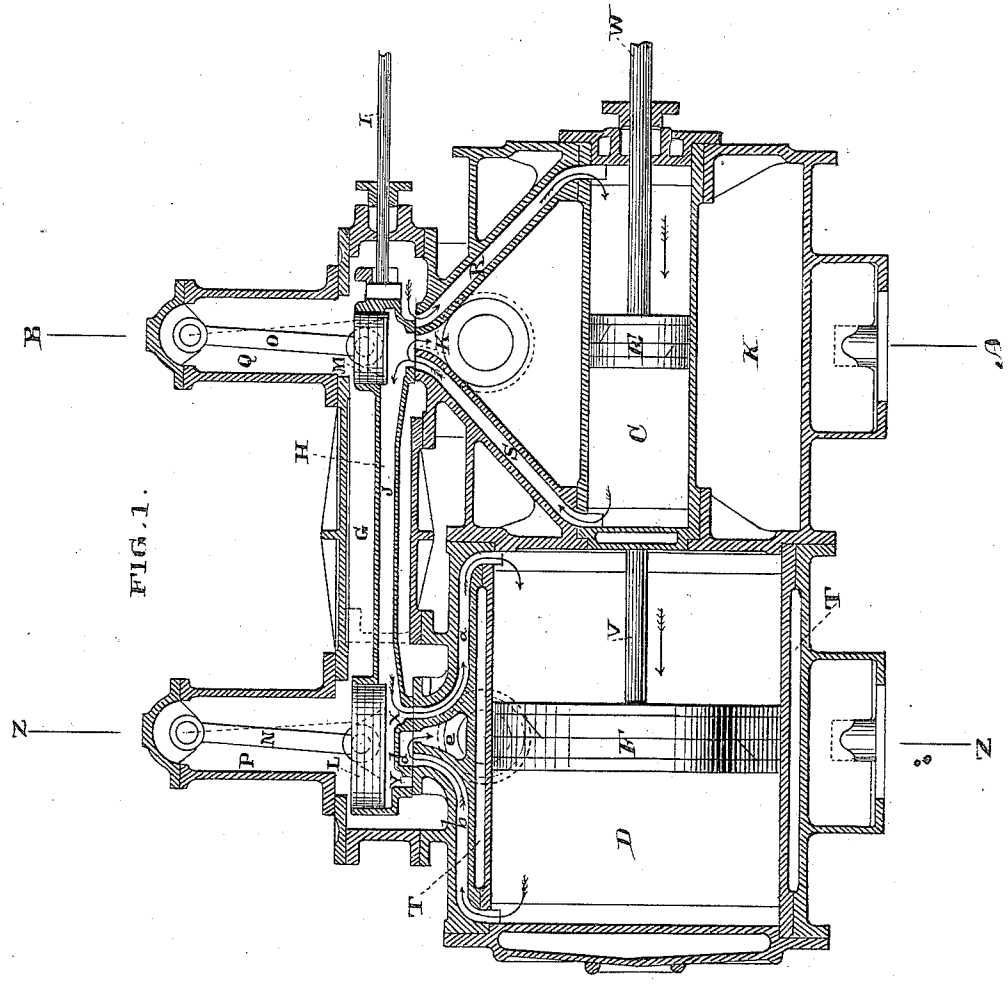

FIG. 1.

Witnesses,
Geo. H. Strong.
J. B. Towne.

Inventor,
Geo E. Dow.
By Dewey & Co.
Attorneys

N. PETERS. Photo-Lithographer. Washington, D. C.

(No Model.) 3 Sheets—Sheet 2.

G. E. DOW.

COMPOUND STEAM ENGINE.

No. 330,388. Patented Nov. 17, 1885.

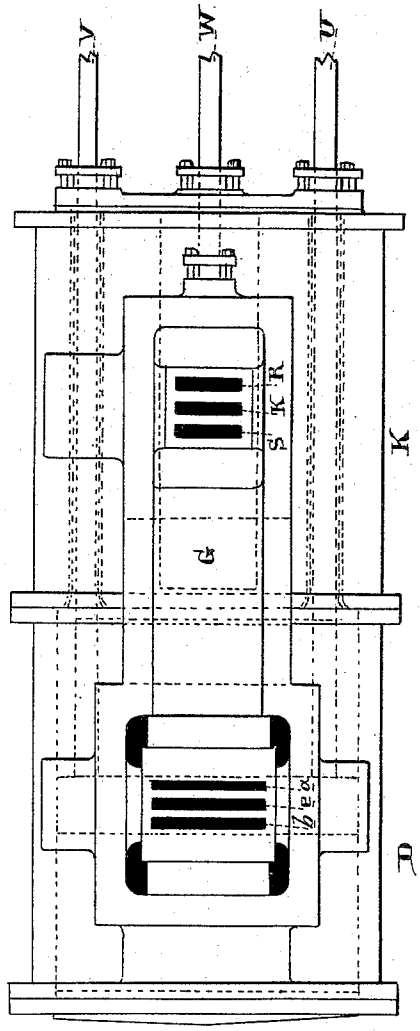

FIG. 2.

Witnesses,
Geo. H. Strong.
J. L. Crouse.

Inventor
Geo. E. Dow
By
Dewey & Co.
Attorneys

N. PETERS. Photo-Lithographer. Washington, D. C.

(No Model.) 3 Sheets—Sheet 3.

G. E. DOW.

COMPOUND STEAM ENGINE.

No. 330,388. Patented Nov. 17, 1885.

FIG. 4.

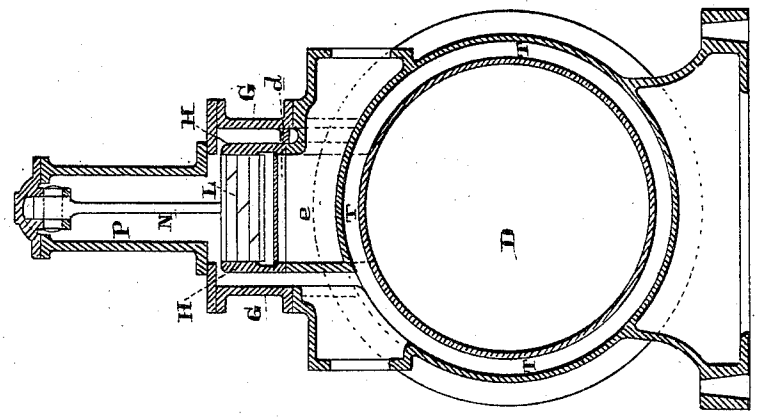

FIG. 3.

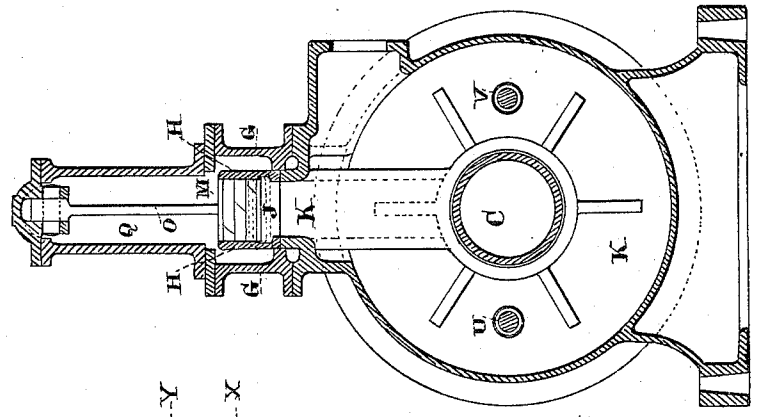

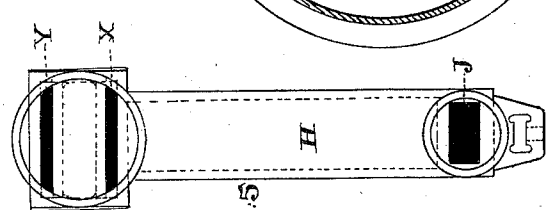

FIG. 5

Witnesses,
Geo. H. Strong.
J. H. Nourse.

Inventor
Geo E. Dow
By
Dewey & Co
Attorneys

N. PETERS. Photo-Lithographer, Washington, D. C.

UNITED STATES PATENT OFFICE.

GEORGE E. DOW, OF SAN FRANCISCO, CALIFORNIA.

COMPOUND STEAM-ENGINE.

SPECIFICATION forming part of Letters Patent No. 330,338, dated November 17, 1885.

Application filed August 7, 1885. Serial No. 173,874. (No model.)

To all whom it may concern:

Be it known that I, GEORGE E. DOW, of the city and county of San Francisco, State of California, have invented an Improvement in Compound Steam-Engines; and I hereby declare the following to be a full, clear, and exact description of the same.

My invention relates to improvements in compound steam-engines, and is particularly applicable to that class having two or more cylinders of unequal diameters placed with their axes in line, and with the pistons connected to one cross-head, or other suitable means for causing their coincident reciprocation in parallel lines, steam being supplied from the boiler to the first or smaller cylinder, from which it is allowed to expand, exerting its final force upon the pistons of the larger or remaining cylinders.

The object of my improvements is to provide means for a better distribution of the steam than heretofore used in operating engines of this class, and by which construction great benefits are derived.

In direct-acting engines of the above-mentioned class not employing a receiver in which to expand the steam in its passage from the high to the low pressure cylinder a great disturbance of the acting force of the engine is produced by expanding high-pressure steam from the first cylinder direct to the low-pressure cylinder, causing a sudden jump of the engine at the commencement of the stroke, or disastrous strains brought upon the connections. To overcome this difficulty, two plans have been resorted to. The first and most common is to make less difference in the relative areas of the cylinders, a less ratio of expansion, and in some cases a throttling or wire-drawing device is employed in conducting the steam to the low-pressure cylinder. The effect of this is to limit the possibilities of economy in the consumption of steam by a fixed low rate of expansion or by wire-drawing the steam, with its equally limited results. The second plan is to conduct the exhaust-steam from the high-pressure cylinder into a separate receiver or chamber of sufficient capacity to nearly equalize the intermediate pressure, from which it is conducted to the steam-chest of the low-pressure cylinder, giving a steady and uniform force to the engine, dispensing with all intermediate throttling devices, causing no limit to the desirable higher ratios of expansion and consequent economy thereof by the construction of the engine, as is the case with the first-mentioned plan.

In my engine a receiver is shown surrounding the high-pressure cylinder and connected to the intermediate passage of the valve used for the distribution of the steam. This arrangement embodies all the advantages attributed to the second plan referred to, with the addition of increasing the economy of the engine still further by dispensing with the pipes and conduits for the transmission of steam to and from a separate receiver, which usually cause the loss of heat and efficiency by impact and surface conduction, the loss forming a large percentage of the advantage due to the higher ratios of expansion, but not otherwise realized. Live steam from the boiler may be admitted directly to the receiver or the connecting-passage of the valve for use at such times as starting up when cold, accelerating the power of the engine in an emergency by using direct steam (non-compound) upon the larger area of the low-pressure piston, in which case the small area of the high-pressure piston is in equilibrium of pressure, exerting no power.

For a description in detail of my invention, reference will be made to the accompanying drawings, of which—

Figure 1 is a vertical longitudinal section of a compound engine of my construction, showing in the present case one high and one low pressure cylinder operated by a flat slide-valve, with means for partially balancing or relieving the excess of pressure upon the same, and constructed to perform the duties devolved in the arrangement of this engine; also an intermediate steam-receiving chamber in direct communication with the passage through the valve. Fig. 2 is a plan or top view showing the engine steam-chest, cover and valve removed. Fig. 3 is a transverse section through A B, Fig. 1. Fig. 4 is a transverse section through Z Z, Fig. 1. Fig. 5 is a plan or top view of valve, relief-pistons being removed.

Referring to said figures, it is to be understood that the engine here shown as embodying the invention constitutes a "direct-act-

ing" compound steam-engine adapted to operating pumps, the rods or plungers of which may be connected directly to the reciprocating parts, where no fly-wheel or other heavy moving body is employed to distribute and equalize the forces. The valve of this engine can be operated by means of well-known devices suitable for other direct-acting engines.

It may be observed that to apply this invention to an engine of rotative construction, where a crank and fly-wheel are employed, the valve may be operated by an eccentric on the shaft in the usual manner of steam-engines. The intermediate steam-receiving chamber may be removed entirely or reduced in size, maintaining no more than a passage to the port, providing for the use of live steam, when desired, direct to the low-pressure piston.

To describe this apparatus in detail, the two cylinders C and D are of unequal diameters, and have pistons E and F, which may be connected to work on one cross-head, or in any suitable manner provided for a coincident movement, so that the two pistons may be at all times in a corresponding position in their cylinders. A steam-chest, G, extends partially over both cylinders, and contains a main steam-valve, H, having an actuating-rod, I, extending through a stuffing-box, by which rod the engine is operated. The valve H has a single continuous passage, J, through it, the same being in constant communication with the receiver-passage K, and it serves to actuate both the high and low pressure pistons E and F. The valve H is provided with upwardly-extended cylindrical chambers, into which are fitted relief-pistons L and M, suspended upon links N and O, vibrating within the chambers P and Q. The high-pressure cylinder C, contained within the receiver K, has ports R and S, through which live steam from the chest G is admitted alternately to operate the piston E. The exhaust or partially-expanded steam from this cylinder is permitted to escape into the receiver K and the low-pressure cylinder D jointly through the cavity and passage J of the valve H. The low-pressure cylinder D, surrounded by a steam-jacket space, T, contains piston F, having two rods, U and V, extending through sleeves and stuffing-boxes in the receiver K and passing out on either side of the high-pressure cylinder C. The rods U and V and the rod W of the high-pressure piston may be united by means of a cross-head, (not shown,) and by which a pump or other load may be driven. The ports X and Y of the valve H communicate with the high-pressure exhaust and receiving chamber K by means of passage J, and are so arranged as to alternately admit the partially-expanded steam from the first cylinder through ports *a* and *b* to actuate the low-pressure piston F at the same time the high-pressure cylinder is receiving steam from the boiler. Exhaust-cavity *d* of valve H coincides with passage *e* to conduct the exhaust-steam from the low-pressure cylinder D to a condenser or the atmosphere in the usual manner of steam-engines.

The operation of the engine is as follows: Assuming the engine to be in motion and the high-pressure piston E, together with the low-pressure piston F, moving in the direction of the arrows, live steam will be admitted from the chest G through port R to the acting side of piston E, the opposite side of which is in communication with piston F by means of port S, valve-passage J, which is in communication with receiver K and ports X and *a*, conducting thereby to the low-pressure cylinder the steam used during the previous stroke in high-pressure cylinder. The steam, after having done a part of its work in the first cylinder, is thus conducted to the low-pressure cylinder through the valve in the chest, which is surrounded by live steam of a high temperature, and by which means heat is supplied to the expanding steam on its way to the low-pressure cylinder. The expansive power of the steam is improved materially by this means, effecting the economy of the engine thereby, and permitting, in an engine of this construction, improved results as a much higher ratio of expansion can be employed.

The intermediate steam-receiving chamber, K, which is in constant communication with passage J of the valve, is important in equalizing the initial and terminal pressure of the steam actuating the low-pressure piston when operating as a direct-acting engine, and particularly with a high rate of expansion, tending to apply the power in a nearly uniform manner throughout the entire length of the stroke, the receiver taking up at the commencement of the stroke a surplus of power from the high-pressure exhaust, which it in turn gives off again as the pistons proceed to the termination of the stroke. The final exhaust from the low-pressure or expansion cylinder D is effected by the port *b*, valve-cavity *d*, and passage *e*, in the usual manner of steam-engines.

The relief-pistons L and M have live steam pressing on their upper sides by being exposed within the steam-chest G, the lower faces of which extend within the valve passage or cavities, so that the valve is pressed down to its seat by the much lower pressure of the steam maintained in the receiver or acting upon the low-pressure cylinder. Therefore, though this valve is operated within the chest G, surrounded with high-pressure steam, the pressure on the valve holding the same to the seat is reduced about in proportion to the ratio of expansion employed, and consequently the frictional resistance to operating the valve is reduced in like proportion. These pistons vibrate slightly within the arc of a circle as the valve is moved, sliding upon the valve-seat. Any slight leakage of steam that may occur through the rings of these relief-pistons will represent no loss practically, as such steam is available for use in the secondary cylinder.

It will readily be seen that the construction of this engine is simple and not liable to derangement or excessive wear; that the parts are all accessible for convenience of examination or repairs when such are needed, also the distribution of the steam is by means of one valve and with a single passage only through the same to operate the pistons of both high and low pressure cylinders, with means for operating in conjunction an intermediate steam-receiving chamber, or when said chamber is not needed, facilitating by the same means an independent live-steam connection for use, when desired, to operate the low-pressure piston direct. The low-pressure steam is conducted to the piston of the secondary cylinder in a dry and superheated condition and loses none of its heat by coming in contact with the colder walls of a series of pipes and conduits, as is the case in engines of the ordinary compound type when separate steam-heaters to pass the steam through are not employed.

The arrangement of this apparatus is not confined to this particular construction, as many modifications well known to the art may be employed in substitution without changing the spirit of the arrangement or its results, or departing from the invention.

Having thus described my invention, what I claim as new, and desire to secure by Letters Patent, is—

1. In an engine, the high and low pressure cylinders with pistons, piston-rods, common valve-chamber having ports in its ends corresponding with those in the cylinders, and the double-ended valve, as shown, in combination with the balance-pistons fitting vertical chambers in each end of the valve, above the ports, and links by which the pistons are suspended from points above the valve, substantially as herein described.

2. In an engine, high and low pressure cylinders with pistons, piston-rods, common valve-chamber having ports in its ends corresponding with those in the cylinders, and the double-ended valve, as shown, in combination with the balance-pistons fitting vertical chambers in each end of the valve, above the ports, and links by which the pistons are suspended from points above the valve, substantially as herein described.

In witness whereof I have hereunto set my hand.

GEORGE E. DOW.

Witnesses:
S. H. NOURSE,
H. C. LEE.