(No Model.)

M. J. ALTHOUSE.

WIND WHEEL.

No. 456,787. Patented July 28, 1891.

Fig. 1.

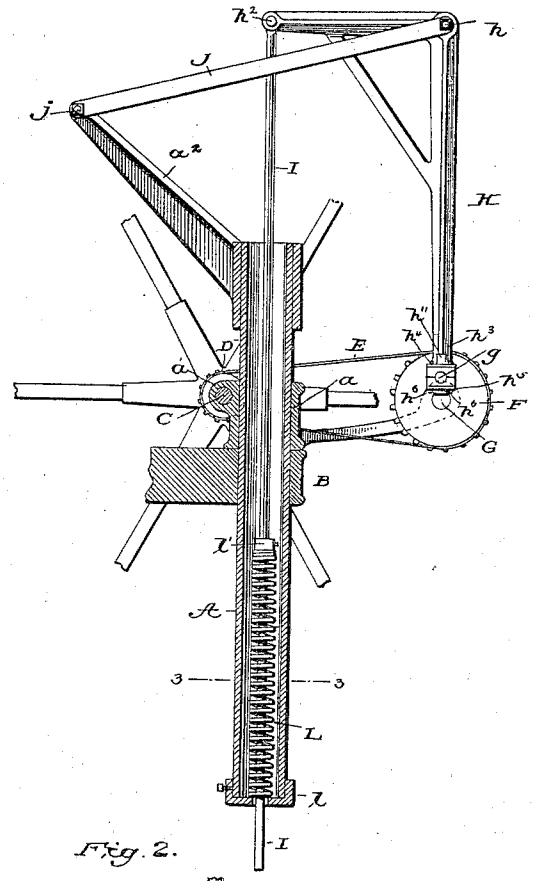

Fig. 3.
on line 3-3.

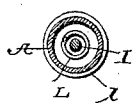

Fig. 2.

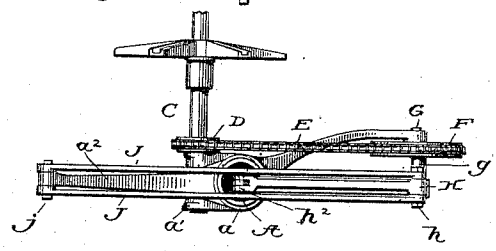

Witnesses:
W. W. Mortimer.
W. R. Kennedy

Inventor:
Milo J. Althouse
By Phil. T. Dodge
Atty

THE NORRIS PETERS CO., PHOTO-LITHO., WASHINGTON, D. C.

UNITED STATES PATENT OFFICE.

MILO J. ALTHOUSE, OF WAUPUN, WISCONSIN.

WIND-WHEEL.

SPECIFICATION forming part of Letters Patent No. 456,787, dated July 28, 1891.

Application filed July 23, 1890. Serial No. 359,609. (No model.)

To all whom it may concern:

Be it known that I, MILO J. ALTHOUSE, of Waupun, in the county of Fond du Lac and State of Wisconsin, have invented certain Improvements in Wind-Wheels, of which the following is a specification.

This invention has reference to that class of wind-wheels in which a crank and pitman are employed to operate a pump-rod, and more particularly to those mills in which the crank receives its motion from the main shaft through an intermediate chain and sprocket-wheels or through spur-gears. In this class of mills it is found that as the crank passes over the center at the top the weight of the rod and its connections causes the crank to turn suddenly ahead to the extent allowed by the backlash or lost motion between the parts. The result is a severe pounding or hammering of the parts during each stroke, followed by rapid wear and disorganization of the parts. My invention is designed to overcome this difficulty; and it consists in combining with the pump-rod, or its equivalent, a spring so applied as to exert a lifting action, or, in other words, to resist and prevent the gravitating motion of the rod, whereby a smooth and easy action is secured.

In the accompanying drawings, Figure 1 is a sectional elevation showing my improvement applied to a wind-wheel, the view being limited to those parts which are necessary to an understanding of the improvement. Fig. 2 is a top plan view of the same. Fig. 3 is a cross-section on the line 3 3 of Fig. 1.

Referring to the drawings, A represents a vertical tube provided with an encircling-collar a and supported in a turn-table B or other suitable support, on which the collar rests, so that the tube, which gives support to the wheel, may turn freely in a horizontal direction, as usual.

C represents the horizontal shaft of the wind-wheel sustained in the box or bearing a' on the side of the tube and provided with a sprocket-wheel D, connected by chain E with a second and larger sprocket-wheel F on one end of a horizontal shaft G, supported, as usual, in an arm extending outward from the tube.

H is an angular pitman having its lower end mounted on a crank-pin g on the wheel G and its upper end connected by a pivot h^2 to the upper end of the pump-rod I, which extends downward through the tube A. The pitman H is mounted midway of its length—that is to say, at its elbow—on a horizontal pivot h, carried in the outer ends of two radius-bars J, which are in turn mounted at their opposite ends on a pivot j at the upper end of an arm a^2, extending rigidly from the upper end of the tube. As the wheel F revolves, its crank-pin carries the pitman H bodily upward and downward, at the same time giving it a slight pivotal motion about the pin h^2, which latter is guided in a substantially vertical path by the ends of the radius-bars. The result of this compound motion imparted to the pitman is to cause it to carry the pump-rod I upward and downward in a substantially vertical line.

Within the tube A, I place a strong spiral spring L, which loosely encircles the pump-rod and which is seated at its lower end on a cap l, fastened to the lower end of the tube, while at the upper end it bears strongly beneath the collar l', fixed to the pump-rod. This spring is made of such length and applied under such tension that it will sustain the whole or practically the whole weight of the pump-rod and the connections at its upper end. It therefore serves to prevent these parts from suddenly falling as the crank G carries the pitman over the center. In the absence of the spring the chain would pull the crank-wheel F forward and exert a lifting action on the pitman until the instant when the crank passes the center. At this instant the weight of the rod and pitman, instead of longer resisting the forward motion of the crank-wheel, would, on the contrary, turn the same forward to the extent allowed by the play of the sprocket-teeth within the links of the chain, when such movement would be suddenly arrested with great shock and strain upon the operative parts. The spring or resistant applied on my plan entirely avoids this difficulty and enables the parts to run smoothly and without violent shocks or strains of any character. As the spring is depressed by the descent of the pitman it offers an in-

creasing resistance while adapted to neutralize the increasing momentum of the descending parts.

While I prefer to use the sprocket chain and wheels as a means of communicating motion from the wheel-shaft to the center shaft, it is manifest that said shafts, may be provided with pinions gearing into each other, as is commonly practiced at the present day. My improvement would apply with the same advantage to wheels thus geared.

It will be apparent to the skilled mechanic that the essence of my invention resides in the application of a spring to counteract the weight of the pump-rod and its connections, and that the details of the parts for communicating motion to the crank are not of the essence of the invention. It will also be obvious that the spring may be applied in any manner the equivalent of that herein shown—that is to say, in any manner which will cause it to exert a lifting action on the pump-rod and its operating pitman.

Having thus described my invention, what I claim is—

1. In combination with a wind-wheel shaft C, a crank F, intermediate gearing through which the crank receives motion from the shaft, a pump-rod sustained from the crank, and a spring adapted and arranged to sustain the weight of the rod and its connection, whereby the sudden advance of the parts as the crank passes over the center is prevented.

2. In a wind-wheel, the combination of the vertical tube, the pump-rod therein, the crank, the angular pitman sustained by the crank and in turn sustaining the rod, the radius-bars J, the compression-spring seated within the tube and adapted and arranged to carry the weight of the rod and attendant parts as the crank passes over the center, the sprocket wheels and chain for driving the crank, whereby the shifting of the chain to and fro on the wheels is prevented.

In testimony whereof I hereunto set my hand, this 7th day of July, 1890, in the presence of two attesting witnesses.

MILO J. ALTHOUSE.

Witnesses:
C. E. HOOKER,
R. L. OLIVER.