Dec. 21, 1965 A. V. SCOLLARD ETAL 3,224,580

EGG WEIGHING AND SORTING APPARATUS

Original Filed Feb. 14, 1961 49 Sheets-Sheet 1

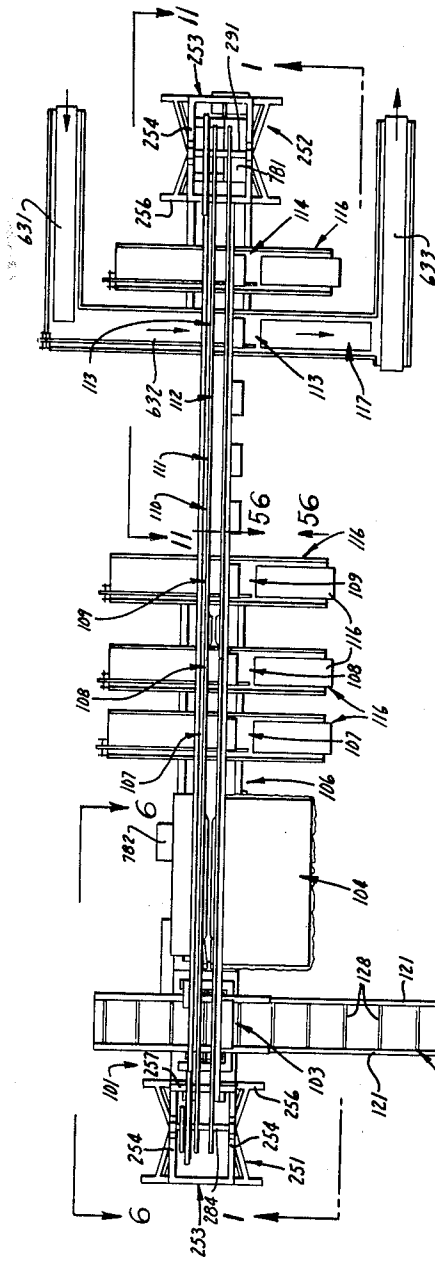

Fig. 2

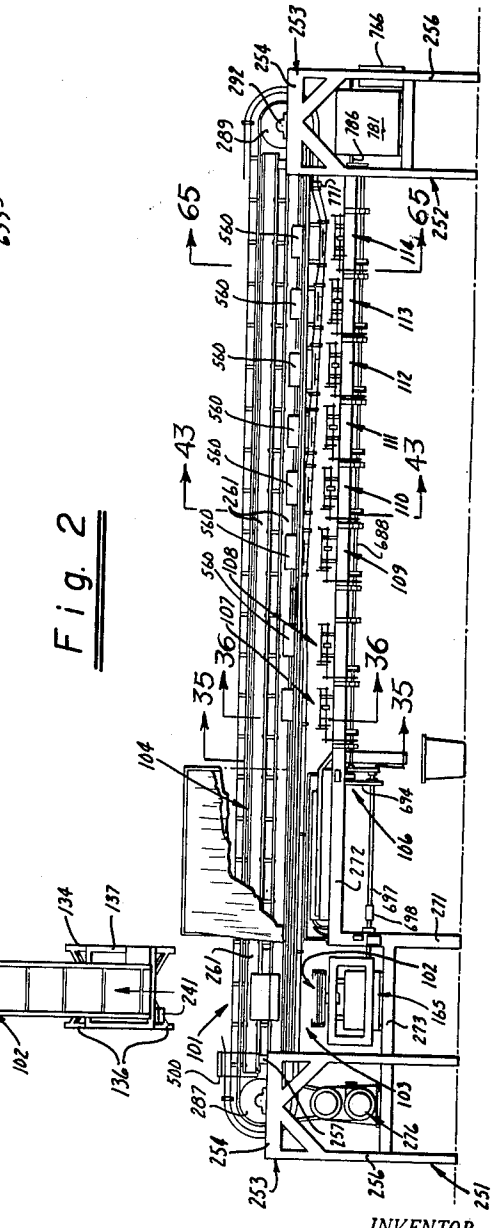

Fig. 1

INVENTOR.
Alvoid V. Scollard
BY Alfred E. Comstock
Flehr Hohbach Swain
Attorneys

Dec. 21, 1965 A. V. SCOLLARD ETAL 3,224,580

EGG WEIGHING AND SORTING APPARATUS

Original Filed Feb. 14, 1961

49 Sheets-Sheet 2

Fig. 3

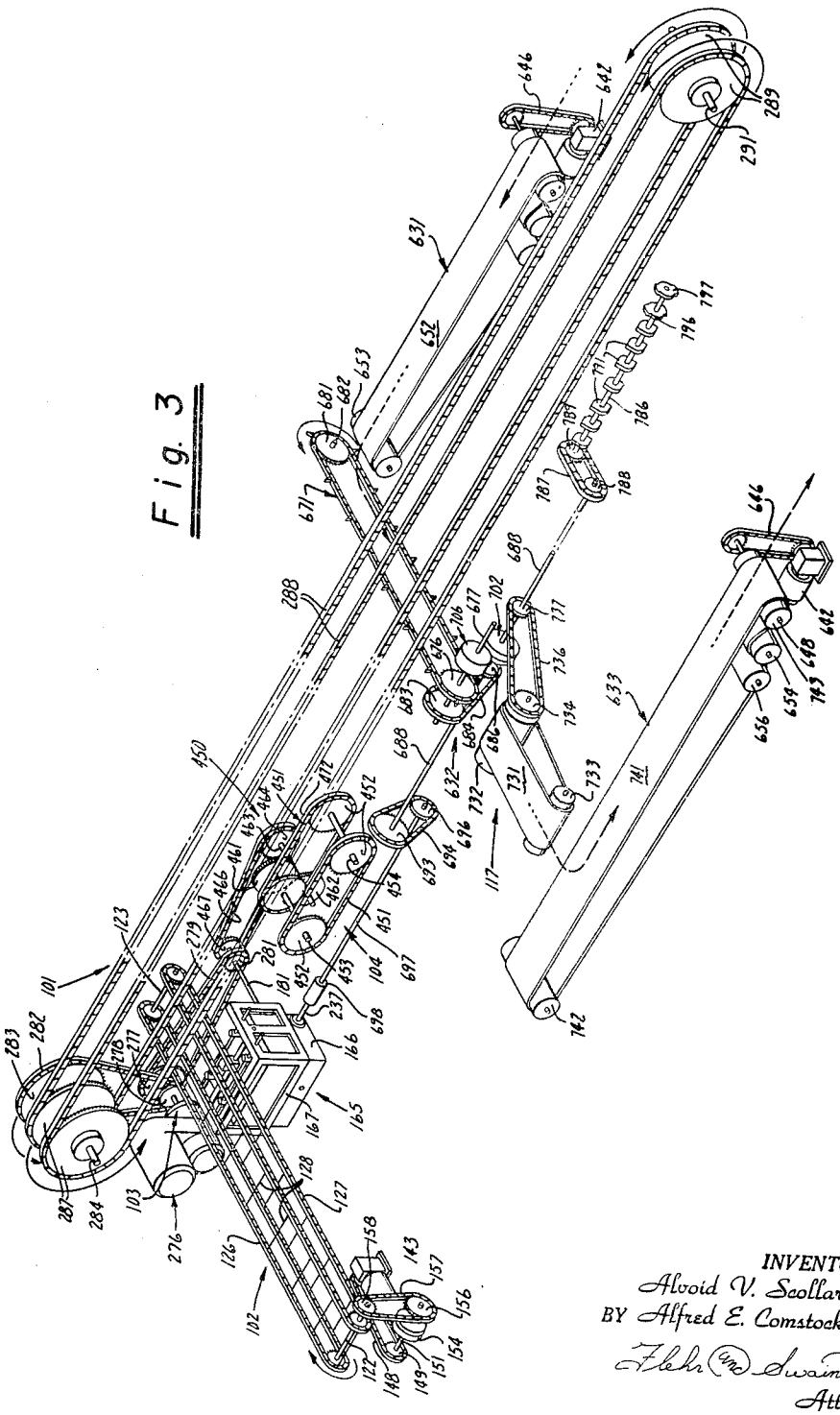

INVENTOR.
Alvoid V. Scollard
BY Alfred E. Comstock
Flehr (m) Swain
Attorneys

Dec. 21, 1965 A. V. SCOLLARD ETAL 3,224,580

EGG WEIGHING AND SORTING APPARATUS

Original Filed Feb. 14, 1961 49 Sheets-Sheet 3

Fig. 5

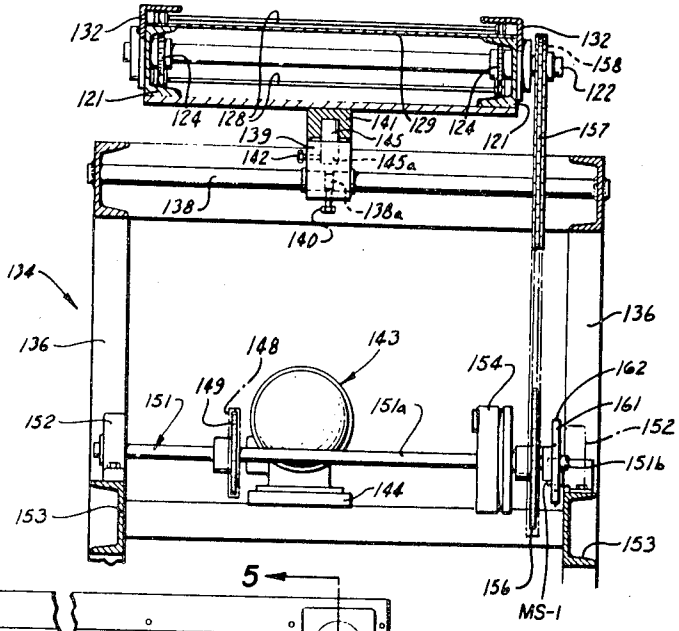

Fig. 4

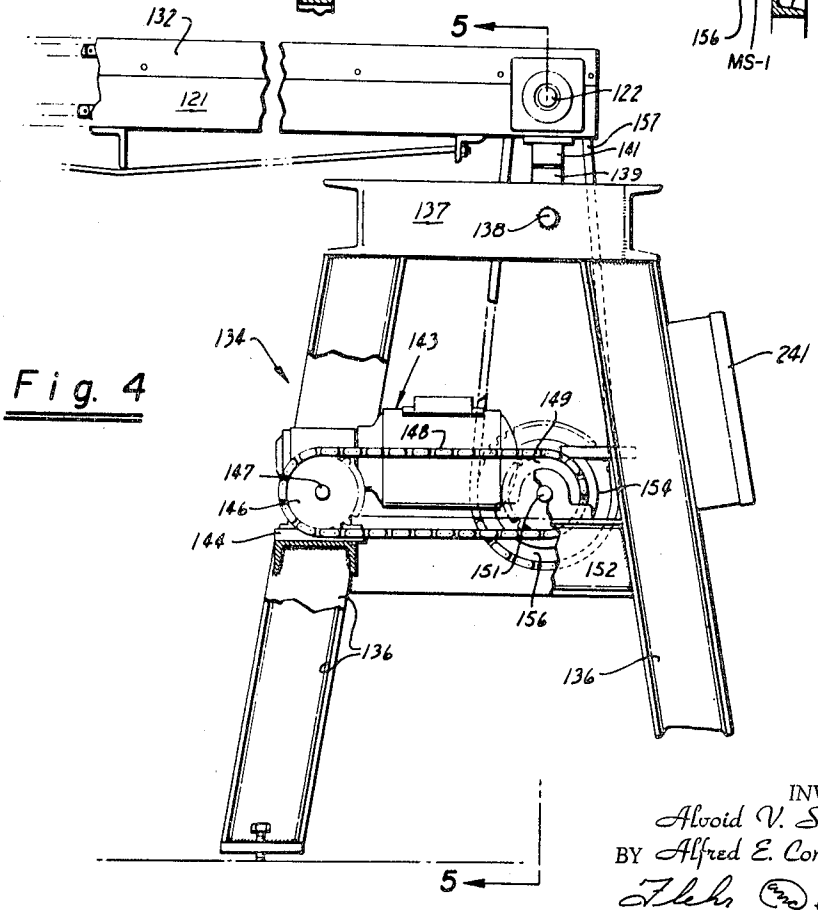

INVENTOR.
Alvoid V. Scollard
BY Alfred E. Comstock
Fleh & Swain
Attorneys

Dec. 21, 1965 A. V. SCOLLARD ETAL 3,224,580

EGG WEIGHING AND SORTING APPARATUS

Original Filed Feb. 14, 1961 49 Sheets-Sheet 4

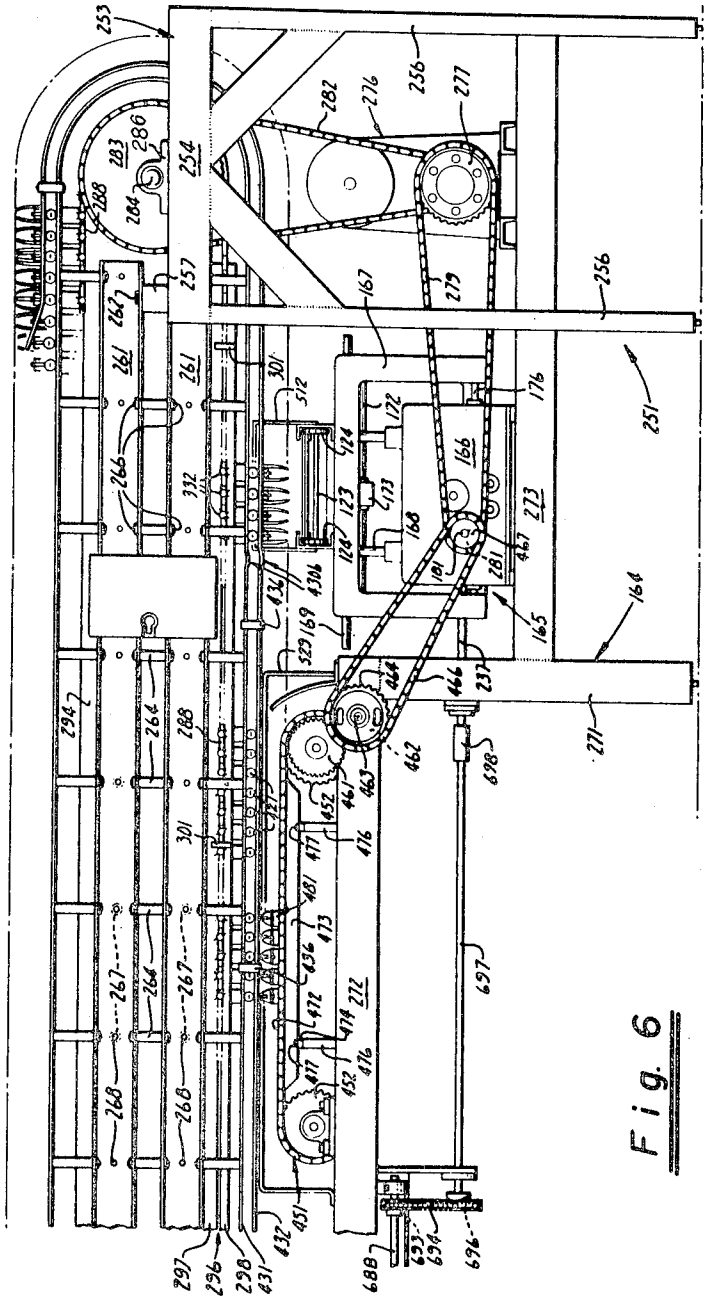

Fig. 6

INVENTOR.
Alvoid V. Scollard
BY Alfred E. Comstock
Flehr and Swain
Attorneys

Dec. 21, 1965 A. V. SCOLLARD ETAL 3,224,580

EGG WEIGHING AND SORTING APPARATUS

Original Filed Feb. 14, 1961 49 Sheets-Sheet 5

Fig. 7

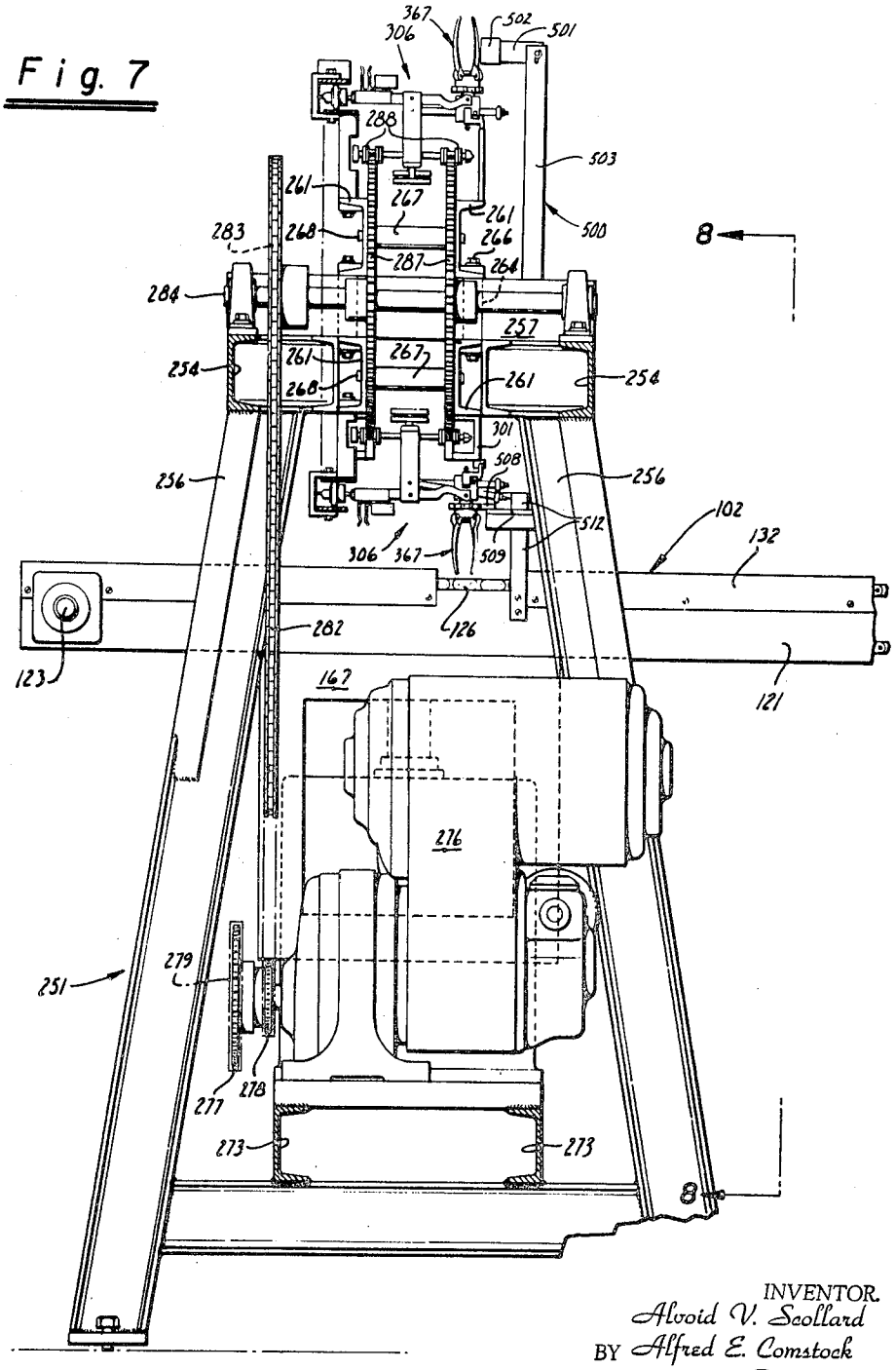

INVENTOR.
Alvoid V. Scollard
BY Alfred E. Comstock
Flehr and Swain
Attorneys

Dec. 21, 1965 A. V. SCOLLARD ETAL 3,224,580

EGG WEIGHING AND SORTING APPARATUS

Original Filed Feb. 14, 1961 49 Sheets-Sheet 6

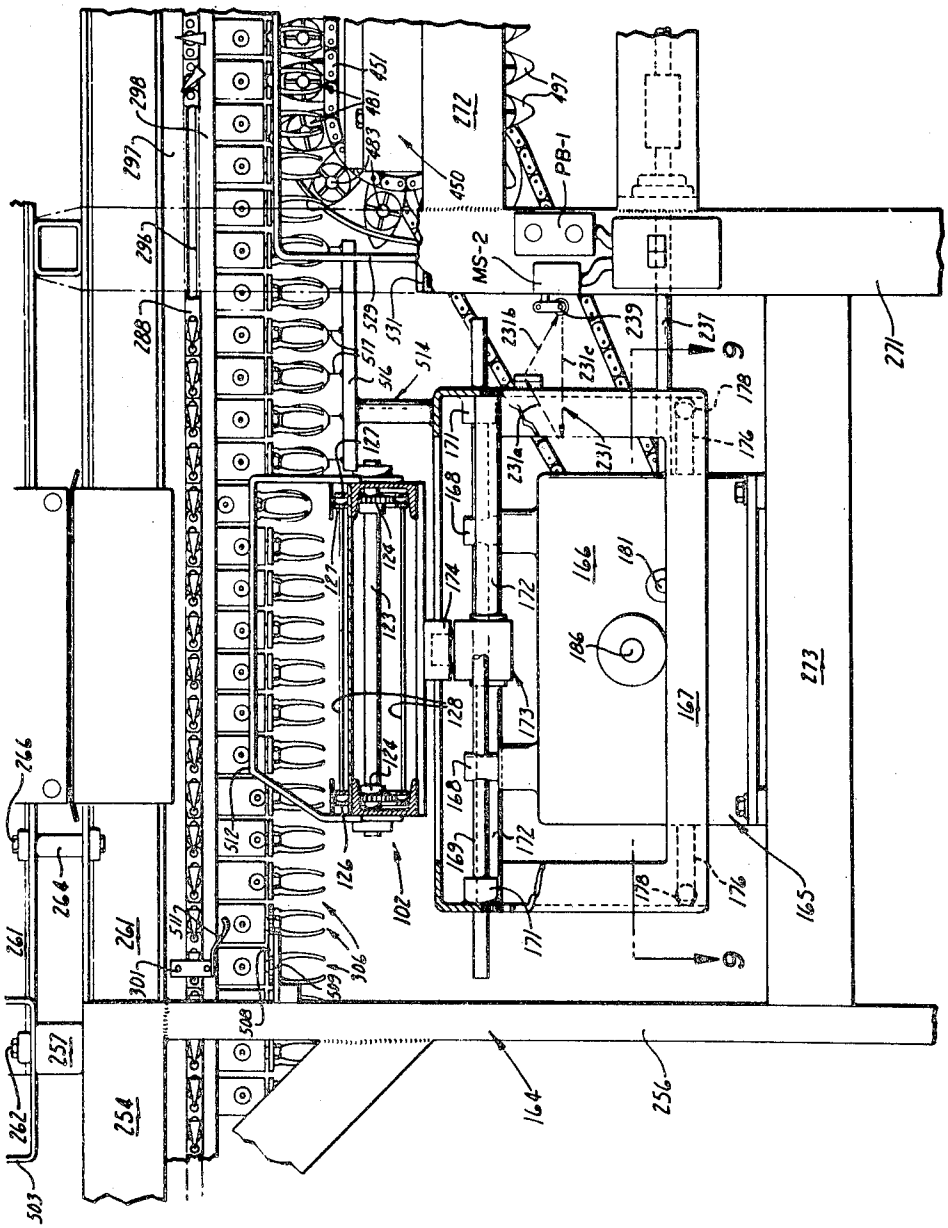

Fig. 8

INVENTOR.
Alvoid V. Scollard
BY Alfred E. Comstock
Fleks and Swain
Attorneys

Dec. 21, 1965 A. V. SCOLLARD ETAL 3,224,580

EGG WEIGHING AND SORTING APPARATUS

Original Filed Feb. 14, 1961 49 Sheets-Sheet 7

Fig. 9

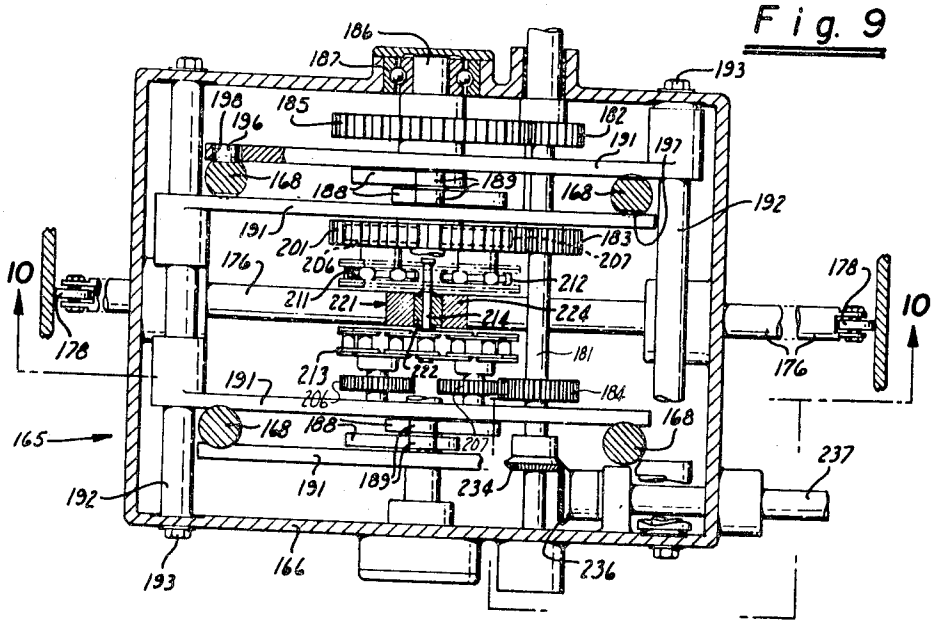

Fig. 10

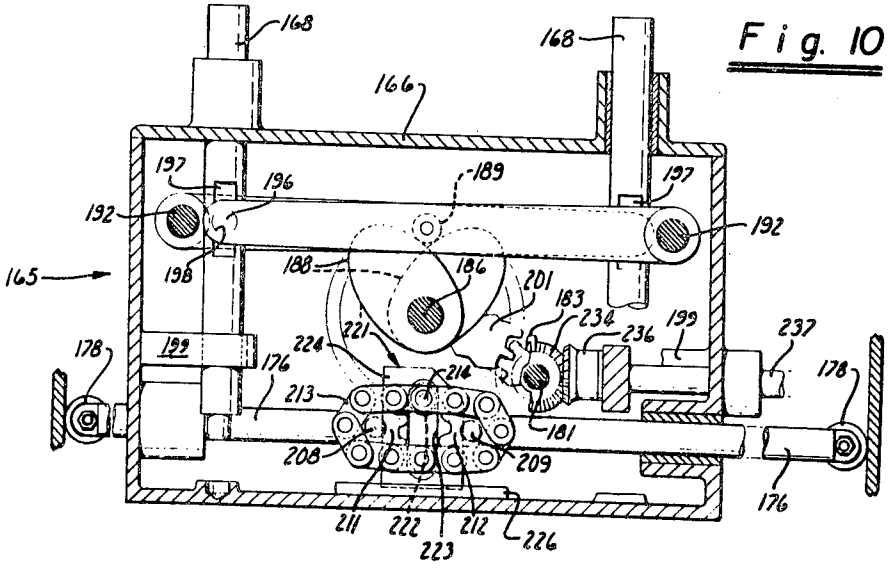

INVENTOR.
Alvoid V. Scollard
BY Alfred E. Comstock
Flehr and Swain
Attorney

Dec. 21, 1965 A. V. SCOLLARD ETAL 3,224,580

EGG WEIGHING AND SORTING APPARATUS

Original Filed Feb. 14, 1961 49 Sheets-Sheet 8

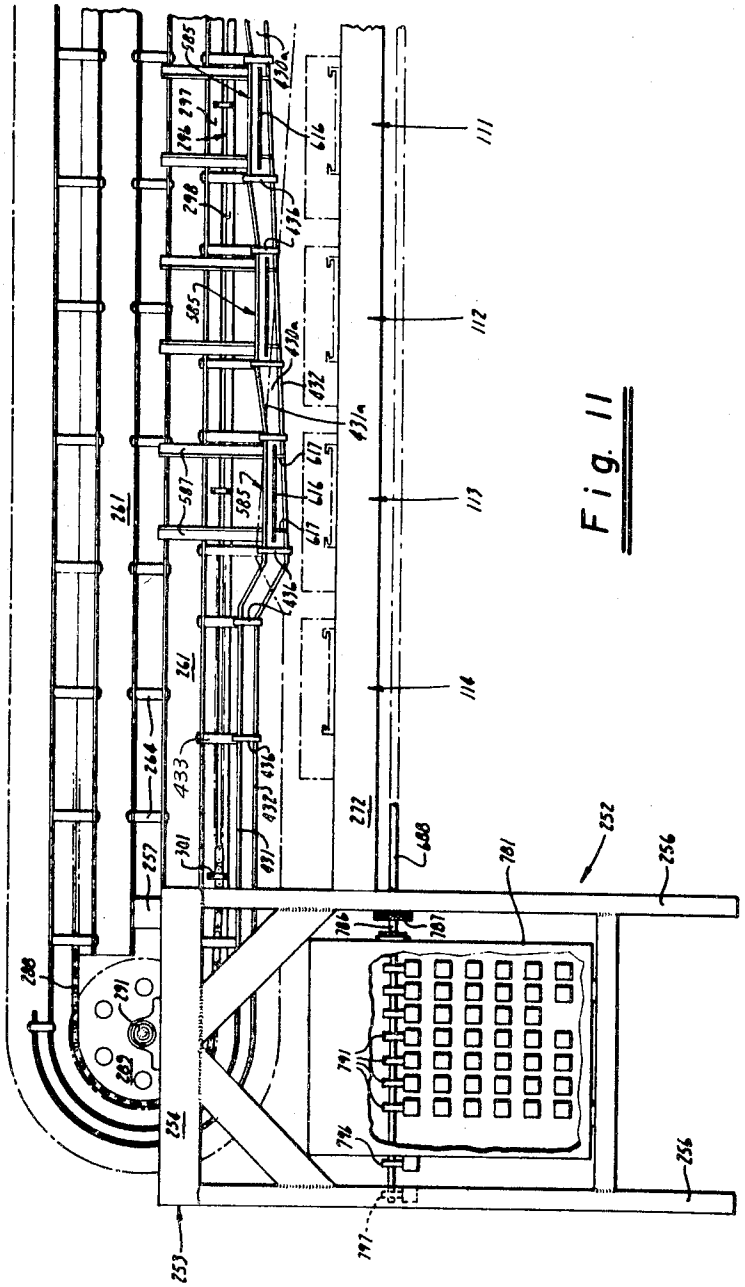

Fig. 11

INVENTOR.
Alvoid V. Scollard
BY Alfred E. Comstock
Fleh and Swain
Attorneys

Dec. 21, 1965 A. V. SCOLLARD ETAL 3,224,580

EGG WEIGHING AND SORTING APPARATUS

Original Filed Feb. 14, 1961 49 Sheets-Sheet 9

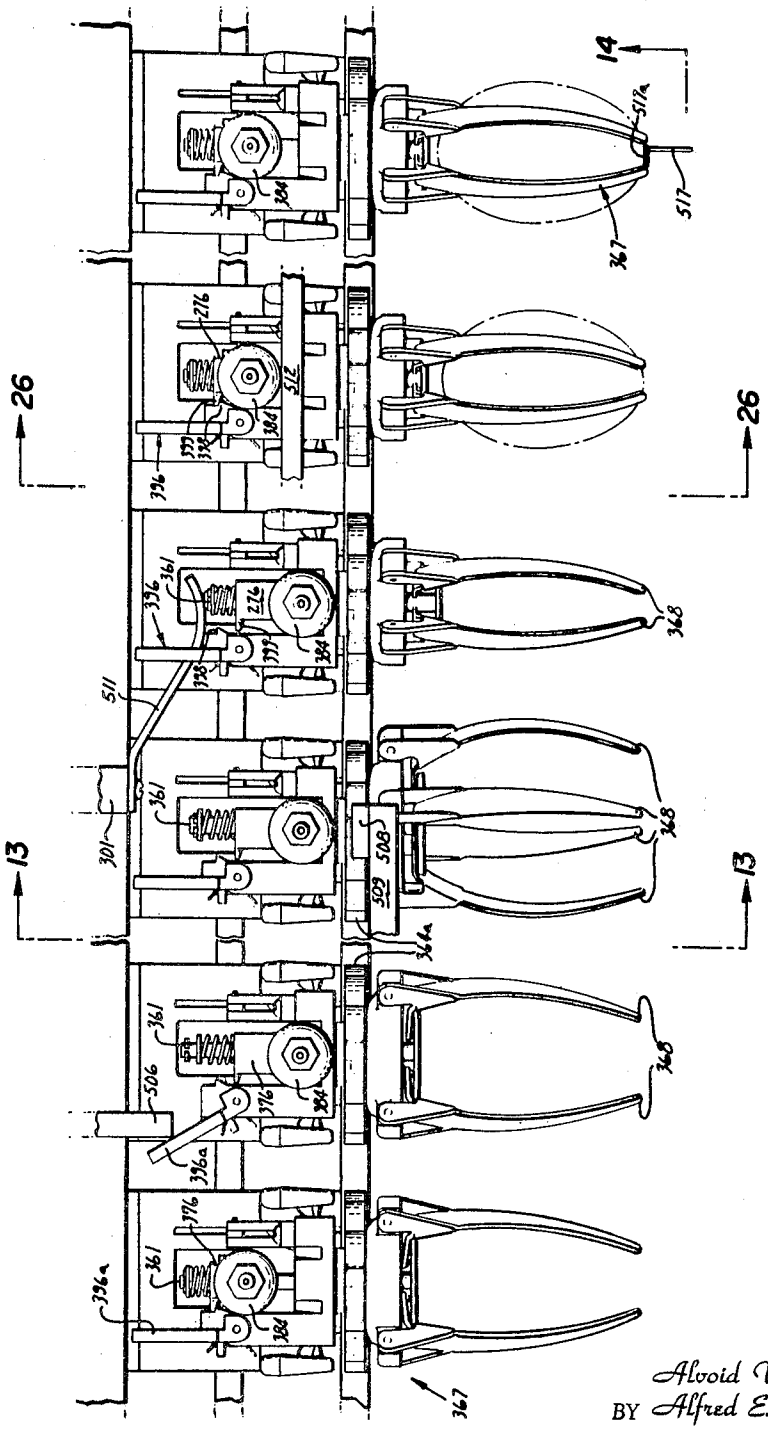

Fig. 12

INVENTOR.
Alvoid V. Scollard
BY Alfred E. Comstock
Flehr and Swain
Attorneys

Dec. 21, 1965 A. V. SCOLLARD ETAL 3,224,580

EGG WEIGHING AND SORTING APPARATUS

Original Filed Feb. 14, 1961 49 Sheets-Sheet 10

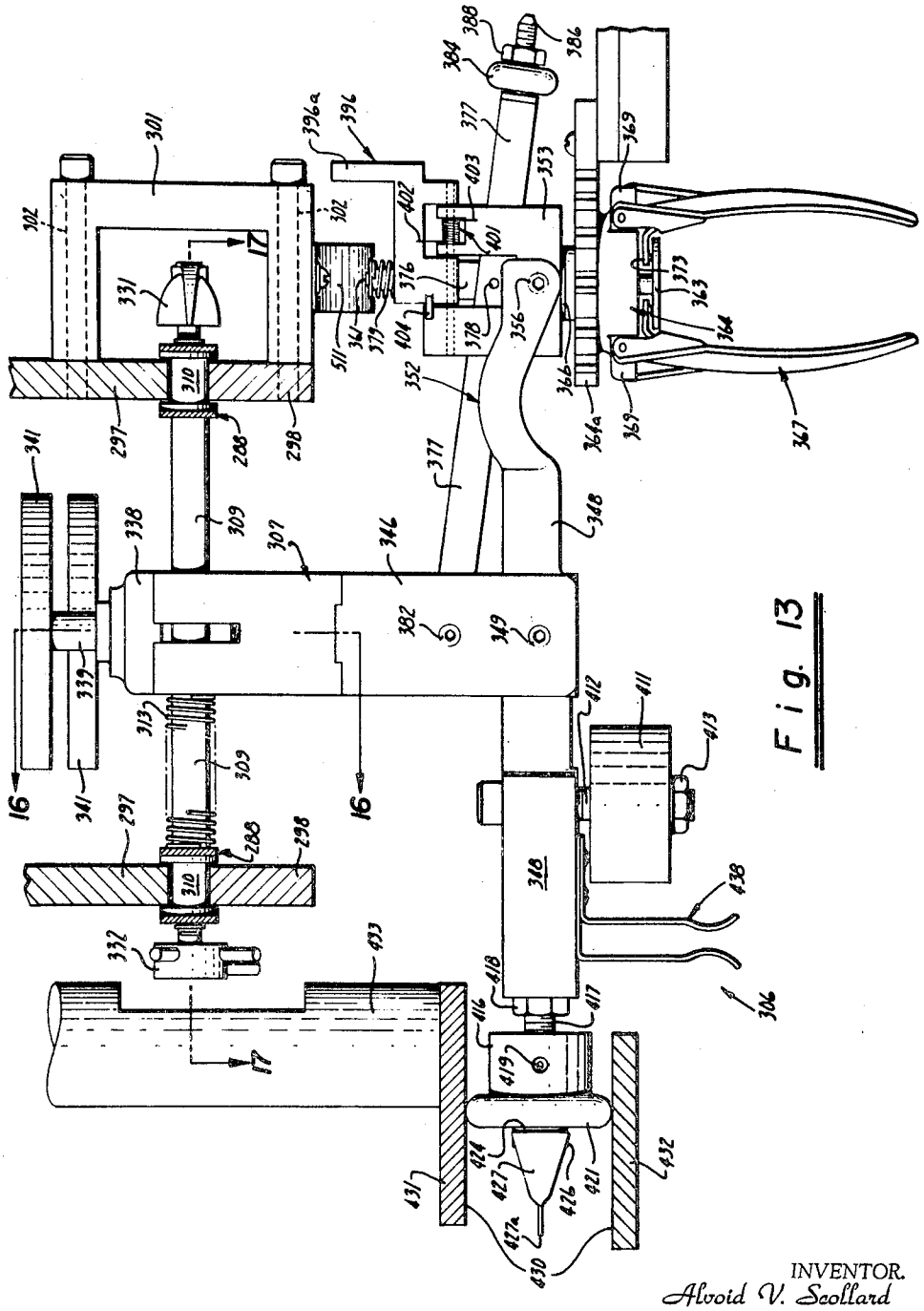

Fig. 13

INVENTOR.
Alvoid V. Scollard
BY Alfred E. Comstock
Fleh & Swain
Attorneys

Dec. 21, 1965 A. V. SCOLLARD ETAL 3,224,580

EGG WEIGHING AND SORTING APPARATUS

Original Filed Feb. 14, 1961 49 Sheets-Sheet 11

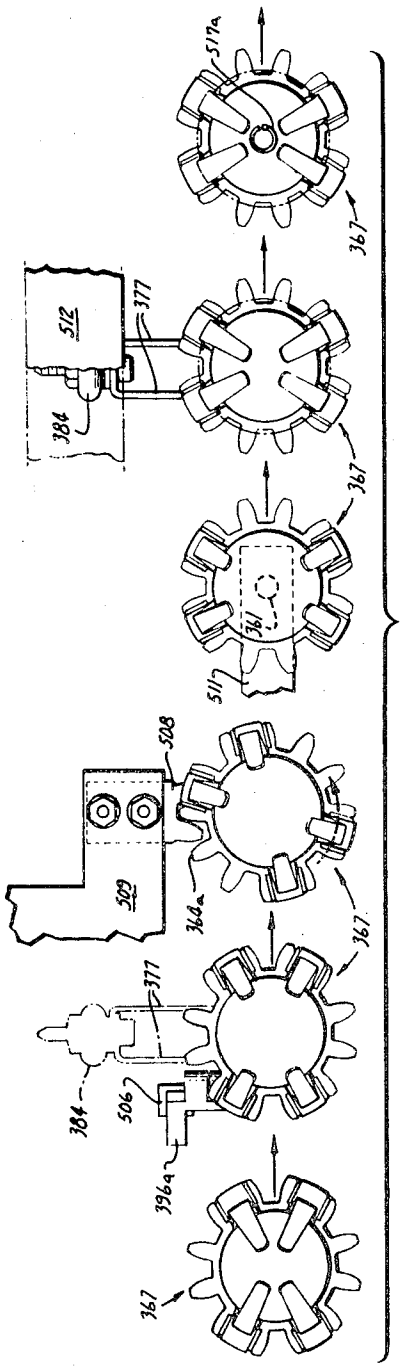

Fig. 14

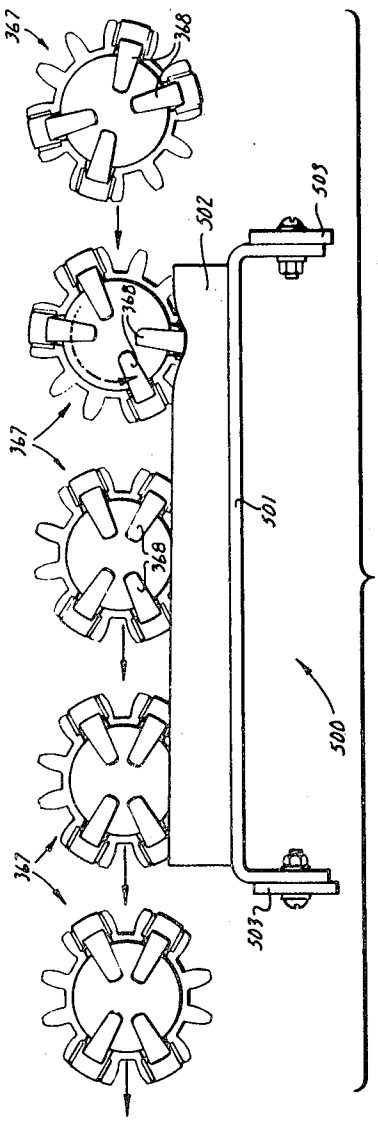

Fig. 15

INVENTOR.
Alvoid V. Scollard
BY Alfred E. Comstock
Flehr & Swain
Attorneys

Dec. 21, 1965 A. V. SCOLLARD ETAL 3,224,580

EGG WEIGHING AND SORTING APPARATUS

Original Filed Feb. 14, 1961 49 Sheets-Sheet 12

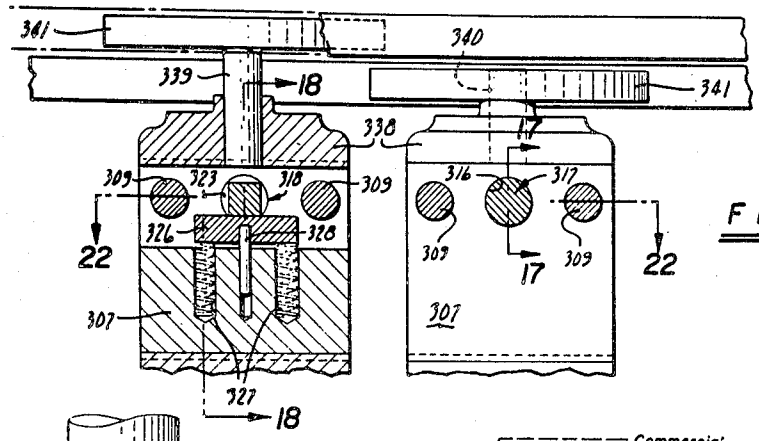

Fig. 16

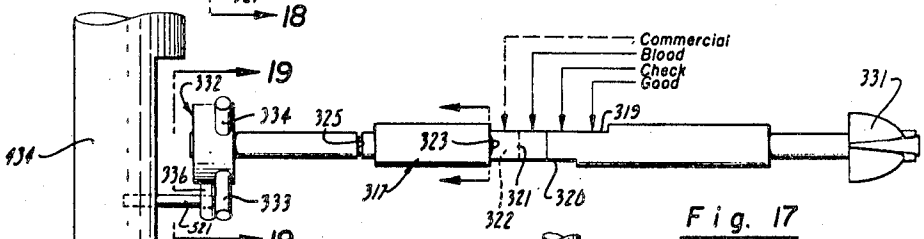

Fig. 17

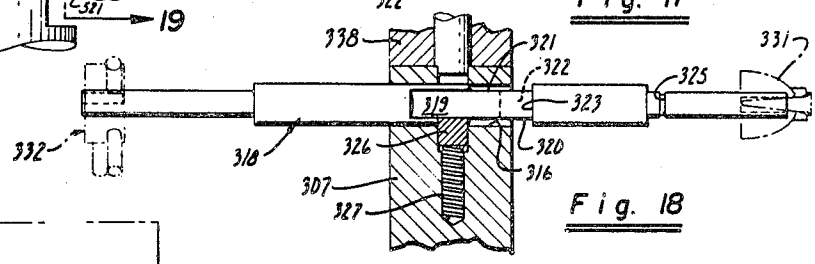

Fig. 18

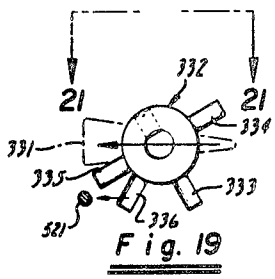

Fig. 19

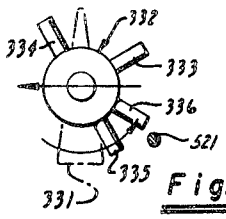

Fig. 20

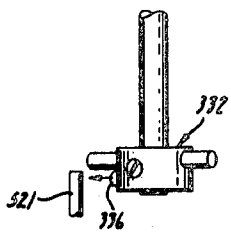

Fig. 21

INVENTOR.
Alvoid V. Scollard
BY Alfred E. Comstock
Fleh. & Swain
Attorneys

Dec. 21, 1965 A. V. SCOLLARD ETAL 3,224,580

EGG WEIGHING AND SORTING APPARATUS

Original Filed Feb. 14, 1961 49 Sheets-Sheet 13

Fig. 24

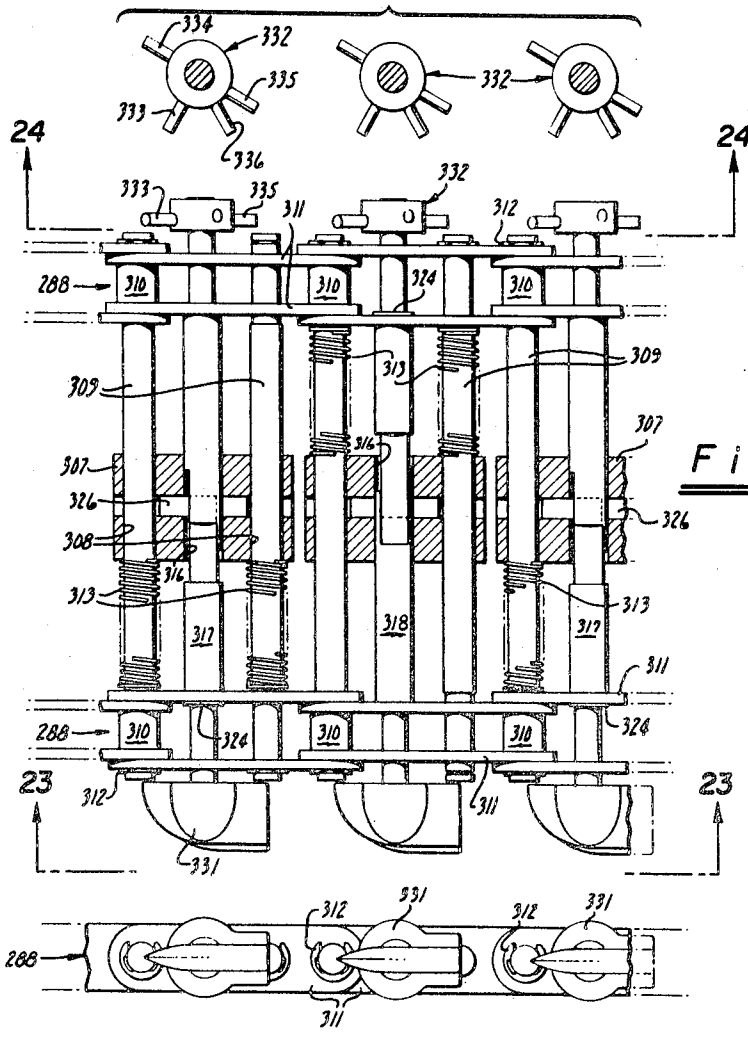

Fig. 22

Fig. 23

INVENTOR.
Alvoid V. Scollard
BY Alfred E. Comstock
Flehr and Swain
Attorneys

EGG WEIGHING AND SORTING APPARATUS

Original Filed Feb. 14, 1961 49 Sheets-Sheet 14

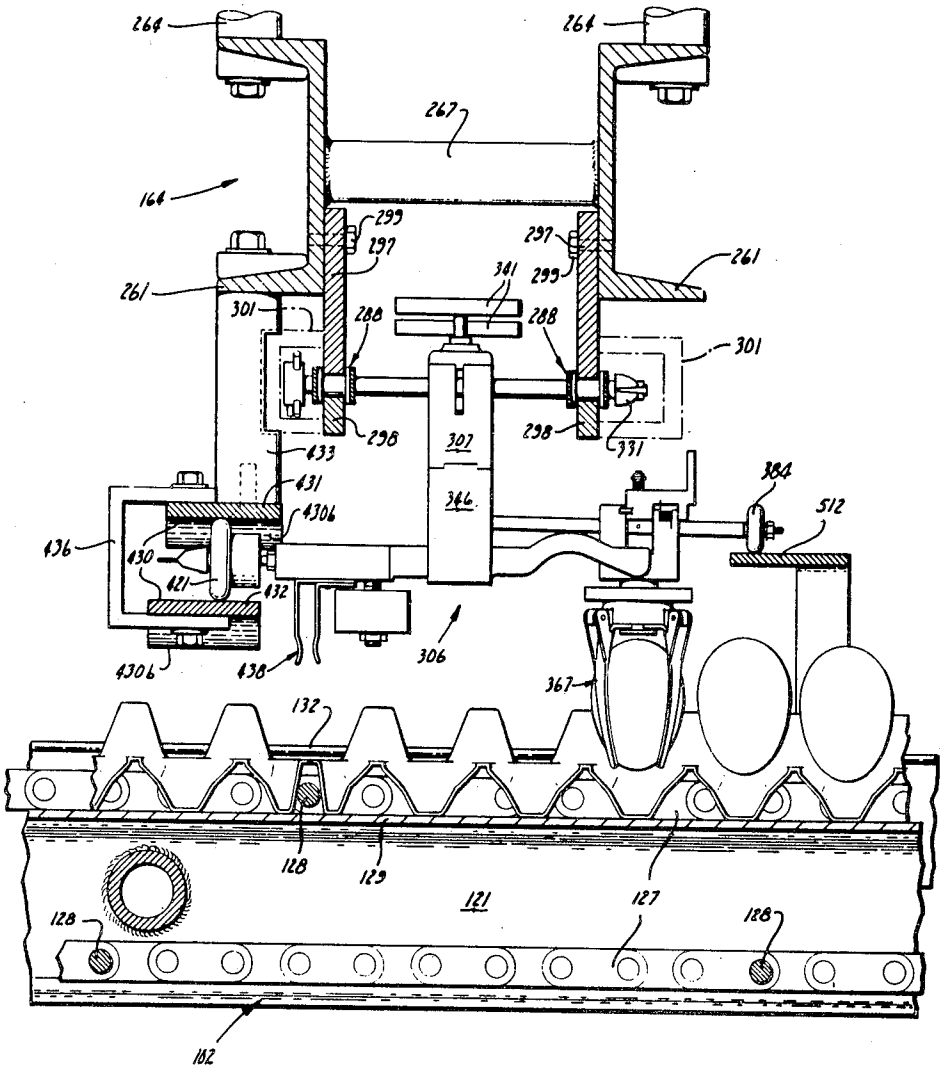

Fig. 25

INVENTOR.
Alvoid V. Scollard
BY Alfred E. Comstock
Fleh and Swain
Attorneys

Dec. 21, 1965 A. V. SCOLLARD ETAL 3,224,580

EGG WEIGHING AND SORTING APPARATUS

Original Filed Feb. 14, 1961 49 Sheets-Sheet 15

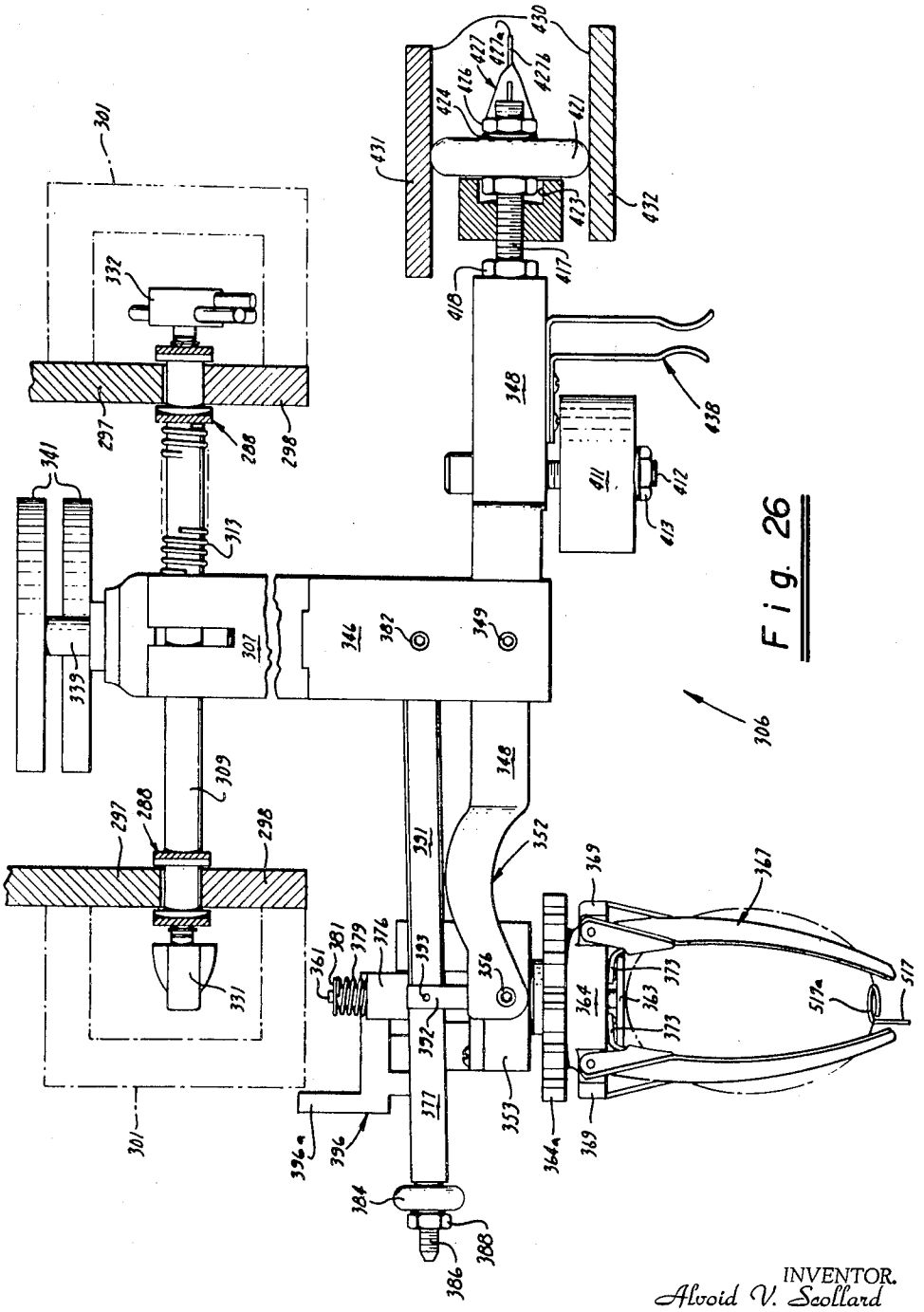

Fig. 26

INVENTOR.
Alvoid V. Scollard
BY Alfred E. Comstock
Flehr and Lucas
Attorneys

EGG WEIGHING AND SORTING APPARATUS

Original Filed Feb. 14, 1961 49 Sheets-Sheet 16

Fig. 27

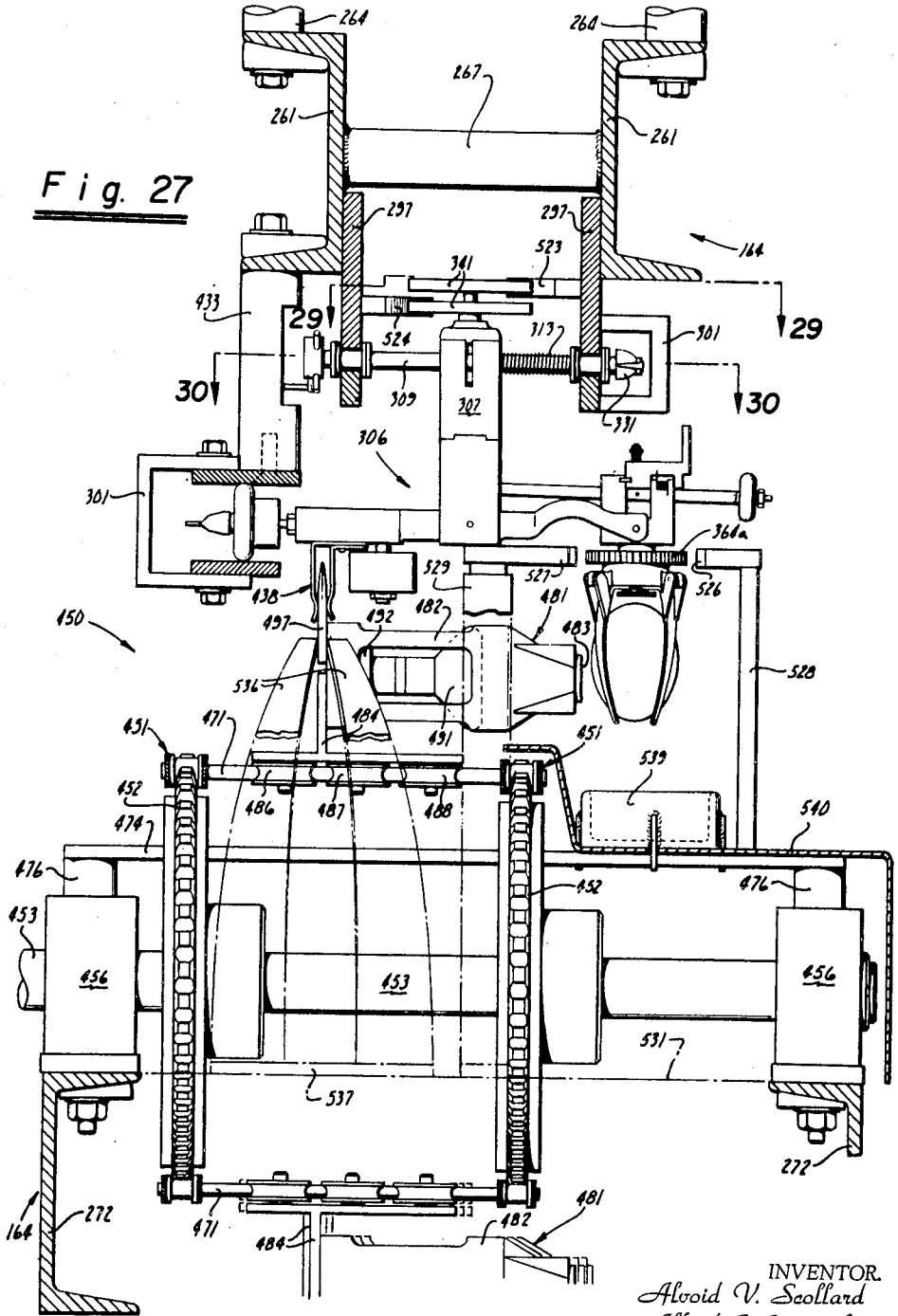

INVENTOR.
Alvoid V. Scollard
BY Alfred E. Comstock
Fleh & Swain
Attorneys

Dec. 21, 1965 A. V. SCOLLARD ETAL 3,224,580

EGG WEIGHING AND SORTING APPARATUS

Original Filed Feb. 14, 1961 49 Sheets-Sheet 17

Fig. 28

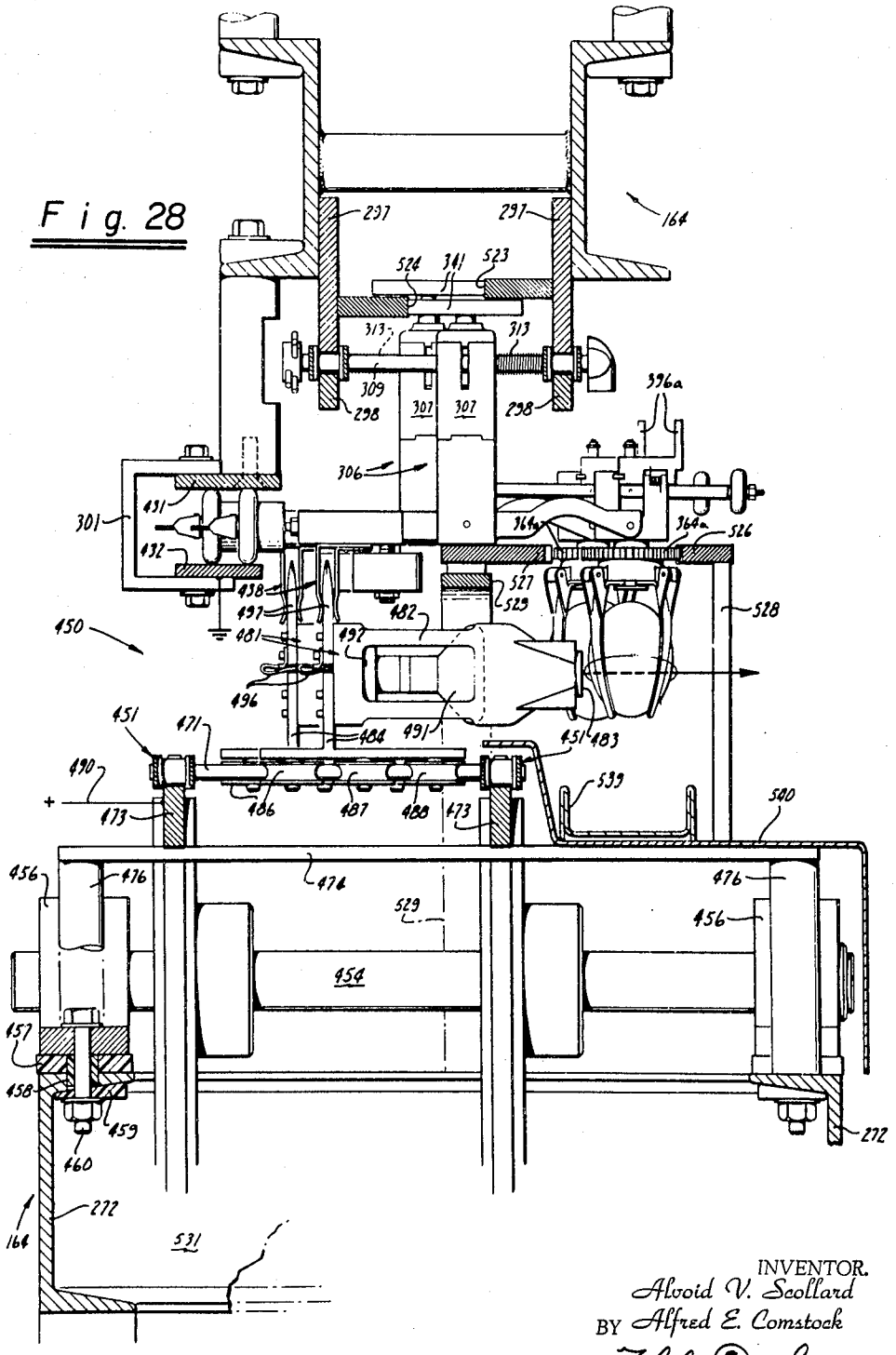

INVENTOR.
Alvoid V. Scollard
BY Alfred E. Comstock
Fleh & Swain
Attorneys

Dec. 21, 1965 A. V. SCOLLARD ETAL 3,224,580

EGG WEIGHING AND SORTING APPARATUS

Original Filed Feb. 14, 1961 49 Sheets-Sheet 18

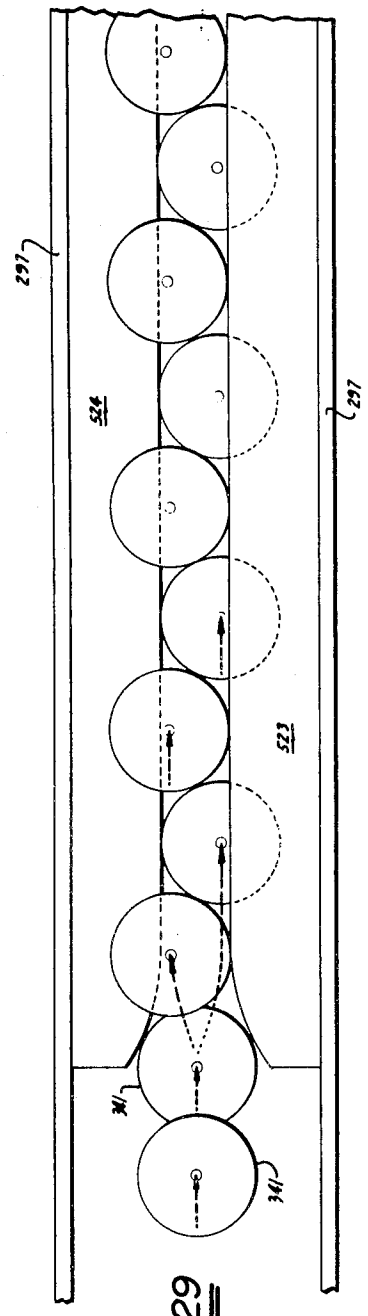

Fig. 29

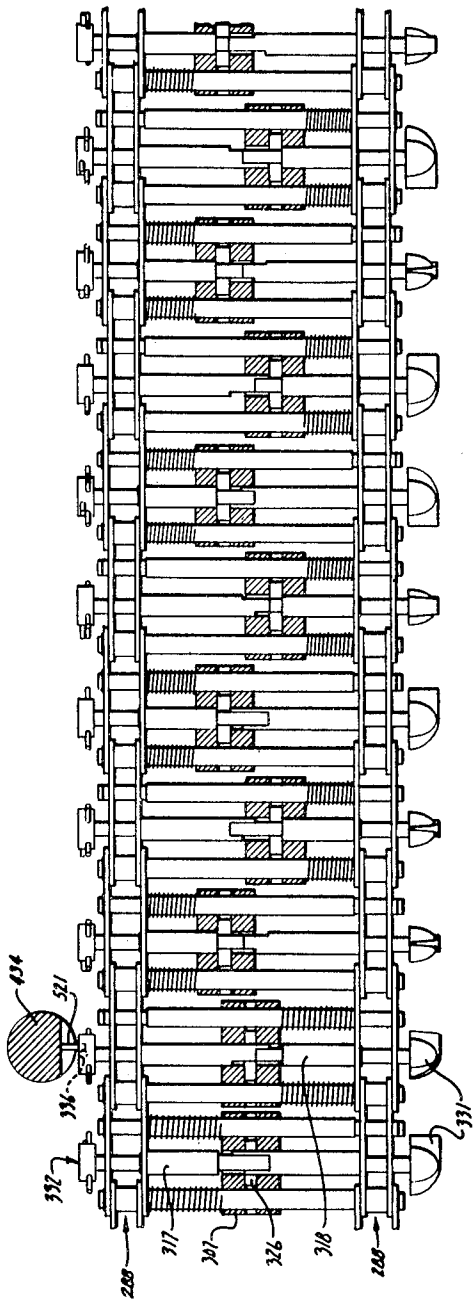

Fig. 30

INVENTOR.
Alvoid V. Scollard
BY Alfred E. Comstock
Fleh & Swain
Attorneys

Dec. 21, 1965 A. V. SCOLLARD ETAL 3,224,580

EGG WEIGHING AND SORTING APPARATUS

Original Filed Feb. 14, 1961 49 Sheets-Sheet 19

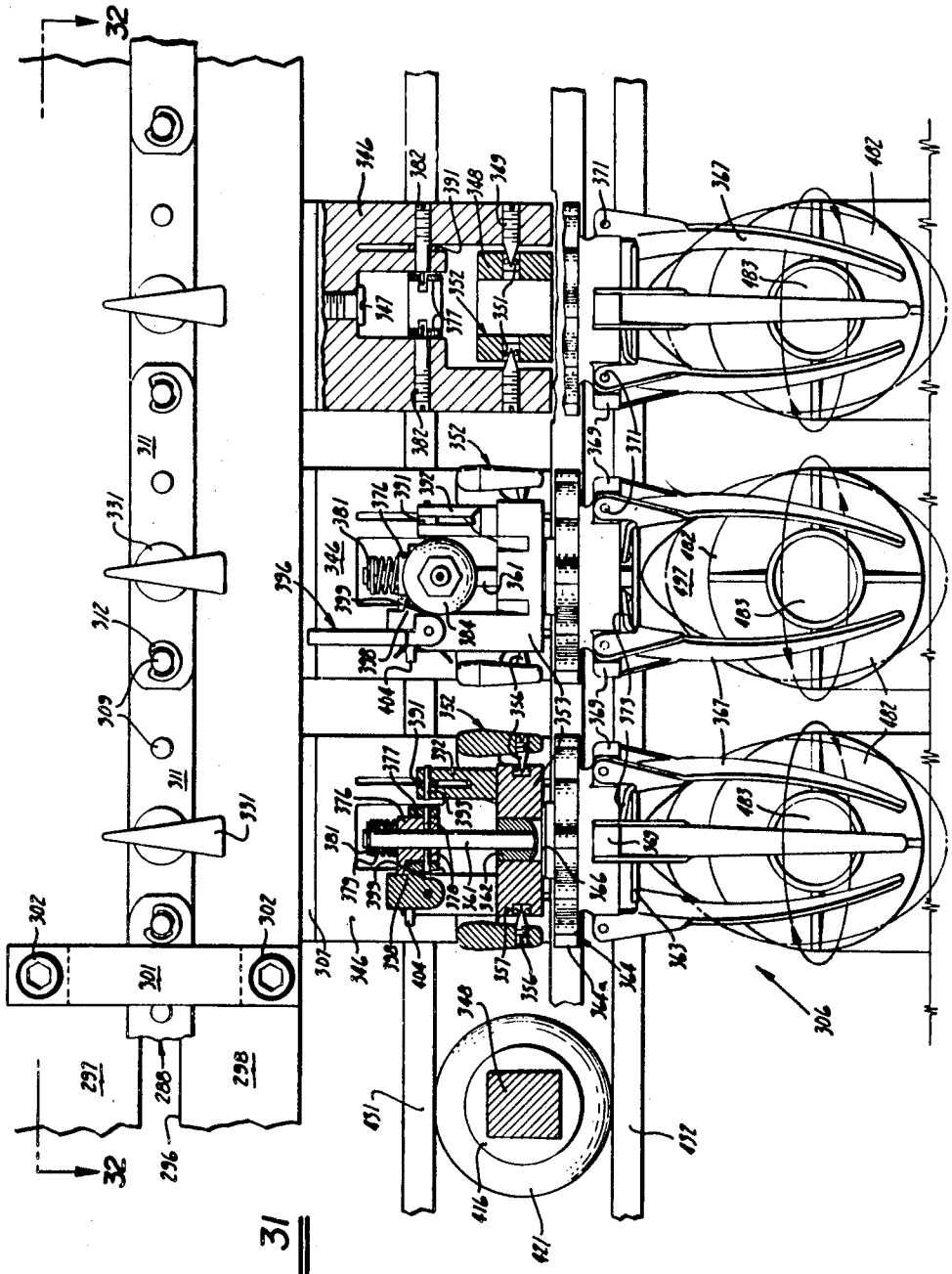

Fig. 31

INVENTOR.
Alvoid V. Scollard
BY Alfred E. Comstock
Fleh & Swain
Attorneys

Dec. 21, 1965 A. V. SCOLLARD ETAL 3,224,580

EGG WEIGHING AND SORTING APPARATUS

Original Filed Feb. 14, 1961 49 Sheets-Sheet 20

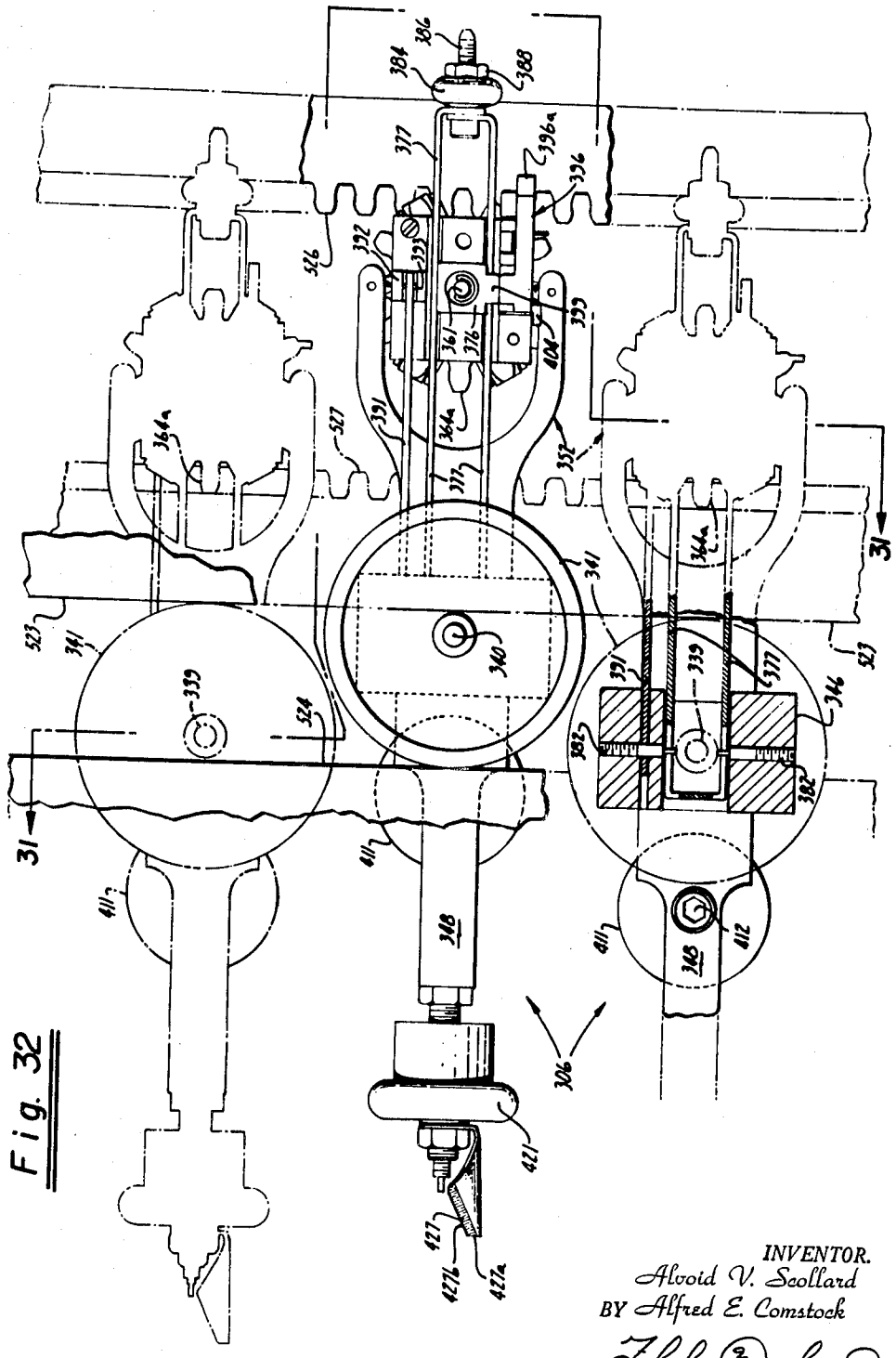

Fig. 32

INVENTOR.
Alvoid V. Scollard
BY Alfred E. Comstock
Fleh, Swain & Swain
Attorneys

Dec. 21, 1965 A. V. SCOLLARD ETAL 3,224,580

EGG WEIGHING AND SORTING APPARATUS

Original Filed Feb. 14, 1961

49 Sheets-Sheet 21

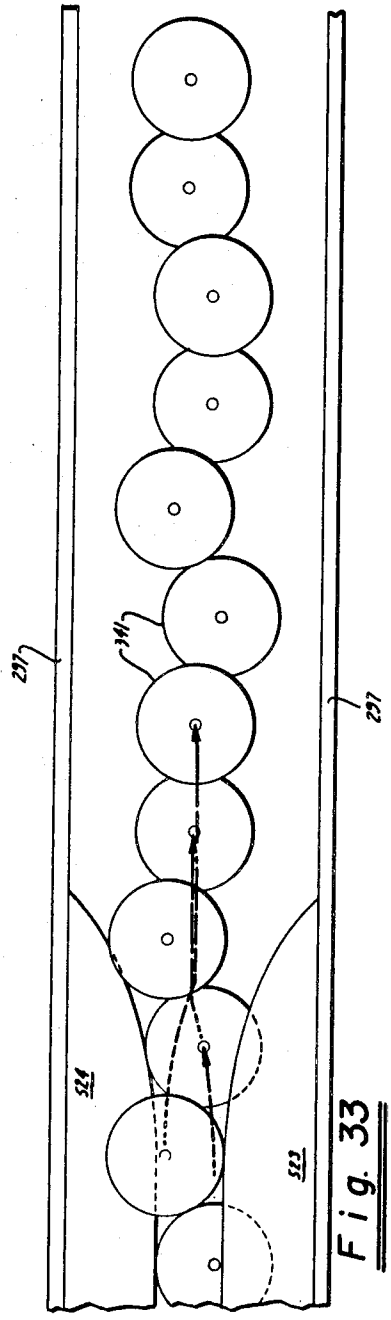

Fig. 33

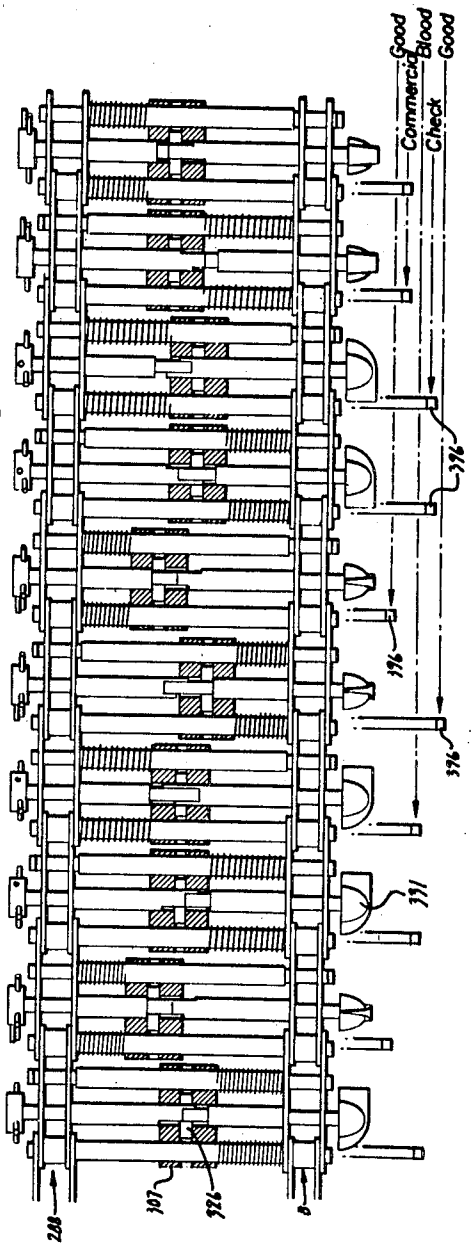

Fig. 34

INVENTOR.
Alvoid V. Scollard
BY Alfred E. Comstock
Fleh, and Swain
Attorneys

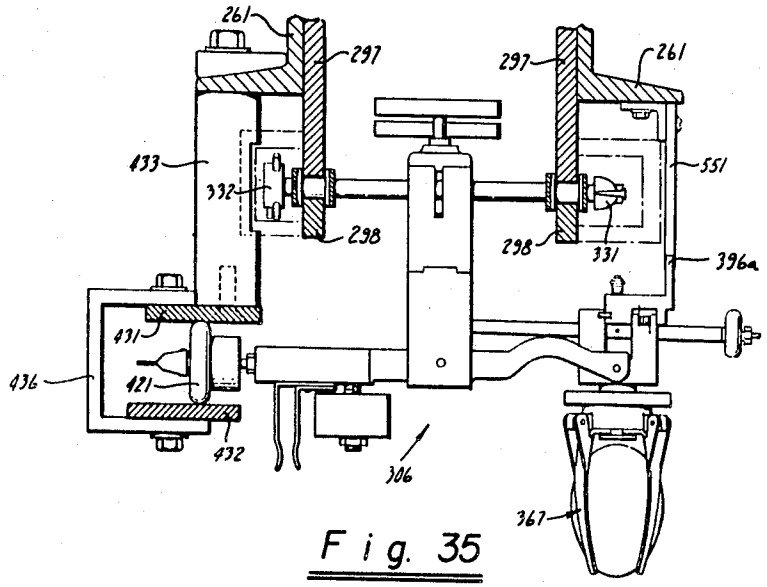

Fig. 35

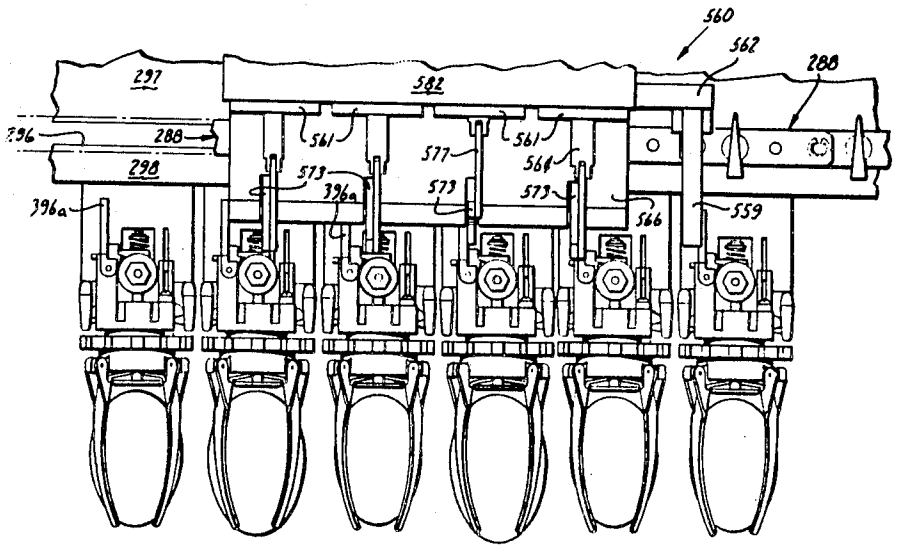

Fig. 37

INVENTOR.
Alvoid V. Scollard
BY Alfred E. Comstock
Fleh and Swain
Attorneys

Dec. 21, 1965 A. V. SCOLLARD ETAL 3,224,580

EGG WEIGHING AND SORTING APPARATUS

Original Filed Feb. 14, 1961 49 Sheets-Sheet 25

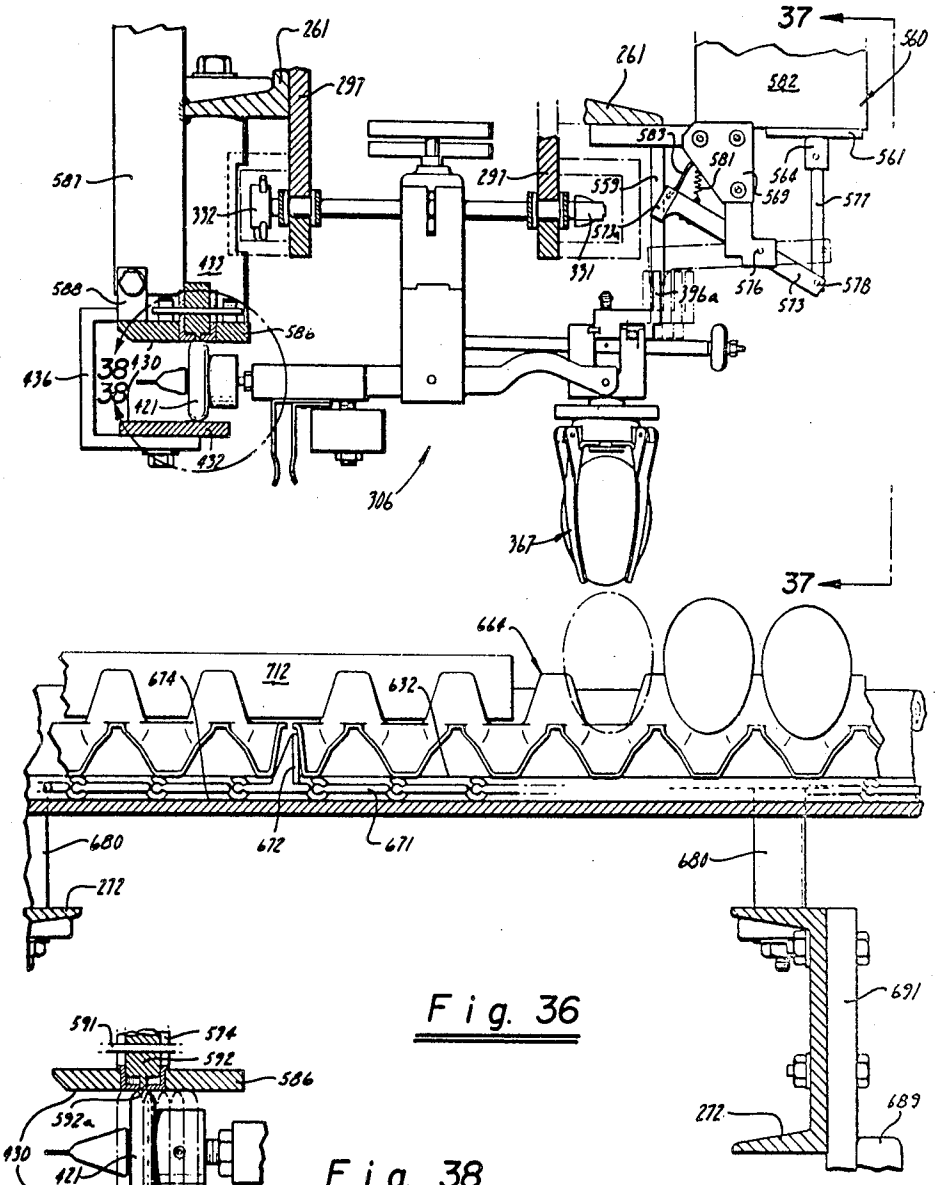

Fig. 36

Fig. 38

INVENTOR.
Alvoid V. Scollard
BY Alfred E. Comstock
Fleh & Swain
Attorneys

Dec. 21, 1965 A. V. SCOLLARD ETAL 3,224,580

EGG WEIGHING AND SORTING APPARATUS

Original Filed Feb. 14, 1961 49 Sheets-Sheet 24

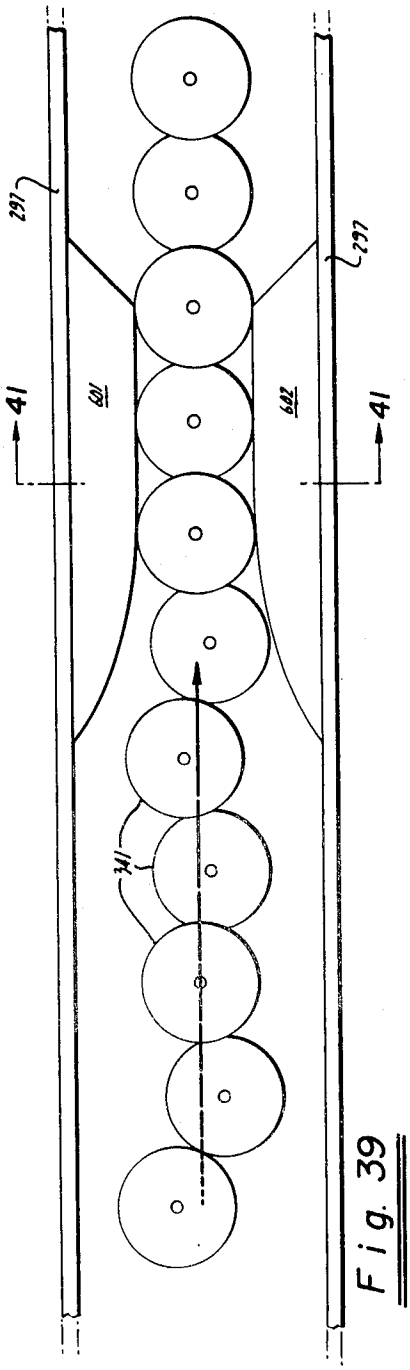

Fig. 39

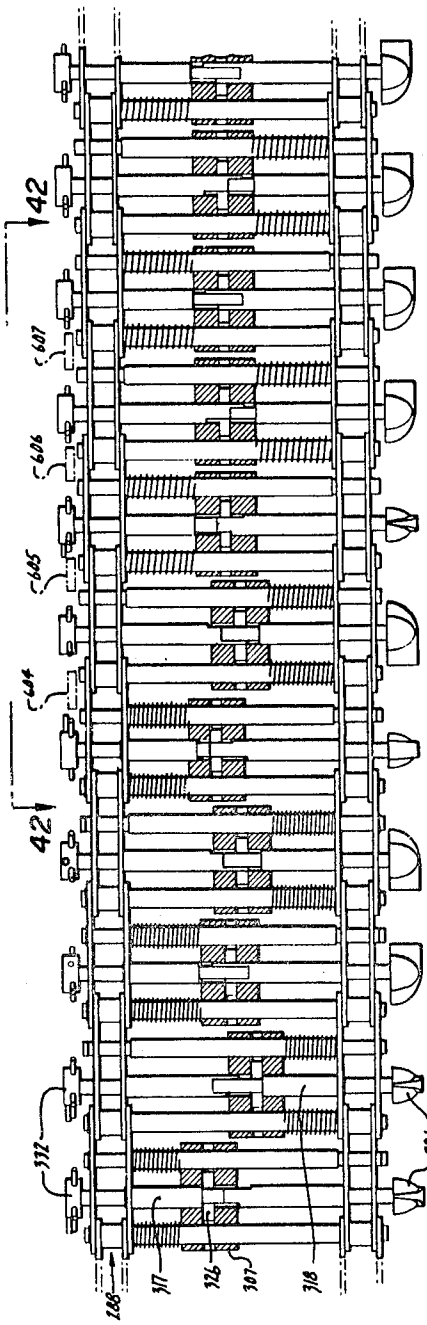

Fig. 40

INVENTOR.
Alvoid V. Scollard
BY Alfred E. Comstock
Fleh and Swain
Attorneys

Dec. 21, 1965 A. V. SCOLLARD ETAL 3,224,580

EGG WEIGHING AND SORTING APPARATUS

Original Filed Feb. 14, 1961 49 Sheets-Sheet 25

Fig. 41

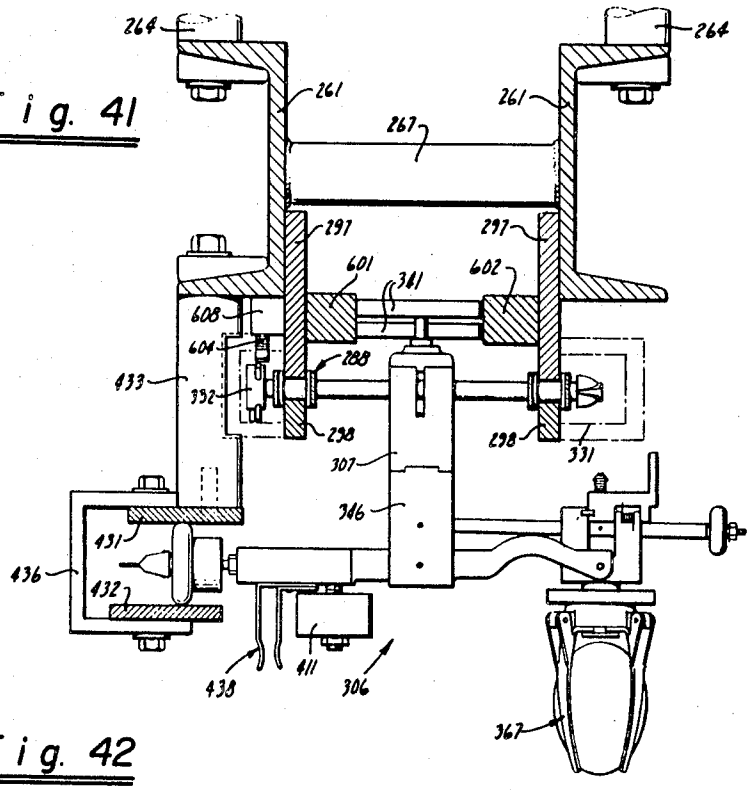

Fig. 42

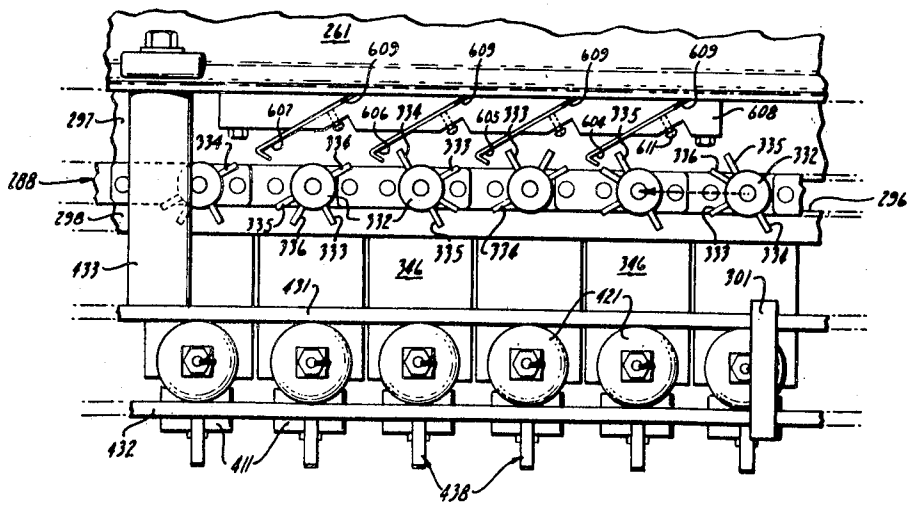

INVENTOR.
Alvoid V. Scollard
BY Alfred E. Comstock
Fleh & Swain
Attorneys

Dec. 21, 1965 A. V. SCOLLARD ETAL 3,224,580

EGG WEIGHING AND SORTING APPARATUS

Original Filed Feb. 14, 1961 49 Sheets-Sheet 26

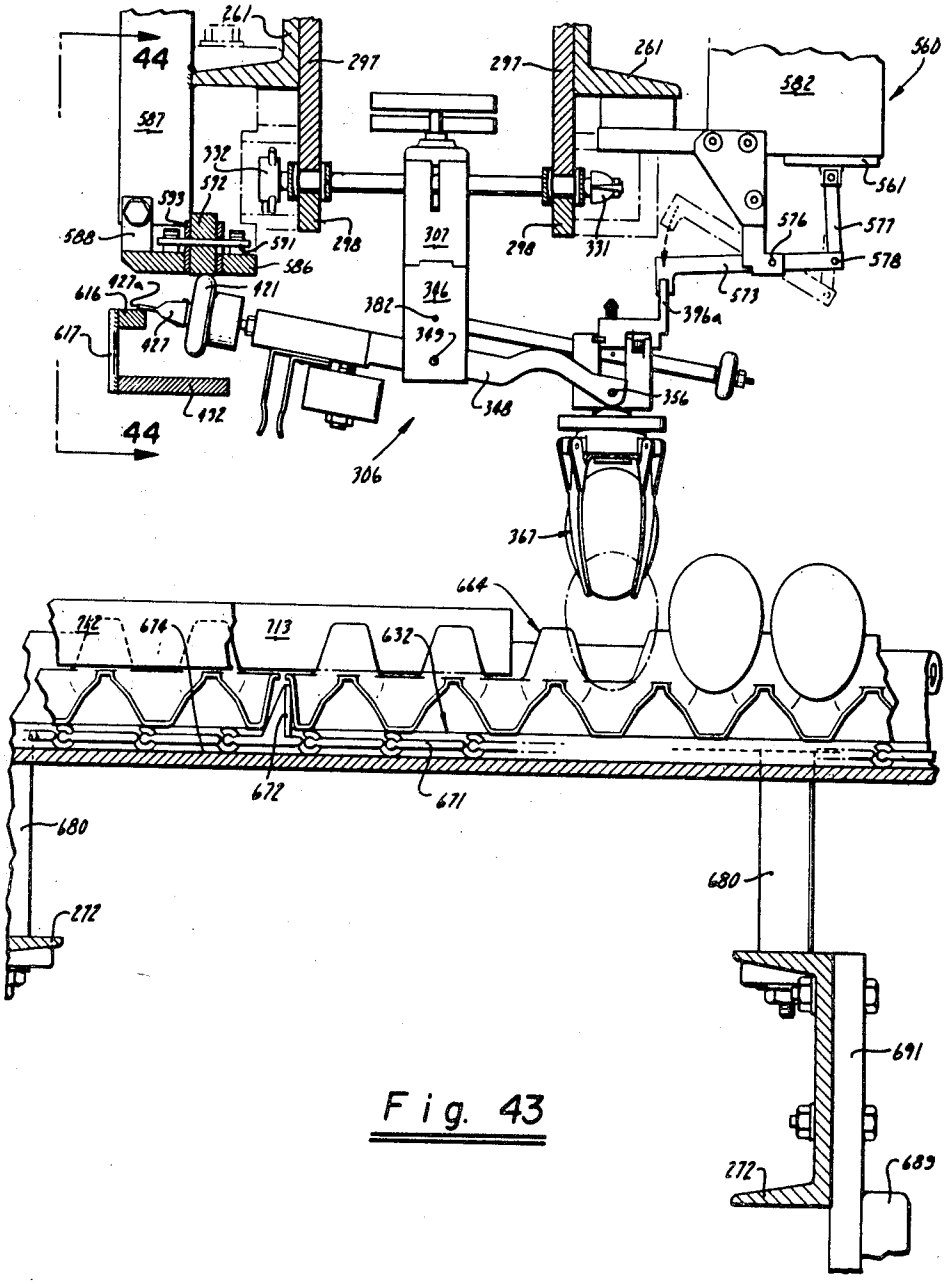

Fig. 43

INVENTOR.
Alvoid V. Scollard
BY Alfred E. Comstock
Flehr & Swain
Attorneys

Dec. 21, 1965 A. V. SCOLLARD ETAL 3,224,580

EGG WEIGHING AND SORTING APPARATUS

Original Filed Feb. 14, 1961 49 Sheets-Sheet 27

Fig. 44

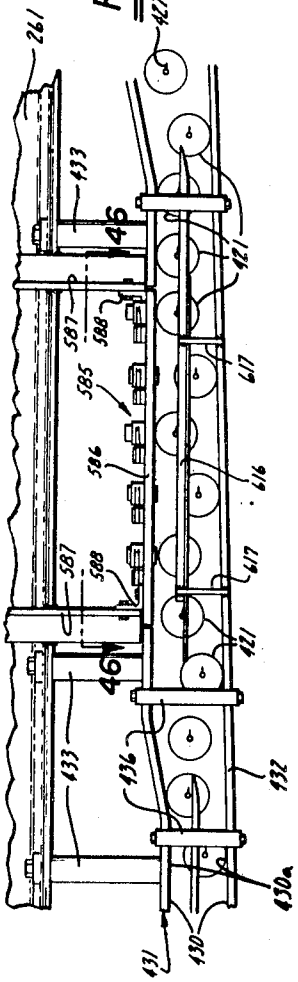

Fig. 45

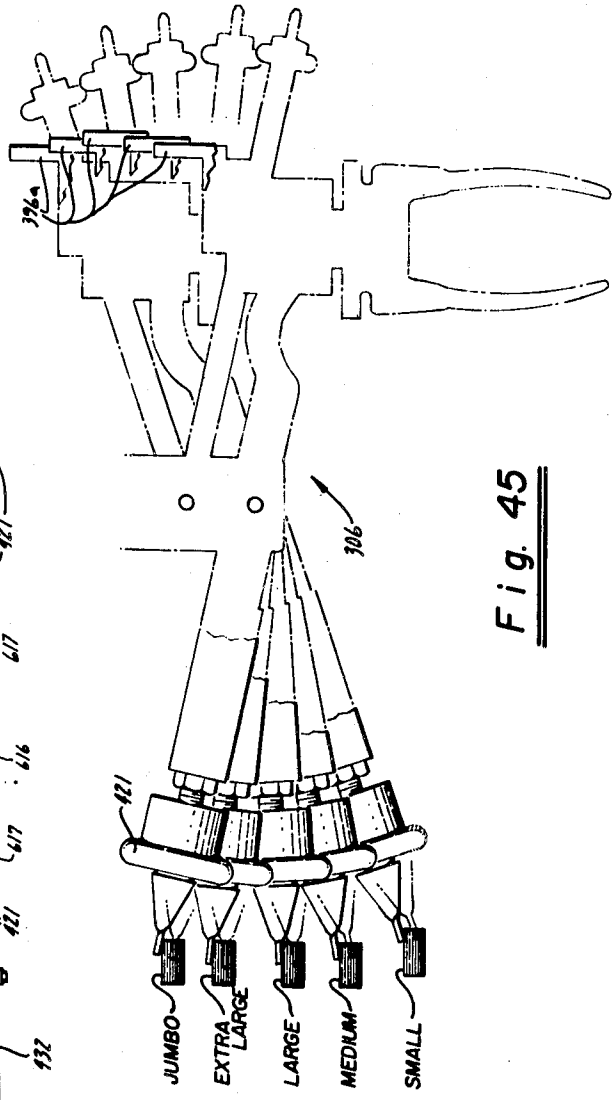

INVENTOR.
Alvoid V. Scollard
BY Alfred E. Comstock
Flehr and Swain
Attorneys

Dec. 21, 1965 A. V. SCOLLARD ETAL 3,224,580

EGG WEIGHING AND SORTING APPARATUS

Original Filed Feb. 14, 1961 49 Sheets-Sheet 28

Fig. 46

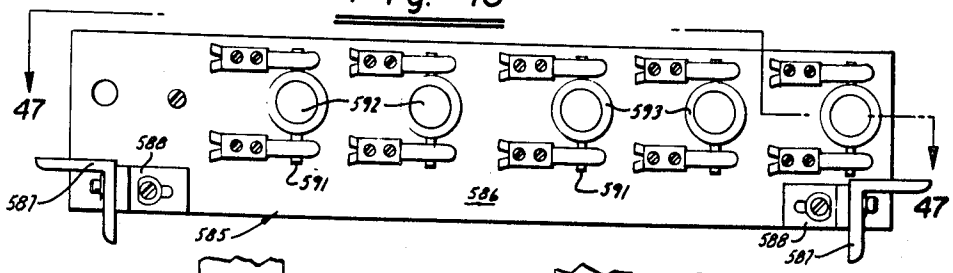

Fig. 50

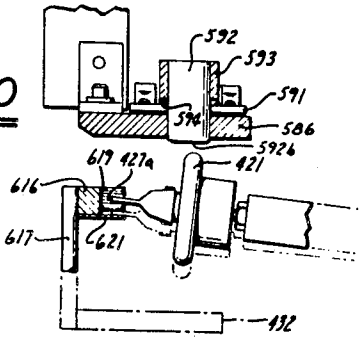

Fig. 49

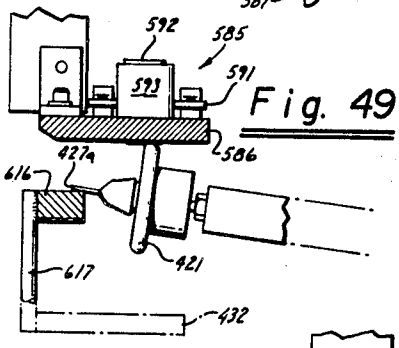

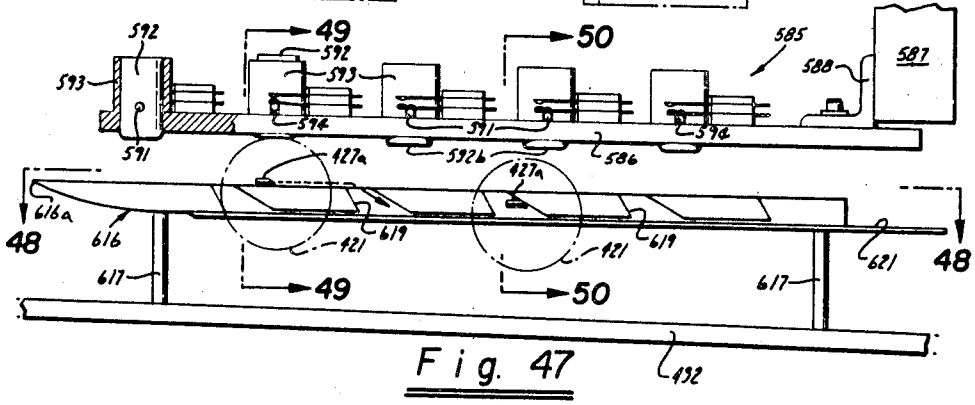

Fig. 47

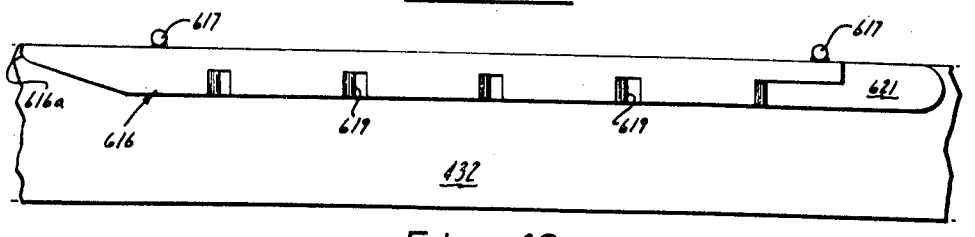

Fig. 48

INVENTOR.
Alvoid V. Scollard
BY Alfred E. Comstock
Flehr and Swain
Attorneys

Dec. 21, 1965 A. V. SCOLLARD ETAL 3,224,580

EGG WEIGHING AND SORTING APPARATUS

Original Filed Feb. 14, 1961 49 Sheets-Sheet 29

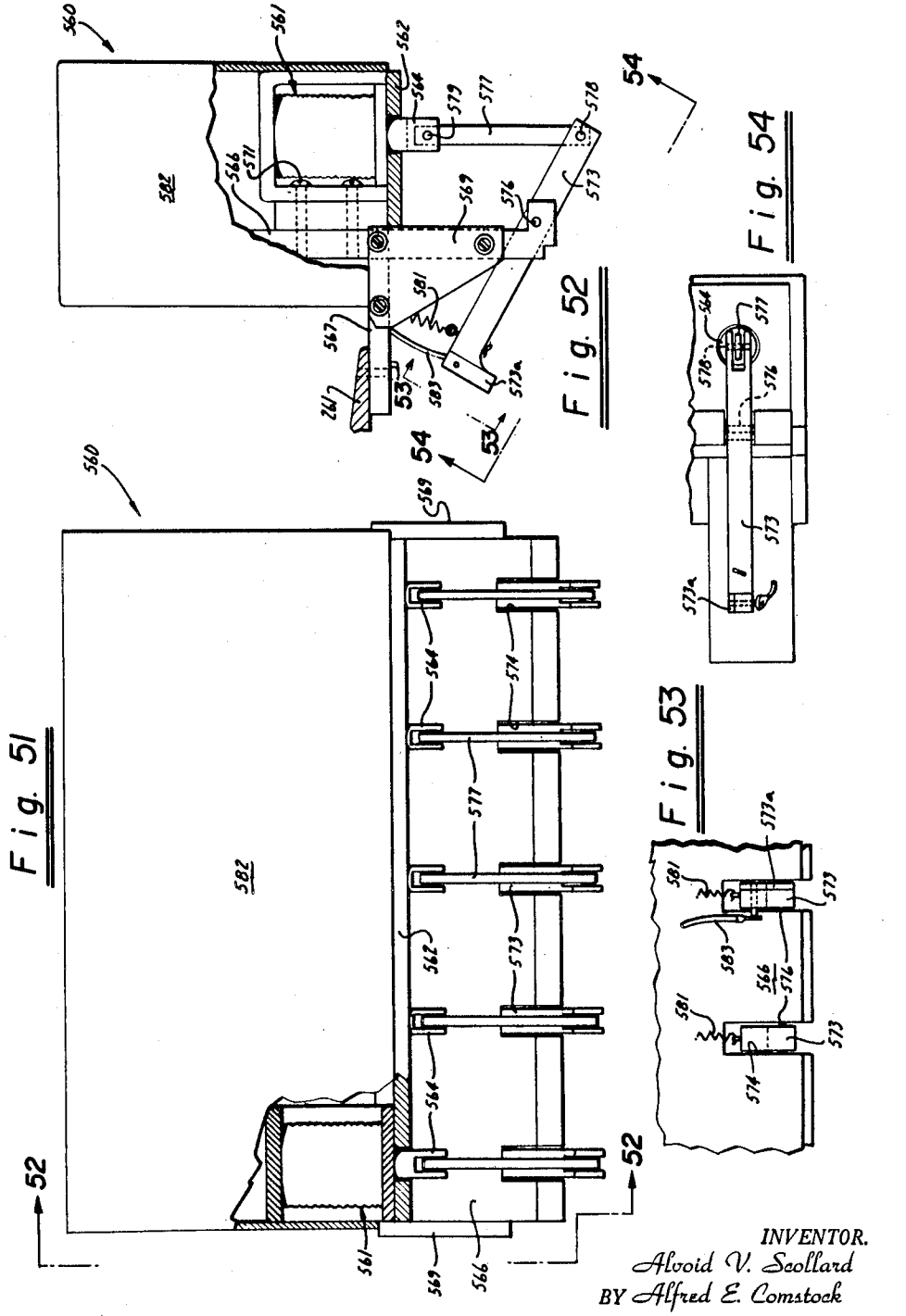

INVENTOR.
Alvoid V. Scollard
BY Alfred E. Comstock
Flehr Hohbach Swain
Attorneys

Dec. 21, 1965 A. V. SCOLLARD ETAL 3,224,580

EGG WEIGHING AND SORTING APPARATUS

Original Filed Feb. 14, 1961 49 Sheets-Sheet 30

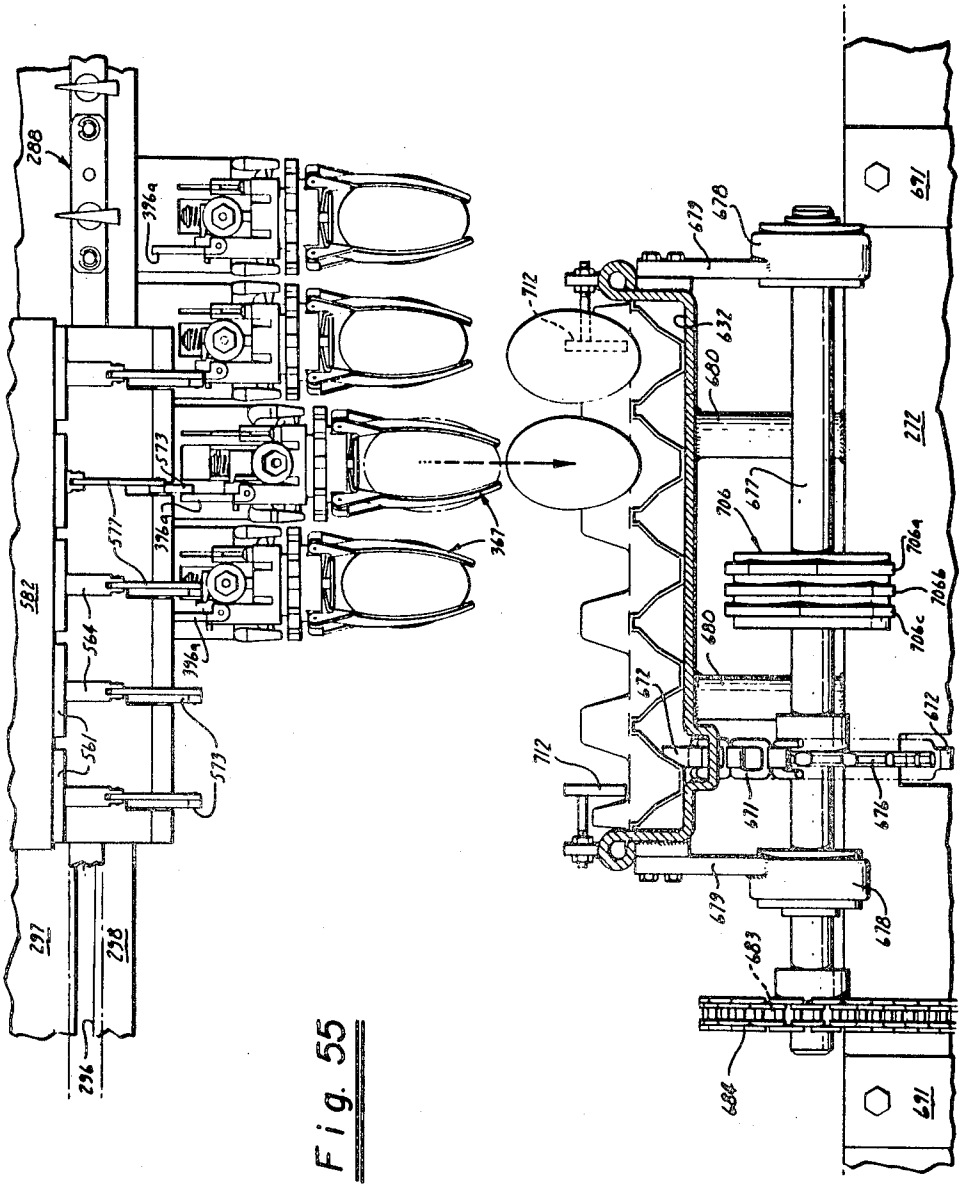

Fig. 55

INVENTOR.
Alvoid V. Scollard
BY Alfred E. Comstock
Zlehr and Swain
Attorneys

Dec. 21, 1965 A. V. SCOLLARD ETAL 3,224,580

EGG WEIGHING AND SORTING APPARATUS

Original Filed Feb. 14, 1961 49 Sheets-Sheet 31

Fig. 56

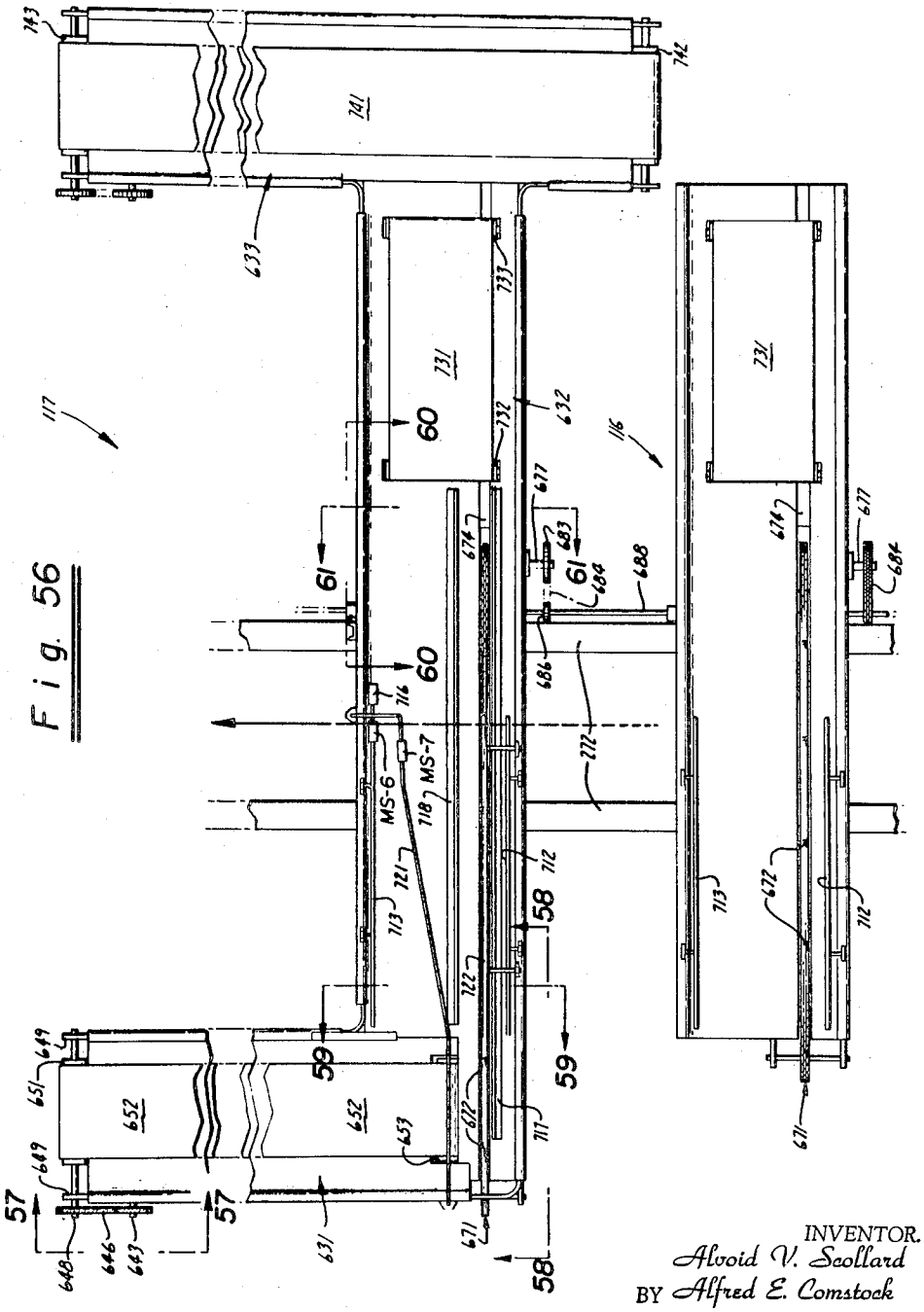

INVENTOR.
Alvoid V. Scollard
BY Alfred E. Comstock
Fleh and Swain
Attorneys

Dec. 21, 1965 A. V. SCOLLARD ETAL 3,224,580

EGG WEIGHING AND SORTING APPARATUS

Original Filed Feb. 14, 1961

49 Sheets-Sheet 32

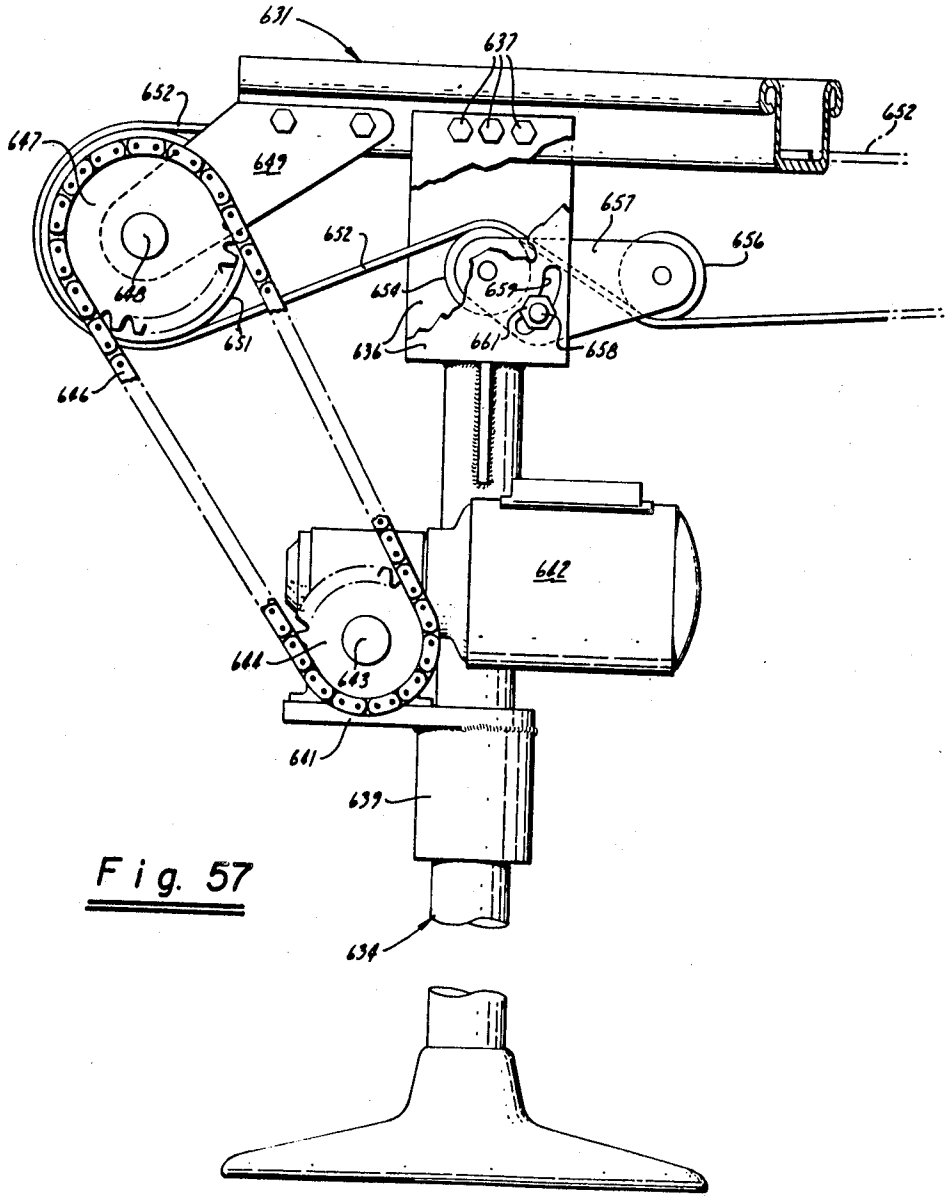

Fig. 57

INVENTOR.
Alvoid V. Scollard
BY Alfred E. Comstock
Flehr & Swain
Attorneys

Dec. 21, 1965 A. V. SCOLLARD ETAL 3,224,580

EGG WEIGHING AND SORTING APPARATUS

Original Filed Feb. 14, 1961 49 Sheets-Sheet 33

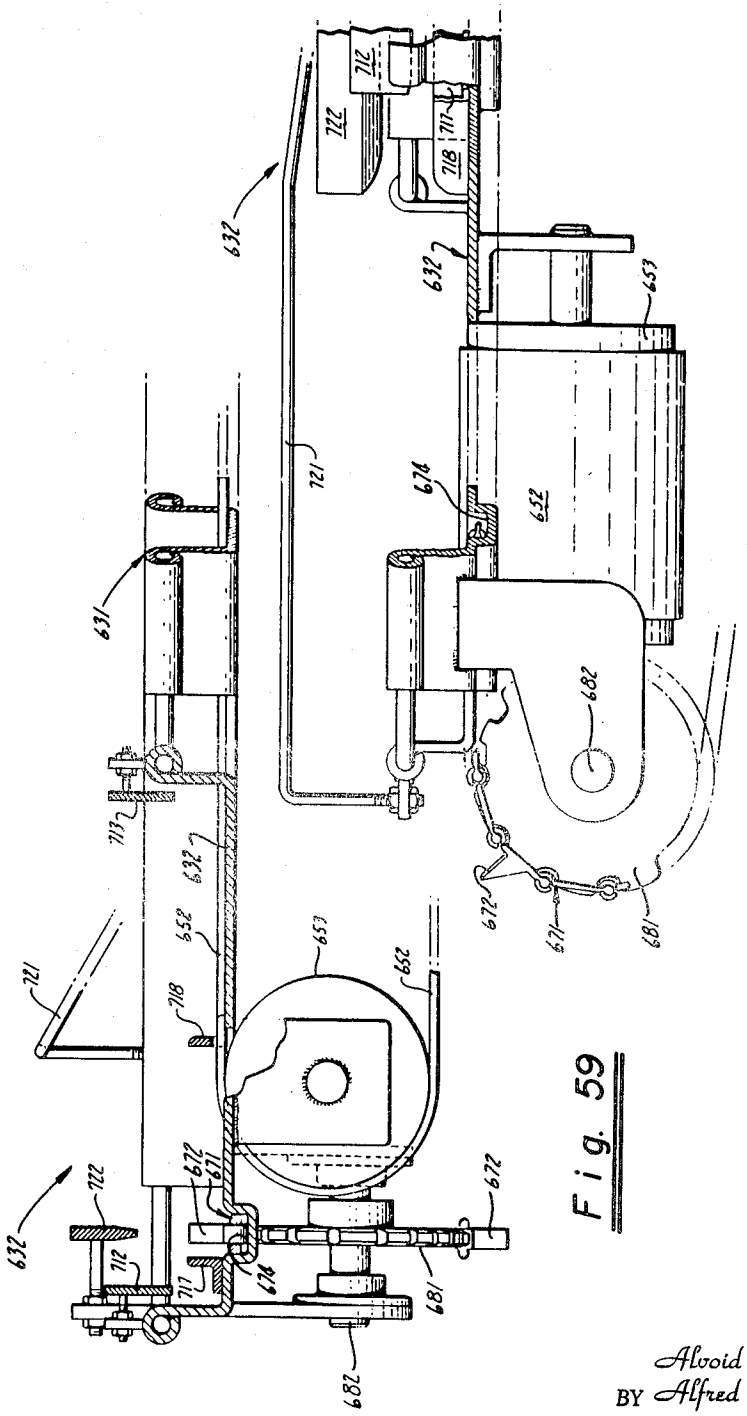

Fig. 58

Fig. 59

INVENTOR.
Alvoid V. Scollard
BY Alfred E. Comstock
Flehr & Swain
Attorneys

Dec. 21, 1965 A. V. SCOLLARD ETAL 3,224,580

EGG WEIGHING AND SORTING APPARATUS

Original Filed Feb. 14, 1961 49 Sheets-Sheet 34

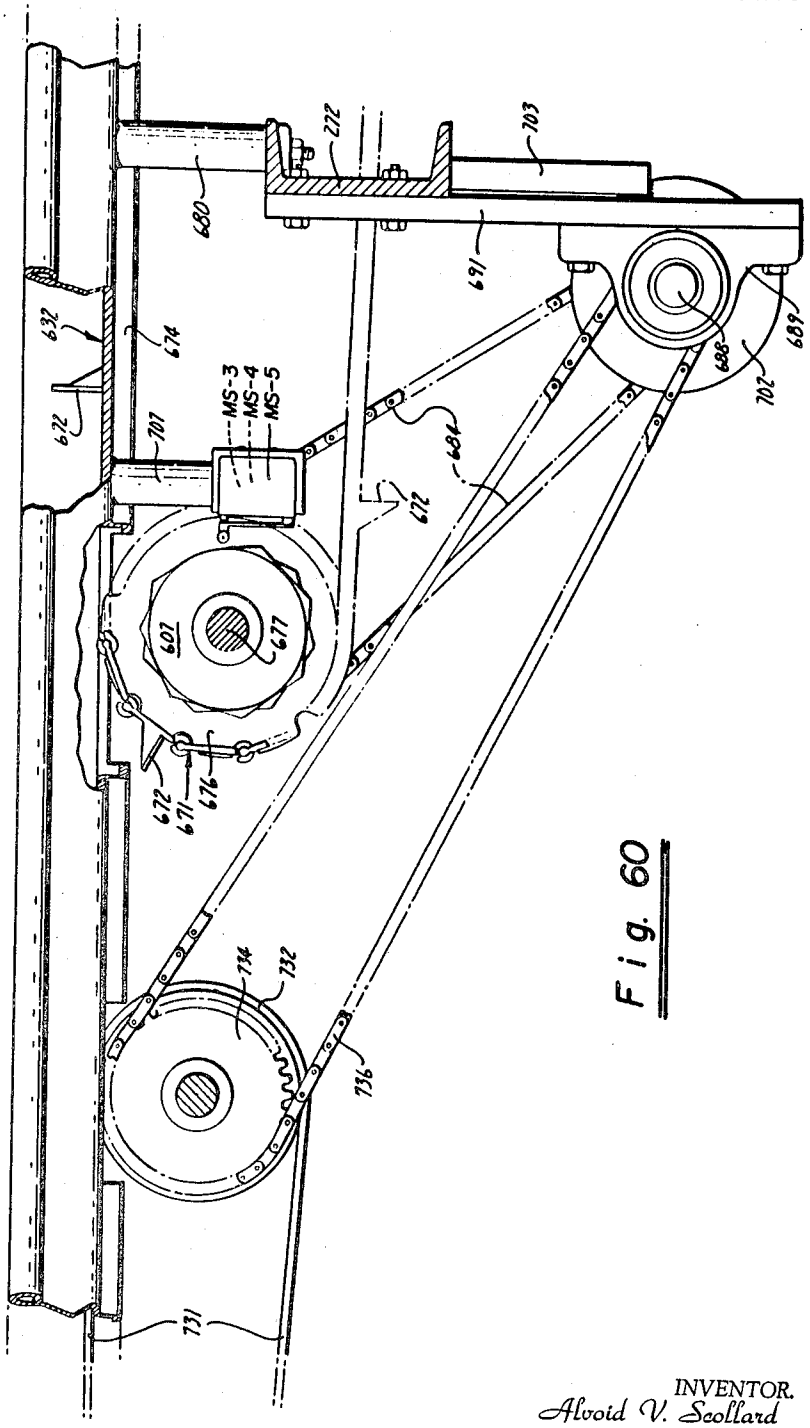

Fig. 60

INVENTOR.
Alvoid V. Scollard
BY Alfred E. Comstock
Flehr & Swain
Attorneys

Dec. 21, 1965 A. V. SCOLLARD ETAL 3,224,580

EGG WEIGHING AND SORTING APPARATUS

Original Filed Feb. 14, 1961 49 Sheets-Sheet 35

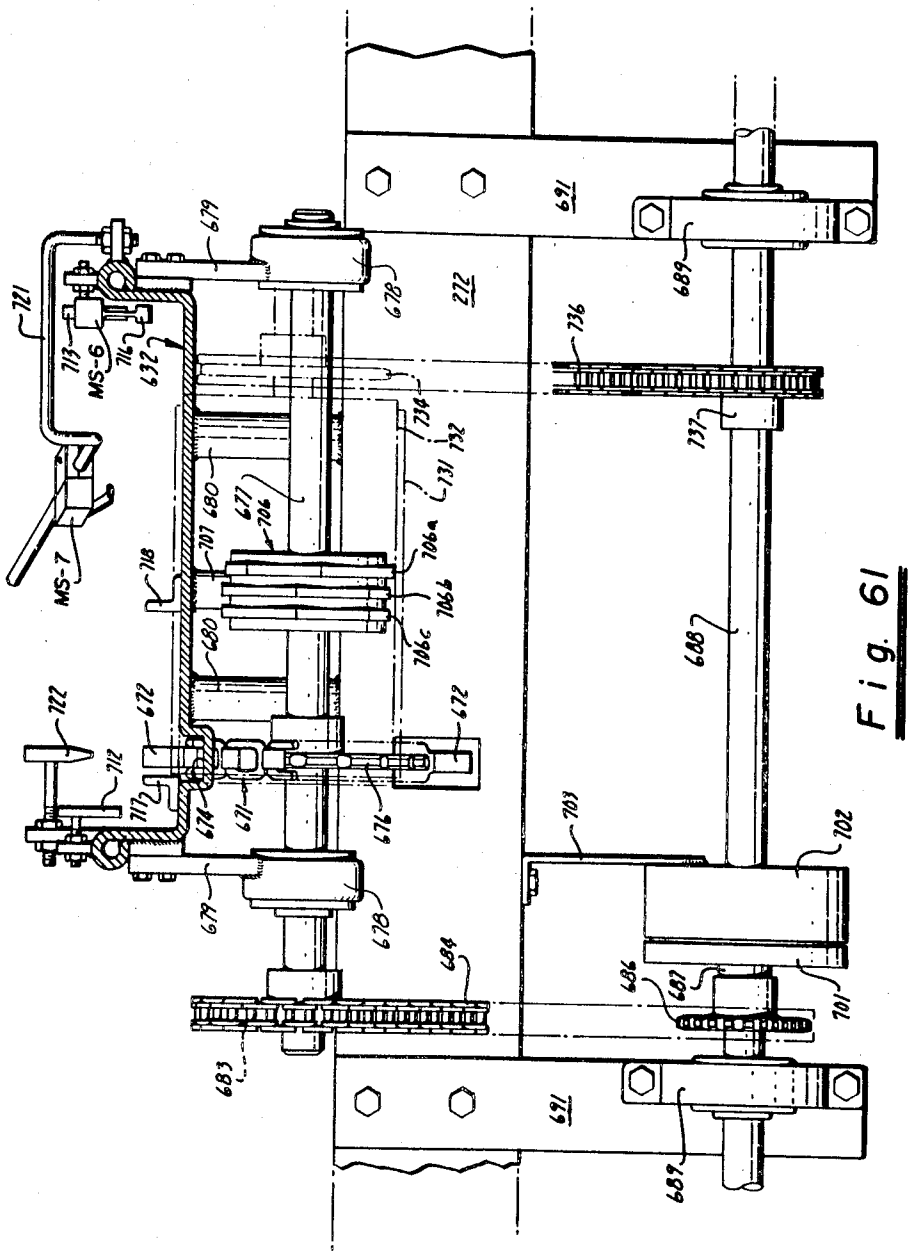

Fig. 61

INVENTOR.
Alvoid V. Scollard
BY Alfred E. Comstock
Flehr and Swain
Attorneys

Dec. 21, 1965 A. V. SCOLLARD ETAL 3,224,580

EGG WEIGHING AND SORTING APPARATUS

Original Filed Feb. 14, 1961 49 Sheets-Sheet 36

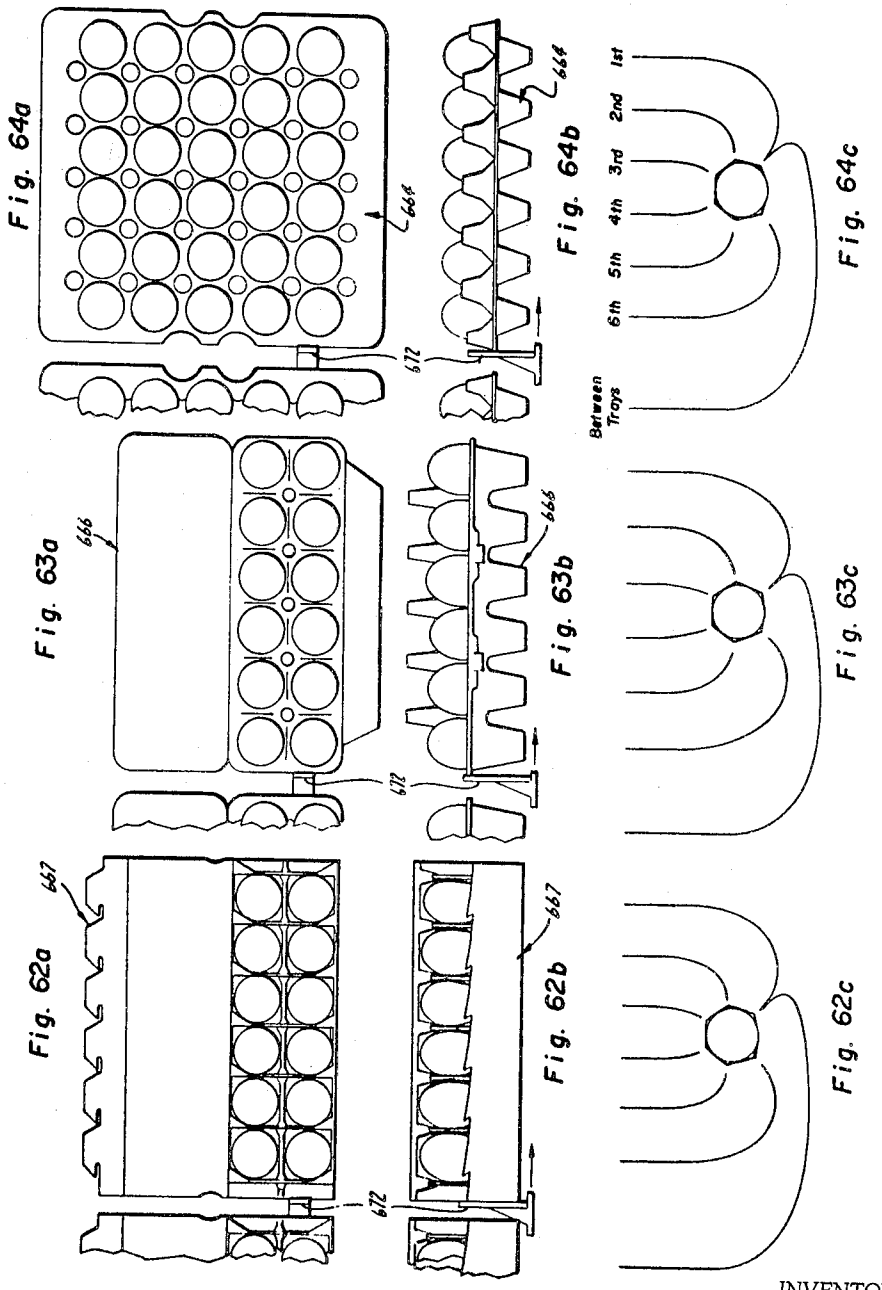

INVENTOR.
Alvoid V. Scollard
BY Alfred E. Comstock
Flehr and Swain
Attorneys

Dec. 21, 1965 A. V. SCOLLARD ETAL 3,224,580

EGG WEIGHING AND SORTING APPARATUS

Original Filed Feb. 14, 1961 49 Sheets-Sheet 37

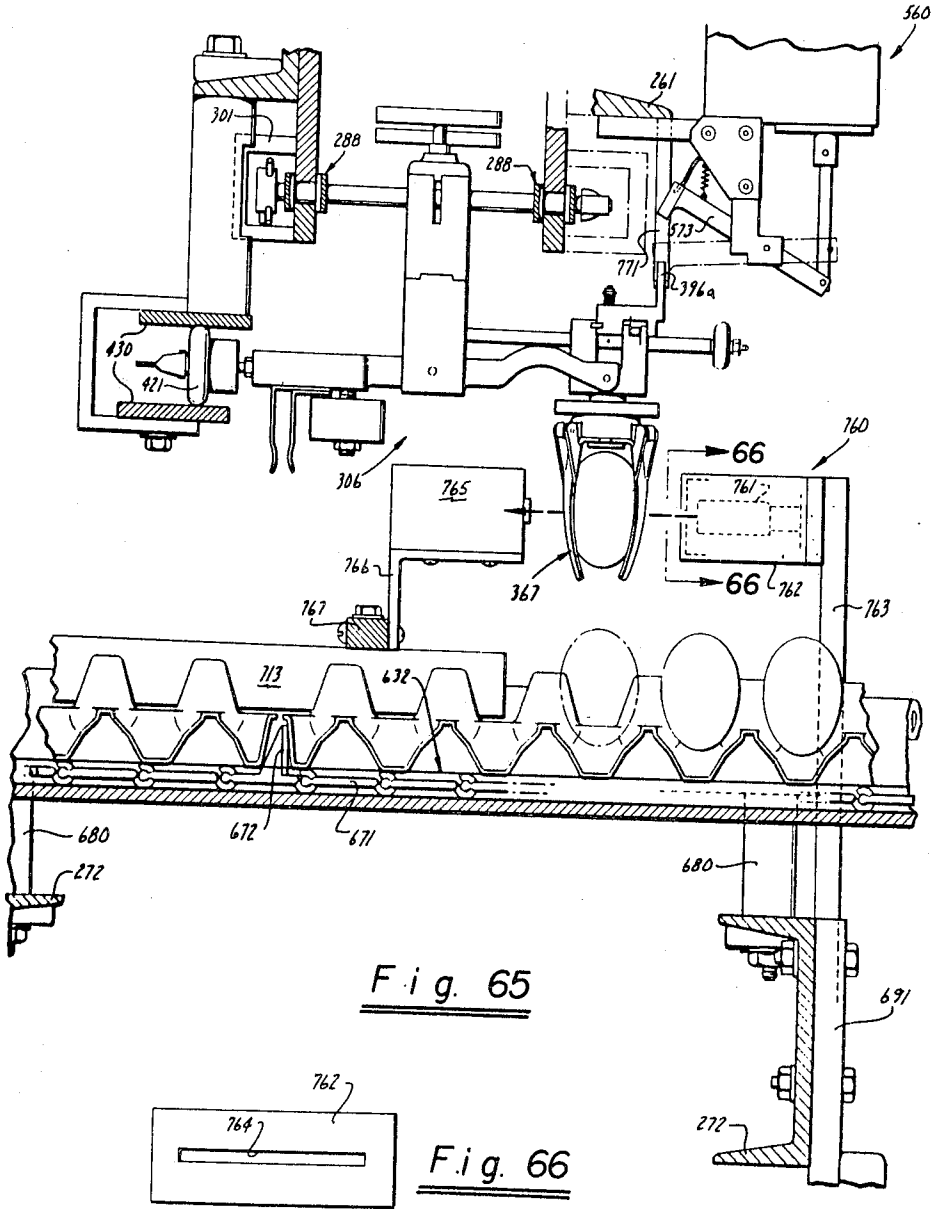

Fig. 65

Fig. 66

INVENTOR.
Alvoid V. Scollard
BY Alfred E. Comstock
Fleh & Swain
Attorneys

Dec. 21, 1965 A. V. SCOLLARD ETAL 3,224,580

EGG WEIGHING AND SORTING APPARATUS

Original Filed Feb. 14, 1961

49 Sheets-Sheet 38

Fig. 67

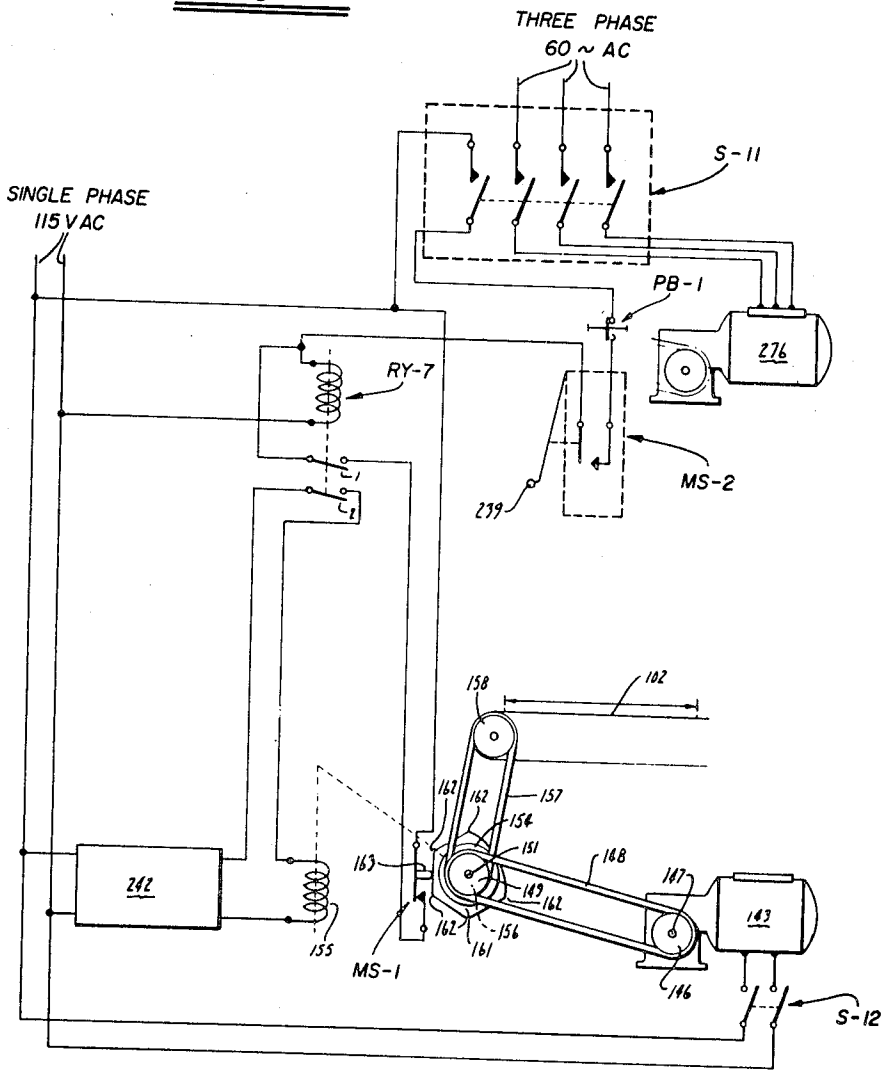

INVENTOR.
Alvoid V. Scollard
BY Alfred E. Comstock
Fleh. and Swain
Attorneys

Dec. 21, 1965 A. V. SCOLLARD ETAL 3,224,580

EGG WEIGHING AND SORTING APPARATUS

Original Filed Feb. 14, 1961 49 Sheets-Sheet 39

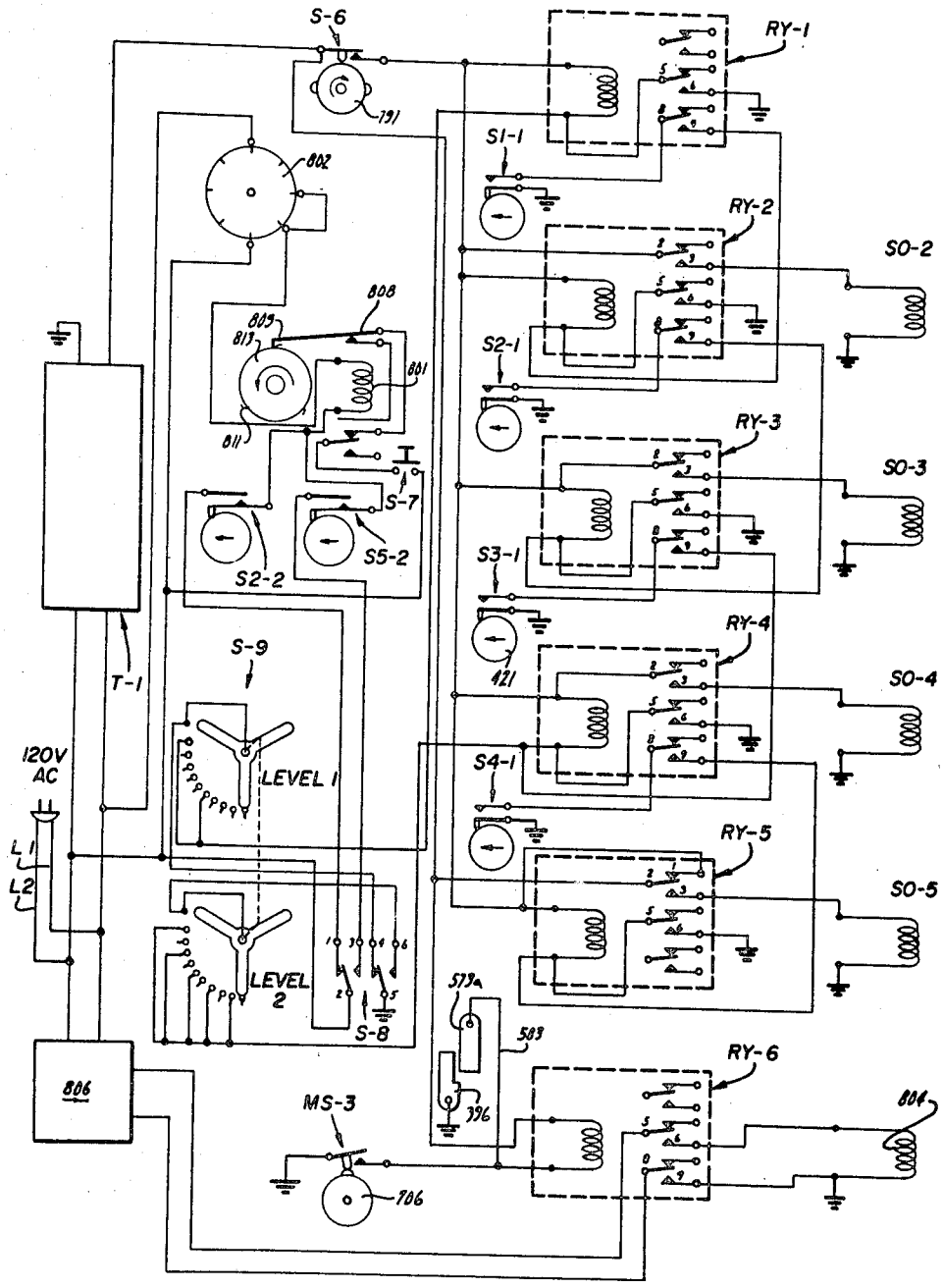

Fig. 68

INVENTOR.
Alvoid V. Scollard
BY Alfred E. Comstock

Attorneys

Dec. 21, 1965 A. V. SCOLLARD ETAL 3,224,580

EGG WEIGHING AND SORTING APPARATUS

Original Filed Feb. 14, 1961 49 Sheets-Sheet 40

Fig. 69

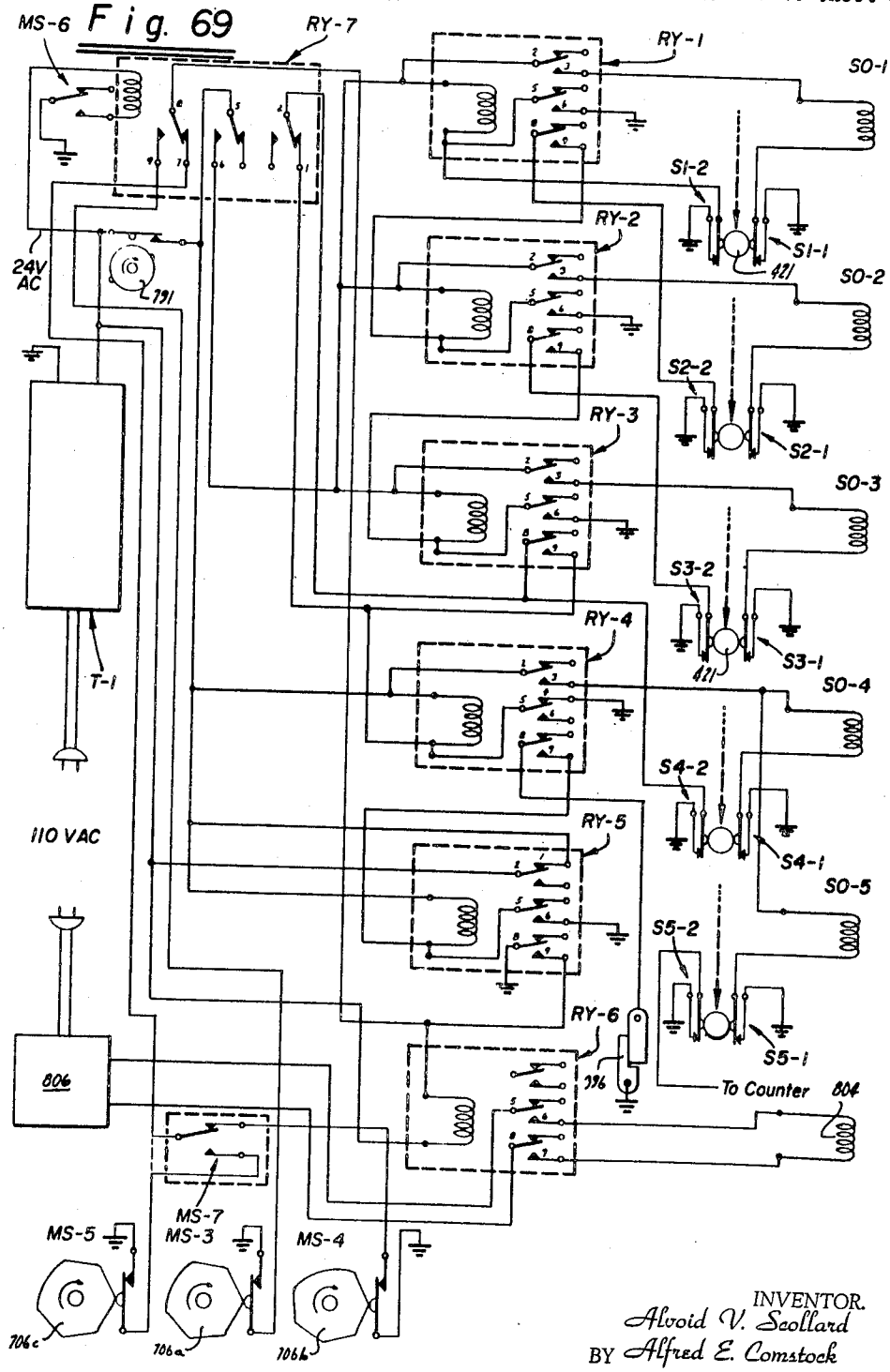

INVENTOR.
Alvoid V. Scollard
BY Alfred E. Comstock
Fleh and Swain
Attorneys

Dec. 21, 1965 A. V. SCOLLARD ETAL 3,224,580

EGG WEIGHING AND SORTING APPARATUS

Original Filed Feb. 14, 1961 49 Sheets-Sheet 41

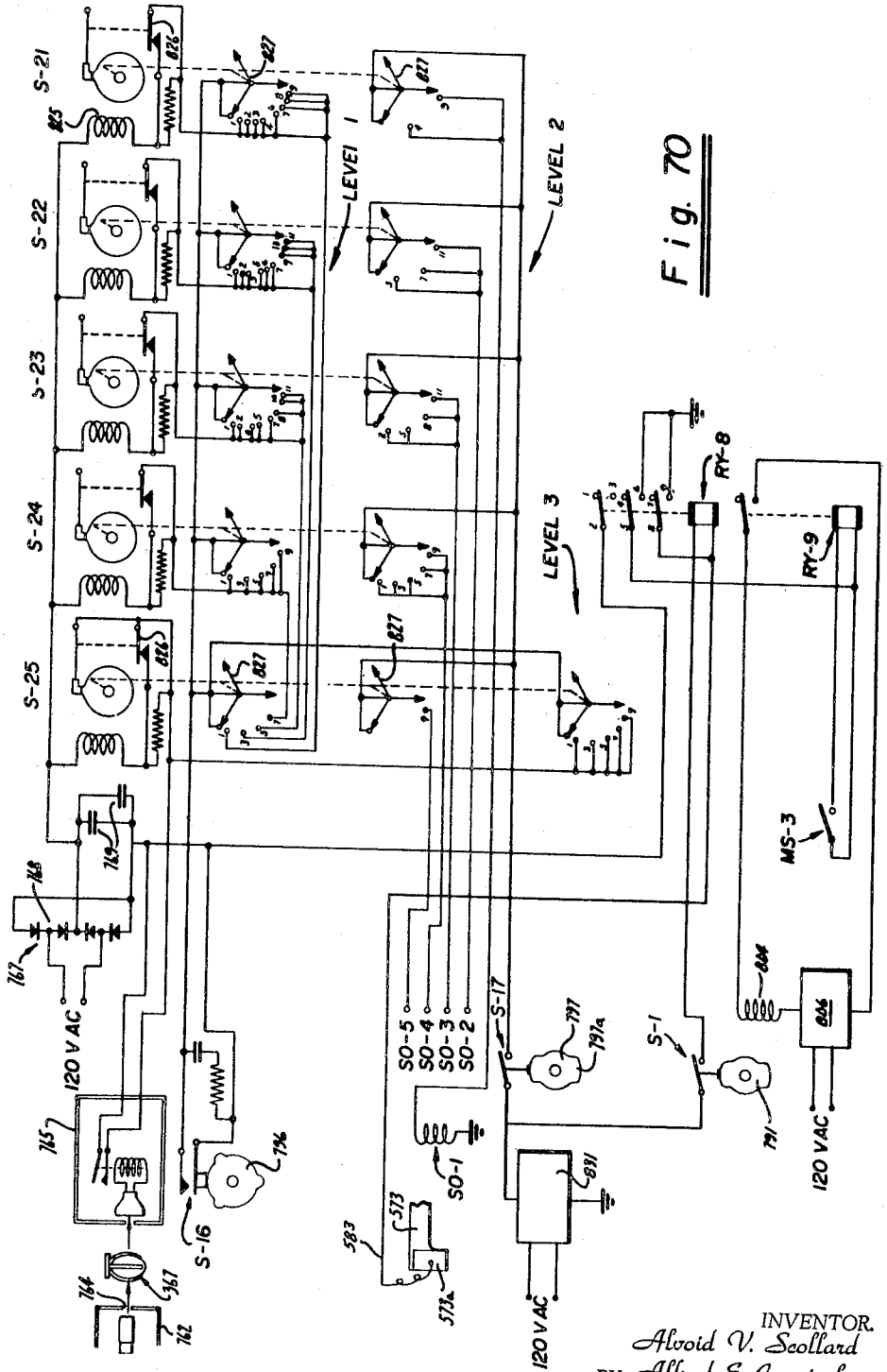

Fig. 70

INVENTOR.
Alvoid V. Scollard
BY Alfred E. Comstock
Flehr and Swain
Attorneys

Dec. 21, 1965 A. V. SCOLLARD ETAL 3,224,580

EGG WEIGHING AND SORTING APPARATUS

Original Filed Feb. 14, 1961

49 Sheets-Sheet 42

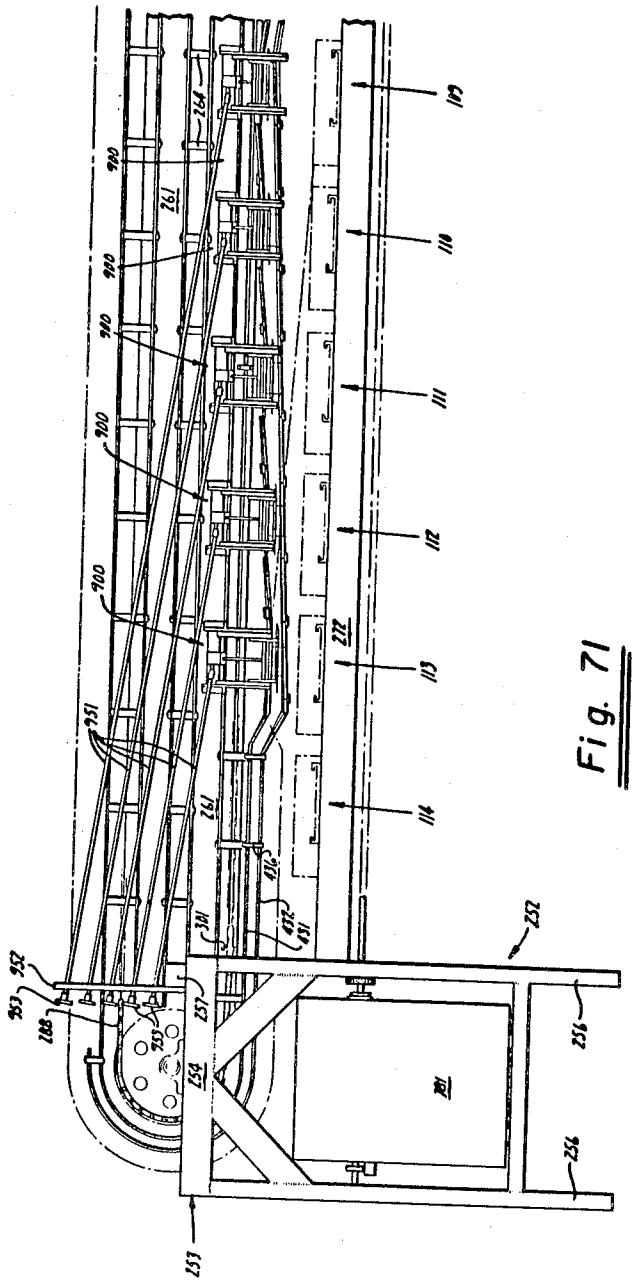

Fig. 71

INVENTOR.
Alvoid V. Scollard
BY Alfred E. Comstock
Fleh and Swain
Attorneys

Dec. 21, 1965 A. V. SCOLLARD ETAL 3,224,580

EGG WEIGHING AND SORTING APPARATUS

Original Filed Feb. 14, 1961 49 Sheets-Sheet 43

Fig. 72

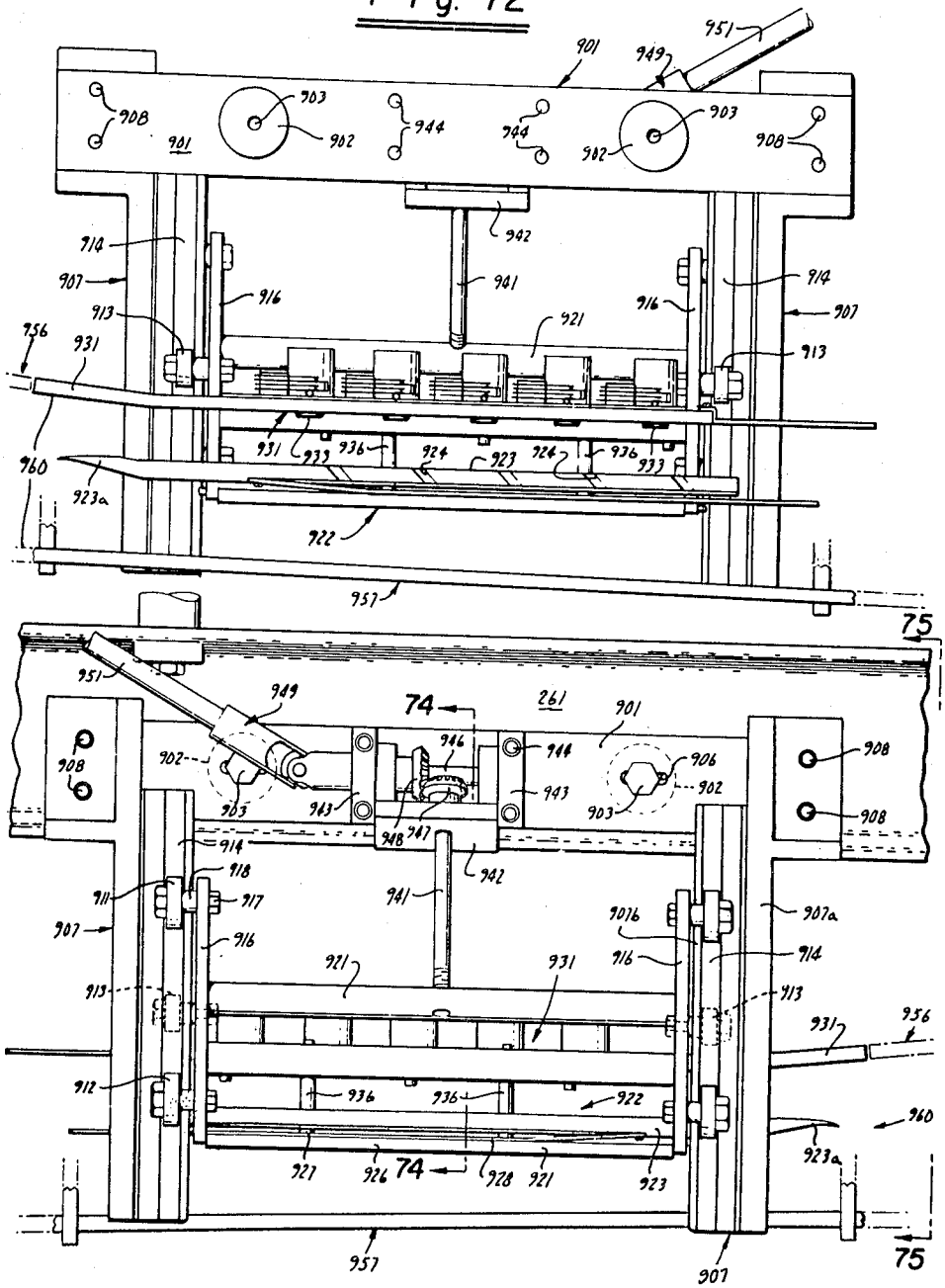

Fig. 73

INVENTOR.
Alvoid V. Scollard
BY Alfred E. Comstock
Fleh and Swain
Attorneys

Dec. 21, 1965 A. V. SCOLLARD ETAL 3,224,580

EGG WEIGHING AND SORTING APPARATUS

Original Filed Feb. 14, 1961 49 Sheets-Sheet 44

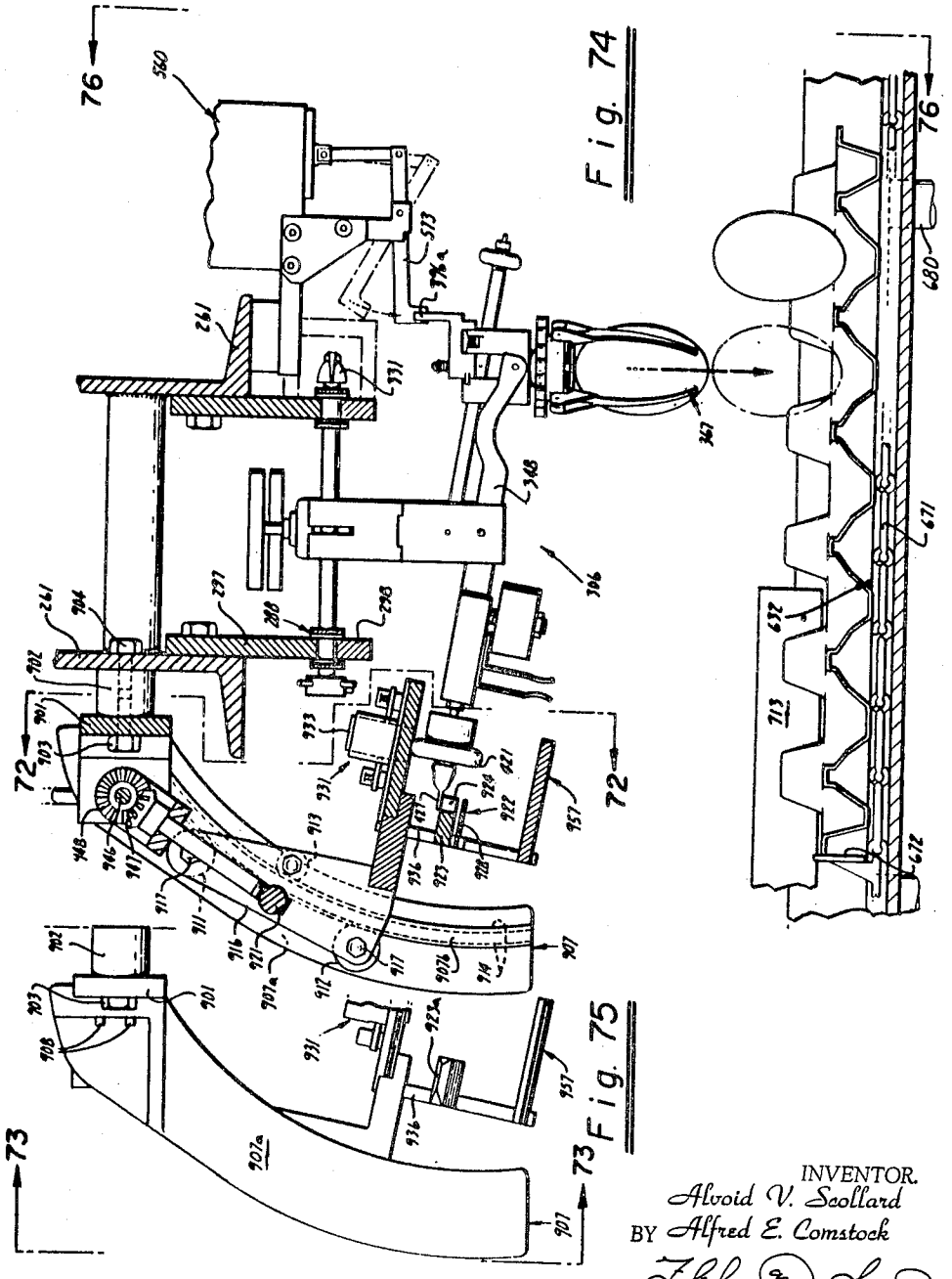

Fig. 74

Fig. 75

INVENTOR.
Alvoid V. Scollard
BY Alfred E. Comstock
Flehr Hohbach Test Albritton & Herbert
Attorneys

Dec. 21, 1965 A. V. SCOLLARD ETAL 3,224,580

EGG WEIGHING AND SORTING APPARATUS

Original Filed Feb. 14, 1961

49 Sheets-Sheet 45

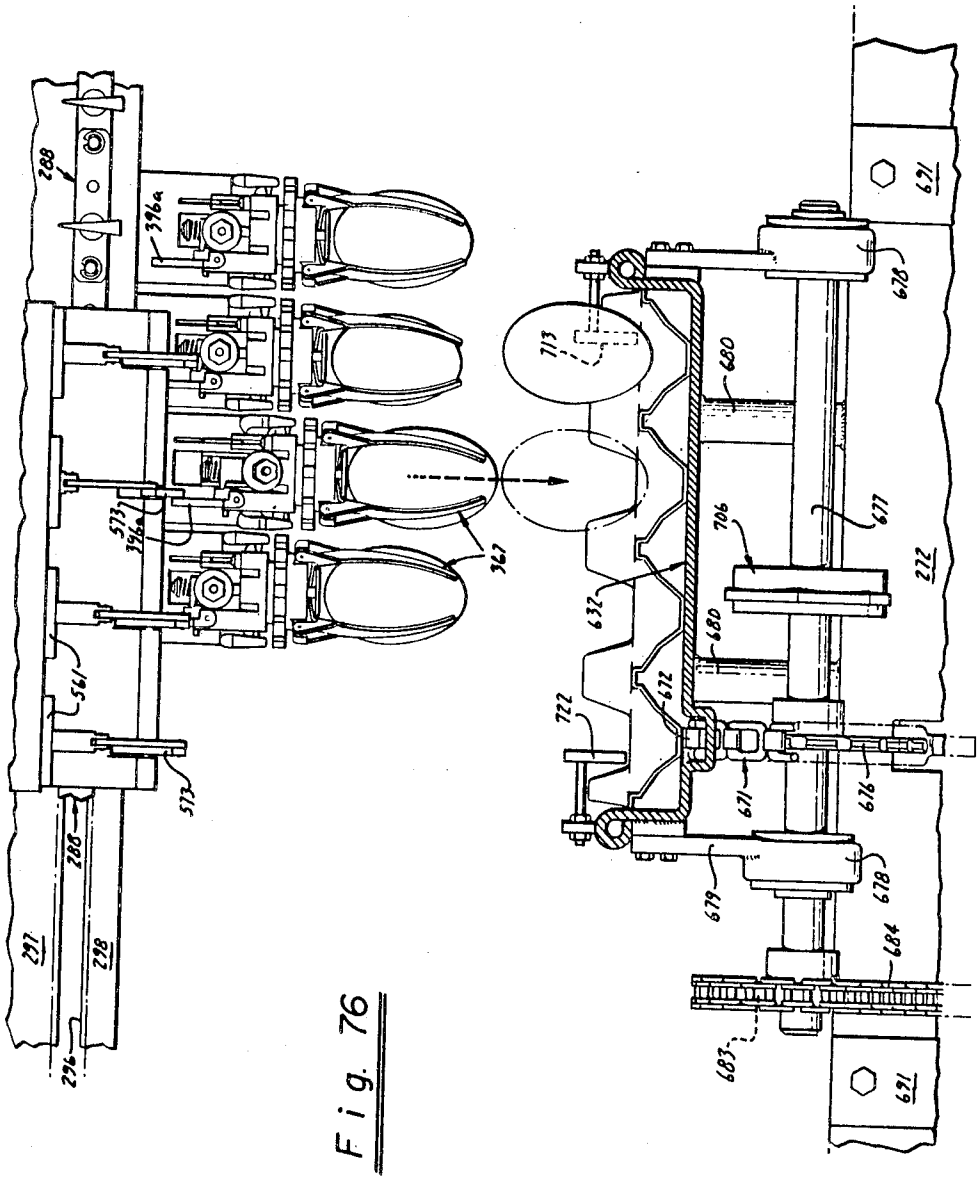

Fig. 76

INVENTOR.
Alvoid V. Scollard
BY Alfred E. Comstock
Flehr and Swain
Attorneys

Dec. 21, 1965 A. V. SCOLLARD ETAL 3,224,580

EGG WEIGHING AND SORTING APPARATUS

Original Filed Feb. 14, 1961 49 Sheets-Sheet 46

Fig. 78

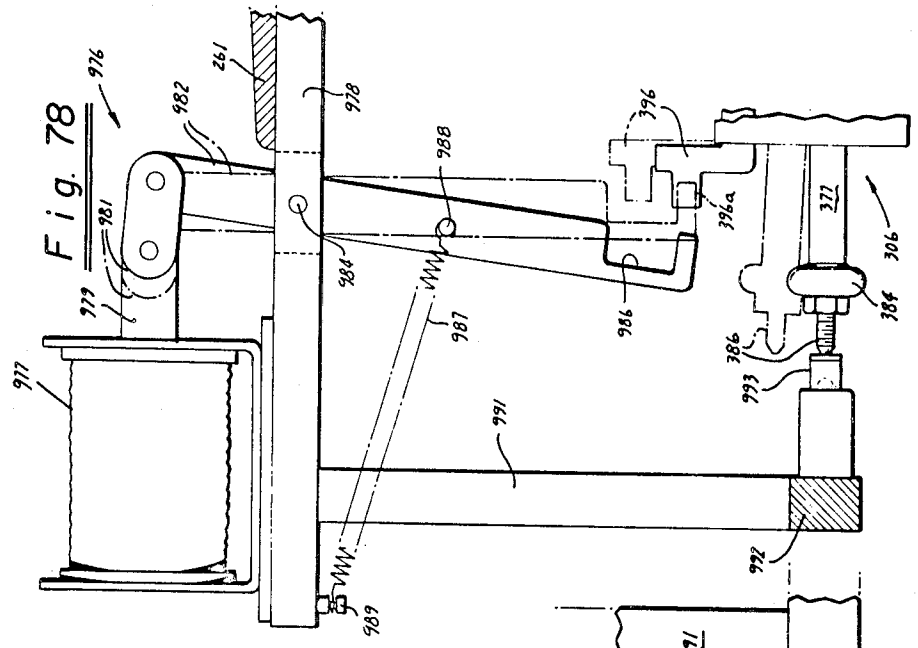

Fig. 77

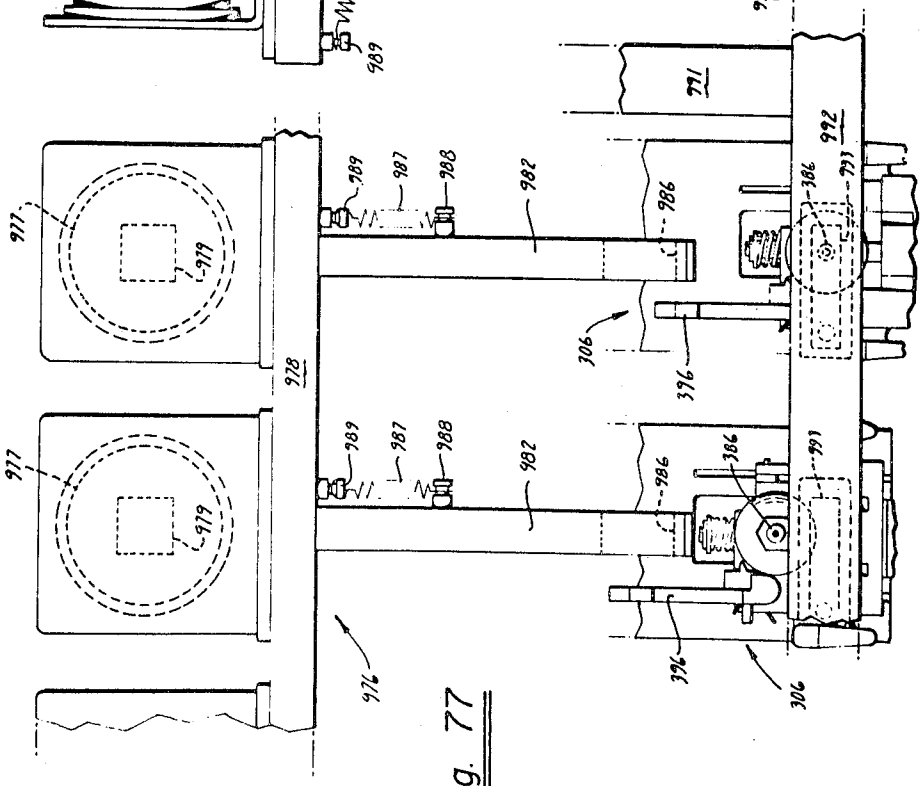

INVENTOR.
Alvoid V. Scollard
BY Alfred E. Comstock
Flehr and Swain
Attorneys

Dec. 21, 1965 A. V. SCOLLARD ETAL 3,224,580

EGG WEIGHING AND SORTING APPARATUS

Original Filed Feb. 14, 1961

49 Sheets-Sheet 47

Fig. 79

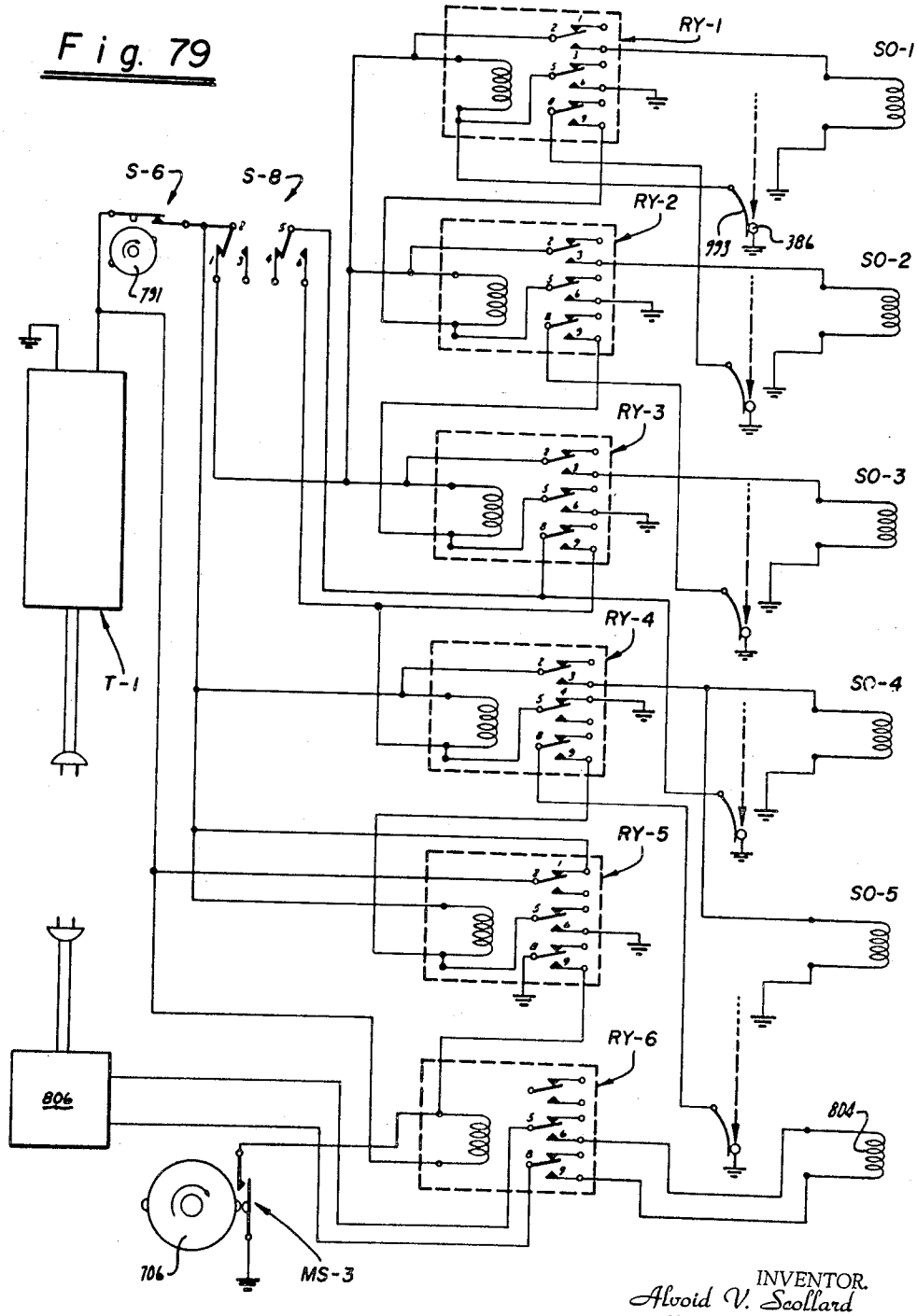

INVENTOR.
Alvoid V. Scollard
BY Alfred E. Comstock
Fleh. & Swain
Attorneys

Dec. 21, 1965 A. V. SCOLLARD ETAL 3,224,580

EGG WEIGHING AND SORTING APPARATUS

Original Filed Feb. 14, 1961

49 Sheets-Sheet 48

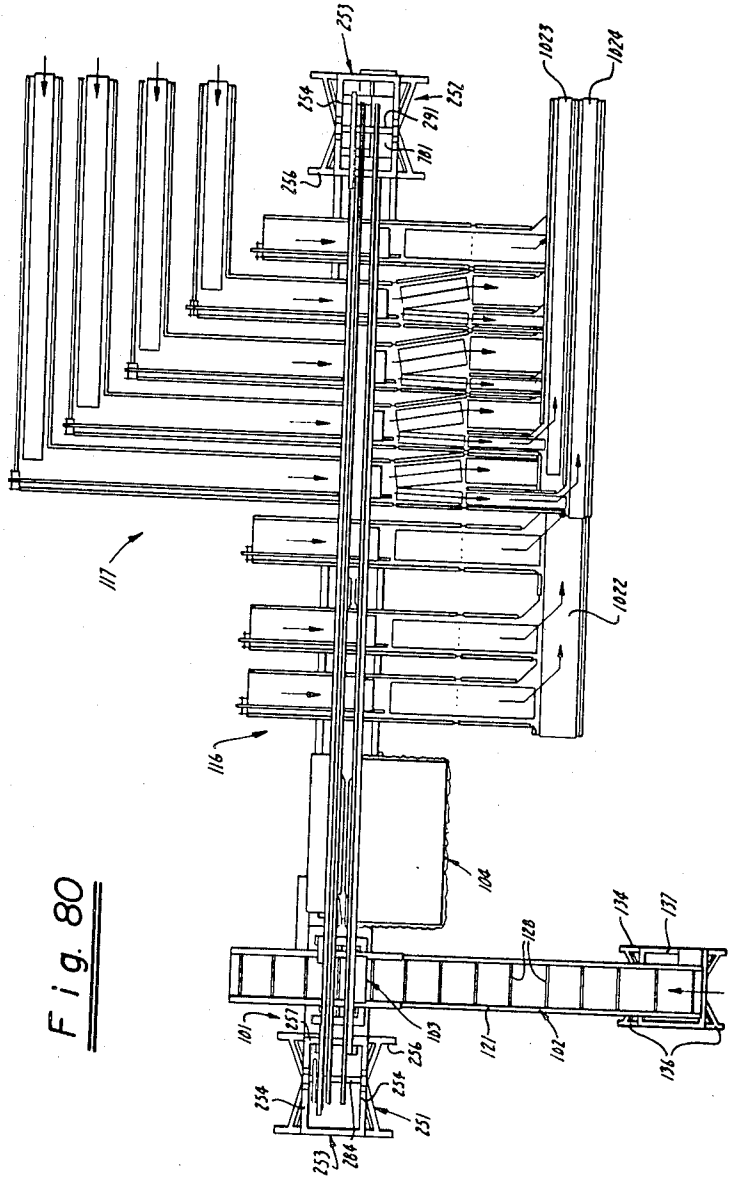

Fig. 80

INVENTOR.
Alvoid V. Scollard
BY Alfred E. Comstock
Fleh & Swain
Attorneys

Dec. 21, 1965 A. V. SCOLLARD ETAL 3,224,580

EGG WEIGHING AND SORTING APPARATUS

Original Filed Feb. 14, 1961 49 Sheets-Sheet 49

Fig. 81

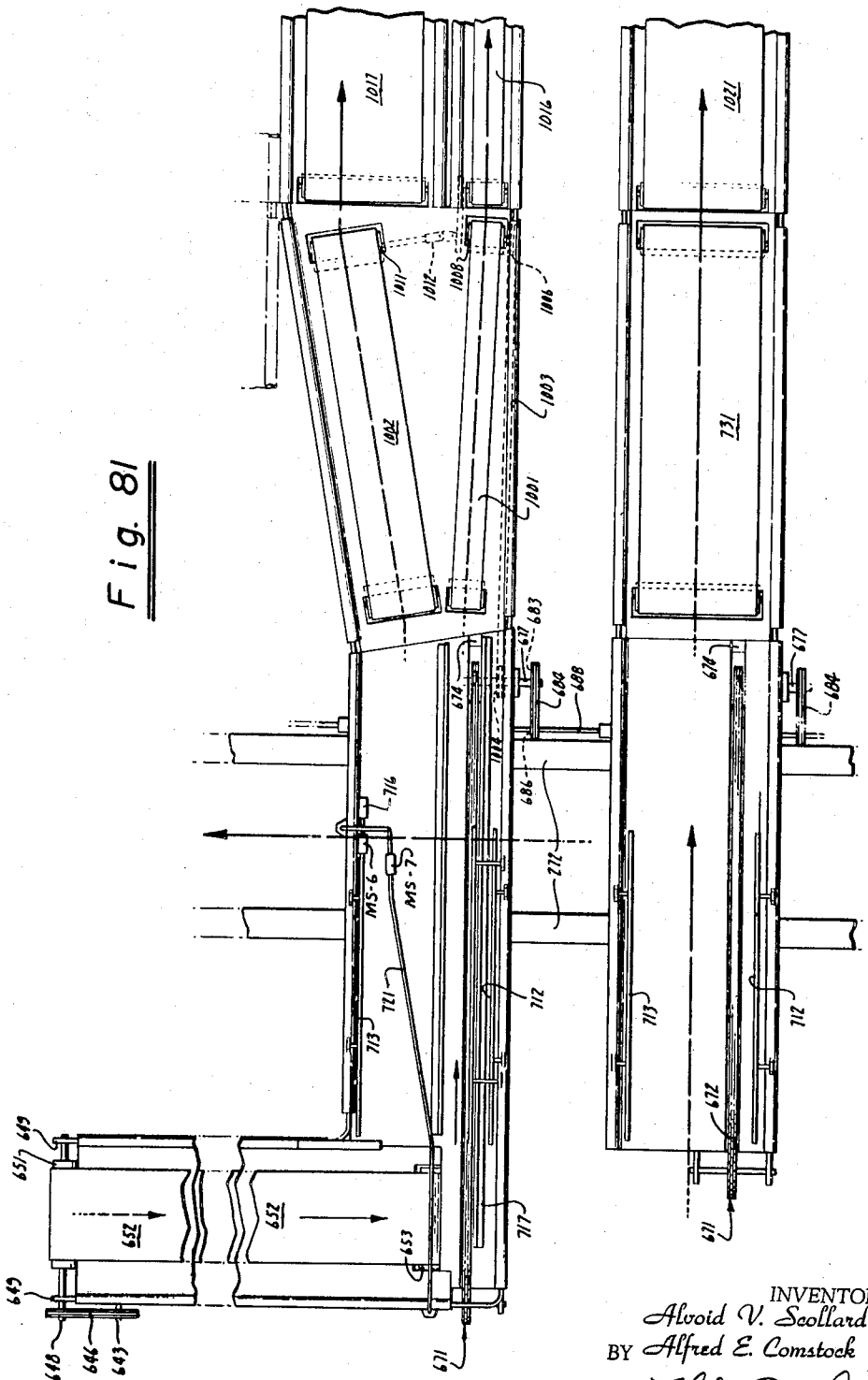

INVENTOR.
Alvoid V. Scollard
BY Alfred E. Comstock
Fleh, Cushman & Swain
Attorneys

United States Patent Office 3,224,580 Patented Dec. 21, 1965

3,224,580

EGG WEIGHING AND SORTING APPARATUS

Alvoid V. Scollard, Orinda, and Alfred E. Comstock, Greenbrae, Calif., assignors to Safeway Stores, Incorporated, Oakland, Calif., a corporation of Maryland

Original application Feb. 14, 1961, Ser. No. 89,275. Divided and this application Mar. 13, 1962, Ser. No. 179,344

41 Claims. (Cl. 209—121)

The present application is a division of our copending application Serial No. 89,275, filed Feb. 14, 1961.

This invention relates to handling and grading apparatus and more particularly to an egg handling and grading machine which will assist in the grading and packing of eggs in different quality and weight classifications.

As is well known to those skilled in the art of egg grading, eggs are commonly graded into six different weight classifications which are commonly called "jumbos"; "extra large"; "large"; "medium"; "small"; and "peewees." In addition to grading eggs by weight, it has been common to grade the eggs according to their quality by candling the eggs. Although machines and apparatus have been provided for automatically or semi-automatically grading eggs according to weight, it has been found to be very difficult to provide machines by which candling of the eggs can be accomplished rapidly and efficiently without handling the eggs. In addition, the machines or apparatus heretofore developed for this purpose have been unduly complicated and expensive, limiting their use to very large egg grading centers. There is, therefore, a need for a new and improved egg handling and grading apparatus which will overcome the above named disadvantages.

In general, it is an object of the present invention to provide an egg handling and grading machine which greatly facilitates the handling, grading and packing of eggs.

Another object of the invention is to provide an egg handling and grading machine of the above character in which the eggs are picked up automatically from the flats on which the eggs arrive from the egg producers.

Another object of the invention is to provide an egg handling and grading machine of the above character in which means is provided for automatically advancing the flats to the egg pick-up station.

Another object of the invention is to provide an egg handling and grading machine of the above character in which the eggs are picked up in the same vertical position as they arrive from the egg producer on the flats.

Another object of the invention is to provide an egg handling and grading machine of the above character in which the eggs are held in a vertical position during the egg handling, grading and packing operations.

Another object of the invention is to provide an egg handling and grading machine of the above character in which the eggs are rotated about their vertical axes during the candling operation.

Another object of the invention is to provide an egg handling and grading machine of the above character in which the eggs are maintained in a captive position all of the time that they are in the machine.

Another object of the invention is to provide an egg handling and grading machine of the above character in which manually operated means is provided for quickly classifying and segregating the eggs as to quality and character during the candling operation.

Another object of the invention is to provide an egg handling and grading machine of the above character in which the eggs of an inferior quality are automatically released or discharged from the machine.

Another object of the invention is to provide an egg handling and grading machine of the above character in which eggs of certain qualities are automatically placed directly in containers before the remaining eggs are graded or classified as to weight.

Another object of the invention is to provide an egg handling and grading machine of the above character in which the eggs after they are picked up are continuously advanced in one direction.

Another object of the invention is to provide an egg handling and grading machine of the above character in which the eggs having a predetermined quality are released or discharged during the continuous movement of the egg transport assemblies for the eggs.

Another object of the invention is to provide an egg handling and grading machine of the above character in which the eggs are displaced laterally into separate rows during the candling operation.

Another object of the invention is to provide an egg handling and grading machine of the above character in which the eggs are picked up, candled and graded according to weight in individual scale assemblies carried by a continuously moving transport chain assembly.

Another object of the invention is to provide an egg handling and grading machine of the above character in which the eggs during the weight grading operation are dropped directly from the scale assemblies into the egg receiving containers.

Another object of the invention is to provide an egg handling and grading machine of the above character in which the eggs can be packed automatically into different types of containers.

Another object of the invention is to provide an egg handling and grading machine of the above character in which automatic means is provided for feeding the egg receiving containers below the scale assemblies and removing the egg receiving containers after they have been filled.

Another object of the invention is to provide an egg handling and grading machine of the above character in which the apparatus for feeding the egg receiving cartons and for removing the egg receiving cartons is adapted for use with different types of egg receiving containers.

Another object of the invention is to provide apparatus of the above character in which the weight classification for any particular grading station and the weight of eggs within a classification can be changed during operation of the apparatus.

Another object of the invention is to provide an egg handling and grading machine of the above character in which a particularly novel scale assembly construction is utilized.

Another object of the invention is to provide an egg handling and grading machine of the above character in which particularly novel means is utilized for revolving the eggs in the candling station.

Another object of the invention is to provide an egg handling and grading machine of the above character which requires a minimum of personnel for its operation.

Another object of the invention is to provide an egg handling and grading apparatus of the above character which has a relatively high capacity and still is relatively economical to manufacture.

Another object of the invention is to provide an egg handling and grading apparatus of the above character which can be operated by relatively unskilled personnel.

Another object of the invention is to provide an egg handling and grading apparatus of the above character which is relatively compact and does not require a great amount of space.

Additional objects and features of the invention will appear from the following description in which the pre-

ferred embodiments have been set forth in detail in conjunction with the accompanying drawings.

Referring to the drawings:

FIGURE 1 is a side elevational view of an egg handling and grading machine incorporating our invention partly in cross-section taken along the line 1—1 of FIGURE 2;

FIGURE 2 is a top plan view of the egg handling and grading machine shown in FIGURE 1;

FIGURE 3 is an isometric view, partially in schematic form, showing the various drive assemblies utilized in the egg handling and grading machine;

FIGURE 4 is a side elevational view of a portion of the in-feed conveyor;

FIGURE 5 is a cross-sectional view taken along the line 5—5 of FIGURE 4;

FIGURE 6 is an enlarged detail view of the rear side of the left-hand end of our egg handling and grading machine looking along the line 6—6 of FIGURE 2 and particularly shows portions of the drive mechanisms utilized;

FIGURE 7 is an end elevational view of the left-hand end of our egg handling and grading machine as viewed in FIGURE 1 showing the main frame and the main drive mechanism;

FIGURE 8 is a cross-sectional view taken along the line 8—8 of FIGURE 7 and particularly shows the egg pick-up station;

FIGURE 9 is a cross-sectional view taken along the line 9—9 of FIGURE 8 and particularly shows the arrangement of the transfer motion gear assembly utilized in the main drive mechanism;

FIGURE 10 is a cross-sectional view taken along the line 10—10 of FIGURE 9;

FIGURE 11 is a rear elevational view of the right-hand end of the egg handling and grading machine looking along the line 11—11 of FIGURE 2;

FIGURE 12 is an enlarged detail view of a portion of our egg handling and grading apparatus shown in FIGURE 8;

FIGURE 13 is a cross-sectional view taken along the line 13—13 of FIGURE 12 showing one of the scale assemblies just before an egg is picked up by the scale assembly;

FIGURE 14 is a bottom plan view of the scale assemblies shown in FIGURE 12 looking along the line 14—14 of FIGURE 12;

FIGURE 15 is a top plan view of a portion of a plurality of scale assemblies shown in FIGURE 7;

FIGURE 16 is a cross-sectional view taken along the line 16—16 of FIGURE 13 showing portions of the scale assemblies;

FIGURE 17 is a cross-sectional view taken along the line 17—17 of FIGURES 13 and 16;

FIGURE 18 is a cross-sectional view taken along the line 18—18 of FIGURE 16;

FIGURE 19 is a cross-sectional view looking along the line 19—19 of FIGURE 17;

FIGURE 20 is a view similar to FIGURE 19 but showing the position of the selector shaft after it has passed the turning pin in the candling station;

FIGURE 21 is a view of a portion of the selector shaft looking along the line 21—21 of FIGURE 19;

FIGURE 22 is a cross-sectional plan view taken along the line 22—22 of FIGURE 16;

FIGURE 23 is a front elevational view looking along the line 23—23 of FIGURE 22;

FIGURE 24 is a rear elevational view in cross-section taken along the line 24—24 of FIGURE 22;

FIGURE 25 is a cross-sectional view showing the position of a scale assembly in the egg pick-up station;

FIGURE 26 is a cross-sectional view taken along the line 26—26 of FIGURE 12 and shows the position of a scale assembly immediately after an egg has been picked up;

FIGURE 27 is a cross-sectional view of a portion of the apparatus shown in FIGURE 6 and shows the position of various parts of the machine just before the eggs enter the candling station;

FIGURE 28 is a cross-sectional view similar to FIGURE 27 but showing the position of various parts of the machine while the eggs are in the candling station;

FIGURE 29 is a cross-sectional view taken along the line 29—29 of FIGURE 27 and shows the positions of the cam wheels entering and in the candling station;

FIGURE 30 is a cross-sectional view taken along the line 30—30 of FIGURE 27 and shows the positions of the selector shafts and mounting blocks of the scale assemblies entering and in the candling station;

FIGURE 31 is a front elevational view in cross-section taken along the line 31—31 of FIGURE 32 and particularly shows the construction of the scale assemblies and also shows the position of the scale beam assemblies while in the candling station;

FIGURE 32 is a plan view in cross-section taken along the line 32—32 of FIGURE 31;

FIGURE 33 is a view corresponding to FIGURE 29 and shows the positions of the cam wheels as they leave the candling station;

FIGURE 34 is a view similar to FIGURE 30 and shows the positions of the selector shafts and mounting blocks as the eggs leave the candling station;

FIGURE 35 is a cross-sectional view taken along the line 35—35 of FIGURE 1 showing the position of the scale assemblies in the blood drop station;

FIGURE 36 is a cross-sectional view taken along the line 36—36 of FIGURE 1 showing the position of the scale assembly in the commercial drop station;

FIGURE 37 is a front elevational view looking along the line 37—37 of FIGURE 36;

FIGURE 38 is an enlarged detail view of the portion shown within the line 38—38 of FIGURE 36;

FIGURE 39 is a view similar to the view shown in FIGURE 33 showing the position of the cam wheels after the scale assemblies have passed through the commercial drop station;

FIGURE 40 is a view similar to FIGURE 34 showing the position of the blocks after the eggs have passed through the commercial drop station;

FIGURE 41 is a cross-sectional view taken along the line 41—41 of FIGURE 39;

FIGURE 42 is a rear elevational view looking along the line 42—42 of FIGURE 40;

FIGURE 43 is a cross-sectional view taken along the line 43—43 of FIGURE 1 showing the operation of a scale assembly carrying an extra large egg white in the extra large section;

FIGURE 44 is a rear elevational view looking along the line 44—44 of FIGURE 43 and shows a portion of the extra large station with the switch plate assembly and the splitter or slicer bar;

FIGURE 45 is a side elevational view of a scale assembly showing the complete range through which it may move and the weight range for each particular grade of eggs;

FIGURE 46 is a top plan view of the switch plate assembly utilized in the grading stations taken along the line 46—46 of FIGURE 44;

FIGURE 47 is a side elevational view of the slicer or splitter bar and the switch plate assembly taken along the line 47—47 of FIGURE 46;

FIGURE 48 is a top plan view of the slicer bar looking along the line 48—48 of FIGURE 47;

FIGURE 49 is a cross-sectional view taken along the line 49—49 of FIGURE 47;

FIGURE 50 is a cross-sectional view taken along the line 50—50 of FIGURE 47;

FIGURE 51 is a front elevational view of the solenoid assembly utilized at the extra large grading station;

FIGURE 52 is a side elevational view of the solenoid assembly taken along the line 52—52 of FIGURE 51;

FIGURE 53 is a view looking along the line 53—53 of FIGURE 52;

FIGURE 54 is a view looking along the line 54—54 of FIGURE 52;

FIGURE 55 is a front elevational view of the portion of the apparatus shown in FIGURE 43;

FIGURE 56 is a top plan view of the stub and main conveyor assemblies within the line 56—56 of FIGURE 2;

FIGURE 57 is a side elevational view looking along the line 57—57 of FIGURE 56;

FIGURE 58 is a side elevational view looking along the line 58—58 of FIGURE 56;

FIGURE 59 is a cross-sectional view taken along the line 59—59 of FIGURE 56;

FIGURE 60 is a side elevational view looking along the line 60—60 of FIGURE 56;

FIGURE 61 is a cross-sectional view taken along the line 61—61 of FIGURE 56;

FIGURES 62A, 62B, 62C, 63A, 63B, 63C, 64A, 64B and 64C are diagrams showing the utilization of different types of egg receiving containers and how they are coordinated with the operation of the corresponding portions of the cam wheel utilized on the main conveyors;

FIGURE 65 is a cross-sectional view taken along the line 65—65 of FIGURE 1 showing the peewee station;

FIGURE 66 is a view of the long housing in the peewee station looking along the line 66—66 of FIGURE 65;

FIGURE 67 is a circuit diagram with certain portions of the apparatus schematically illustrated showing the operation of the egg in-feed conveyor;

FIGURE 68 is a circuit diagram with certain parts schematically illustrated showing the operation of the commercial station;

FIGURE 69 is a circuit diagram with certain parts schematically illustrated showing the operation of an egg weight grading station;

FIGURE 70 is a circuit diagram with certain parts schematically illustrated showing the operation of the peewee station;

FIGURE 71 is a rear elevational view similar to FIGURE 11 showing the use of adjustable weight classifying means;

FIGURE 72 is a front elevational view of one of the grading stations taken along the line 72—72 of FIGURE 74 showing in detail the adjustable means of FIGURE 67;

FIGURE 73 is a rear elevational view looking along the line 73—73 of FIGURE 75;

FIGURE 74 is a cross-sectional view taken along the line 74—74 of FIGURE 73;

FIGURE 75 is a side elevational view taken along the line 75—75 of FIGURE 73;

FIGURE 76 is a front elevational view in cross-section taken along the line 76—76 of FIGURE 74;

FIGURE 77 is an alternative embodiment of a solenoid mechanism for use in our egg handling and grading machine;

FIGURE 78 is a side elevational view of the solenoid mechanism shown in FIGURE 77;

FIGURE 79 is a circuit diagram of the circuitry utilized with the solenoid mechanism shown in FIGURES 77 and 78;

FIGURE 80 is a top plan view of the egg handling and grading machine similar to the top plan view shown in FIGURE 2 with the exception that a modified conveyor system is utilized; and

FIGURE 81 is a detailed view of two of the conveyors shown in FIGURE 80.

In general

A general overall view of our egg handling and grading apparatus is shown in FIGURES 1 and 2. It consists of a continuously moving transport or conveyor assembly **101** to which eggs or other articles to be handled and graded are supplied by a feed-in conveyor **102**. The eggs are picked up from the feed-in conveyor at an egg pick-up station **103**. The eggs, after they have been picked up, travel into a candling station **104**. The eggs, after they leave the candling station, pass into a blood drop station **106** and then to a check drop station **107** and a commercial drop station **108**. The eggs are thereafter passed into six weight grading stations **109–114** which are arranged in any desired manner but preferably are arranged from large to small or small to large as, for example, they may be arranged as jumbos, extra large, large, medium, small and peewee.

The eggs may be removed from the various stations in any suitable manner; for example, in the check, commercial, jumbo and peewee stations, the eggs may be removed by stub conveyors **116**, whereas in the weight grading stations with a larger volume of eggs they can be removed with conveyor assemblies **117**.

Egg feed-in conveyor

The egg feed-in conveyor is shown in detail in FIGURES 2, 4, 5, 7 and 8. The feed-in conveyor, as shown in these drawings, consists of spaced horizontal U-shaped channel members **121** lying in a substantially horizontal plane. A shaft **122** is rotatably mounted at one end of the channel members **121**, and a shaft **123** is rotatably mounted at the other end of the channel members **121**. Each of the shafts carries a pair of sprockets **124** disposed within the channel members **121**. A pair of endless roller chains **126** and **127** pass over the sprockets and extend the length of the channel members **121**. The endless roller chains **126** and **127** are provided with interconnecting rods **128** which extend transversely of the conveyor and are spaced apart a predetermined distance so that they are adapted to receive egg pallets or trays of a predetermined size as hereinafter described.

A top or floor plate **129** is mounted on the top portions of the channel members **121** and serves to provide a surface over which the upper run of the endless chains travel carrying with them the transverse pusher or advancing rods **128**. A bottom plate **131** is secured to the bottom portions of the channel members **121** and serves to enclose the bottom runs of the endless chains of the conveyor. A pair of L-shaped protective members **132** is secured to the channel members **121** and overlies the upper runs of the endless chains as shown particularly in FIGURE 5. They serve as a protective covering over the chains to prevent the clothes of an operator from becoming entangled within the chain.

The feed-in conveyor is supported in any suitable manner in a generally horizontal plane and at any desired height. It, however, is generally desirable to support the conveyor at waist height to eliminate bending and stooping by the operator as he places trays on the conveyor as hereinafter described. The inlet or outer end of the conveyor is supported by a framework **134** which consists of four inclined legs **136** upon which is mounted on a rectangular frame **137**. A rod **138** is mounted on the rectangular frame **137** and extends in a direction transverse of the conveyor. A trunnion **139** is rotatably mounted on the rod **138** and has a swivel member **141** rotatably mounted thereon. The trunnion **139** permits rotation about a horizontal axis, whereas the swivel member **141** permits rotation about a vertical axis. The swivel member **141** is secured to the in-feed end of the conveyor and permits sidewise and up and down movement of the forward end of the conveyor as hereinafter described. A set screw **140** in the trunnion **139** engages a groove **138***a* in the rod **138** and prevents sidewise slipping of the trunnion **139** on the rod **138**. Similarly, a set screw **142** in the trunnion **139** engages a groove **145***a* in a pin **145** fixed in the swivel member **141**.

Drive means for operating the conveyor is mounted on the framework **134** and consists of a gear motor **143** mounted upon a bed plate **144** secured between the legs

136 of the framework 134. A sprocket wheel 146 is mounted on the output shaft 147 of the gear motor 143 and drives a chain 148. The chain 148 drives a sprocket wheel 149 fixed to a shaft 151 rotatably mounted in pillow blocks 152 mounted on horizontal frame members 153 secured to the legs 136. The shaft 151 is comprised of two parts: 151*a* and 151*b* which are adapted to be interconnected by an electric clutch 154 of conventional construction which is provided with a coil 155 (see FIGURE 67). Shaft 151*a*, therefore, corresponds to a driving shaft, whereas shaft 151*b* corresponds to a driven shaft. A large sprocket wheel 156 is affixed on the shaft 151*b* and drives a chain 157. The chain 157 drives a smaller sprocket wheel 158 affixed to the shaft 122 and, therefore, serves to drive the conveyor comprised of the roller chains 126 and 127 and interconnecting advancing rods 128.

A cam wheel 161 is mounted on the outer end of the shaft 151*b* and is provided with a plurality of raised portions 162 spaced in a predetermined manner about the wheel to cause proper advancement of the conveyor as hereinafter described. A microswitch MS–1 is mounted on the frame 134 and is provided with an operating arm 163 that serves as a cam follower which engages the cam wheel 161.

Means is provided for mounting the other end of the feed-in conveyor 102 in the main frame 164 of the transport or conveyor assembly 101 to provide a path of movement for the conveyor at the egg pick-up station which is substantially triangular in form as hereinafter described. The means for moving the feed-in conveyor in this fashion at the pick-up station consists of a transfer gear assembly 165 disposed within a box or housing 166 which is mounted on the main frame 164. The transfer motion gear housing 166 is substantially rectangular in shape and has supported thereon in a manner hereinafter described a rectangular box-like frame 167. Four lift rods 168 extend vertically out of the transfer motion gear housing 166 adjacent the four top corners of the housing 166 and have affixed in the upper ends thereof a pair of horizontal rods 169 which are slidably mounted in sleeve bearings 171 provided in the side walls of the rectangular box-like frame 167 (see FIGURE 8).

A horizontal tubular member 172 is affixed to the frame 167 between the pair of horizontal rods 169 and has rotatably mounted thereon a trunnion member 173. A swivel member 174 is rotatably mounted on the trunnion member for rotation about a substantially vertical axis and is affixed to the feed-in conveyor at a point underlying the pick-up station. This trunnion and swivel connection permits rotational movement of this portion of the feed-in conveyor about a vertical axis and about a horizontal axis in the same manner as the front end of the egg feed-in conveyor. A pair of pusher rods 176 extend horizontally from out of the sides of the transfer motion gear housing 166 and have rollers 178 mounted on the ends thereof which engage the side walls of the box-shaped frame 167.

The transfer motion gear assembly 165 provided within the gear housing 166 for causing vertical movement of the vertical rods 168 and horizontal movement of the pusher rods 176 is shown particularly in FIGURES 9 and 10. The transfer motion gear assembly is driven by a drive shaft 181 which extends through the gear housing 166 and is rotatably mounted in the side walls thereof. Spur gears 182, 183 and 184 are affixed to the shaft 181. Spur gear 182 drives a large spur gear 185 affixed to a shaft 186 extending across the transfer gear housing 166 parallel to the shaft 181 and rotatably mounted in the side walls of the housing by ball bearing assemblies 187. Four cams 188 are affixed to the shaft 186 and engage cam followers 189 provided intermediate the ends of rocker arms 191. The four rocker arms 191 are rotatably mounted in pairs on rods 192. The rods 192 extend across the housing 166 parallel to the shafts 181 and 186 and are affixed to the side walls of the housing by a suitable means such as cap screws 193. The other ends of the rocker arms 191 are pivotally connected to the vertical lift rods 168 in a suitable manner such as by means of a roller assembly 196 affixed to the lift rod on a flat 197 provided on the lift rod and journalled in a hole 198 provided in the rocker arm. The arrangement of the cams 188 is such that as the drive shaft 181 is rotated, the lift rods 168 are raised and lowered in unison to thereby raise and lower the frame 167.

The spur gears 183 and 184 operate means for extending and retracting the pusher rods 176. This means consists of spur gears 201 driven by gears 183 and 184 and which are affixed to the shaft 186. Each of the spur gears 201 drives a pair of small spur gears 206 and 207 affixed to shafts 208 and 209 rotatably mounted within the housing 166. It will be noted that the gearing arrangement is such that the gears 206 and 207 are driven in the same direction. Two pairs of sprocket wheels 211 and 212 are affixed to the shafts 208 and 209 and are driven thereby. An endless chain 213 interconnects each pair of sprocket wheels 211 and 212. The two chains 213 drive a connecting pin 214.

The pin 214 drives a Scotch yoke 221. The Scotch yoke 221 consists of a follower block 222 mounted on the pin 214 and slidably disposed within a vertical slot 223 provided in a larger block 224 slidably mounted for horizontal movement in a plate 226 affixed to the bottom wall of the gear housing 166. The pusher rods 176 are secured to the block 224. It is readily apparent that as the chains 213 travel in a counter-clockwise direction as viewed in FIGURE 10, rectilinear motion in a horizontal direction will be imparted to the pusher rods 176 by the Scotch yoke 221 to first extend one pusher rod while retracting the other pusher rod and then extending the other pusher rod while retracting the first named pusher rod.

The lift rods 168 have their ends within the housing slidably mounted in supporting members 199 secured to the side walls of the transfer gear housing 166 so that the movement of the rods 168 will be in a vertical direction.

The transfer gear mechanism 165 is timed in such a manner that the motion produced on the pick-up end of the feed-in conveyor 102 is substantially triangular in shape as shown in the line diagrams 231 in FIGURE 8 as hereinbefore explained. In other words, there is a diagonal raising of the frame 167 as the frame 167 is raised by the lift rods 168 and as the frame 167 is moved to the right by the pusher bars 176 at a uniform rate as shown in portion 231*a* of line diagram 231. During the remainder of the motions, there is a diagonal lowering and a straight line return as shown in portions 231*b* and 231*c*, respectively, of the line diagram. The pusher rods 176 are always in engagement with opposite sides of the frame 167 as shown particularly in FIGURE 10 so that a smooth uniform motion is imparted to the feed-in conveyor.

The transfer motion gear housing 166 is also provided with means for driving other portions of our egg handling and grading apparatus and consists of a bevel gear 234 which is affixed to the shaft 181. Bevel gear 234 drives another bevel gear 236 affixed to a machine drive shaft 237 rotatably mounted in the housing 166 and extending out from the housing at right angles to the shafts 181 and 186.

A microswitch MS–2 is mounted on the main frame 164 and is provided with an operating arm 239 which is adapted to be engaged by the box-like frame 167 as the frame 167 is reciprocated back and forth for a purpose hereinafter described. A pushbutton PB–1 is also mounted on the main frame 164 to permit the egg feed-in conveyor to be stopped by the operator in the candling station as hereinafter described.

A control box 241 is mounted on the framework 134 at the far end of the egg feed-in conveyor. The control

box 241 contains an on-off switch S–7 (see FIGURE 67) and a control 242 for the electric clutch 154.

Main transport or conveyor assembly

The main conveyor assembly consists of a main frame 164 which extends along the length of the main conveyor run. The main frame consists of a pair of four-legged stands 251 and 252 with the stand 251 being at one end, or the left end, of the main conveyor, and the stand 252 being at the other end, or the right end, of the main conveyor as viewed from FIGURE 1. The stands are formed of a substantial material such as channel iron so that they can support substantially all of the weight of the entire egg handling and grading apparatus. Each of the stands 251 and 252 is provided with a framework 253 lying in a generally horizontal plane. The framework 253 is comprised of a pair of side members 254 extending in a direction longitudinal of the main conveyor and secured to the four inclined legs 256 of the stand. The framework 253 also includes a cross member 257 mounted on top of the side members 254 and extending transversely of the main conveyor.

The main frame 164 also includes a bridge-type framework which is supported by the two stands 251 and 252 and provides a rigid support for the apparatus mounted between the two stands as hereinafter described. This bridge-type framework is comprised of four U-shaped channel members 261 which are arranged in two pairs of vertically spaced members lying in horizontal planes with each pair being spaced apart horizontally to thereby provide a rectangular-like arrangement extending between the two support stands 251 and 252. As shown particularly in FIGURE 7, the channels are arranged so that their flanges face outwardly. The top pair of channel members rest upon the cross members 257 of the stands 251 and 252 and have their lower flanges secured thereto by suitable means such as cap screws 262. The lower pair of channel members 261 have their upper flanges secured to the cross members 257 in a similar manner. A uniform vertical spacing is maintained between the upper and lower pairs of channel members by spacers 264 secured to the lower flanges of the upper channel members and the upper flanges of the lower channel members by cap screws 266. Means is also provided for maintaining the horizontal spacing between the pairs of channel members and consists of spacers 267 which are secured to the opposed channels by suitable means such as cap screws 268.

The stand 251 is provided with an extension (see FIGURES 6 and 8) which consists of a pair of spaced vertical legs 271 which carry a pair of horizontally spaced U-shaped channel members 272 which lie in a horizontal plane parallel to the channel members 261. The other ends of the channel members 272 are secured to the stand 252. The channel members 272 are arranged so that their flanges face inwardly as shown. A pair of longitudinal members 273 are mounted between the legs 271 and the legs 256 of the stand 251 and provide a support for the transfer motion gear housing 166.

Drive means for the main conveyor is mounted in the stand 251. This drive means can take any suitable form and, as shown, may be a combination unit 276 consisting of a three phase 220 volt A.-C. motor which is provided with variable speed control. The output shaft of the combination unit 276 has fixed thereto a large sprocket wheel 277 and a small sprocket wheel 278. The large sprocket wheel 277 drives an endless chain 279 which drives a sprocket 281 (see FIGURE 3) connected to the main drive shaft 181 for the transfer motion gear assembly 165. The small sprocket wheel 278 drives an endless chain 282. The endless chain 282 serves as the drive for the main conveyor. It drives a large sprocket wheel 283 affixed to a shaft 284 rotatably mounted on top of the stand 251 by a pair of pillow blocks 286.

A pair of large spaced apart sprocket wheels 287 are affixed to the shaft 284 and drive a pair of long endless chains 288. The endless chains 288 travel over another pair of large sprocket wheels 289 affixed to a shaft 291 rotatably mounted upon the stand 252 by pillow blocks 292. The sprocket wheels 287 and 289 are positioned in such a manner that the chains travel in continuous endless parallel paths lying in substantially horizontal planes. The upper runs of the endless chains 288 are carried and guided by a pair of support guide members 294 which are affixed to the upper portions of the top pair of the channel members 261 by suitable means such as cap screws (not shown). The lower runs of the endless chains 288 ride in a slot 296 extending longitudinally of the conveyor which is formed by a pair of strap-like members 297 and 298. The member 297 is secured to the lower portion of the lower pair of channel members 261 by suitable means such as cap screws 299 (see FIGURE 25). The member 298 is supported on the member 297 to provide the slot 296 by C-shaped brackets 301 which are secured to the members 297 and 298 by cap screws 302 (see FIGURE 13).

Scale assemblies

A plurality of scale assemblies 306 are carried by the endless chains 288. Each of the scale assemblies consists of a mounting block 307 (see FIGURES 13 and 16) which is provided with a pair of bores 308 on opposite sides thereof which slidably receive a pair of guide rods 309 mounted in the endless chains 288. As will be noted particularly from FIGURE 22, the endless chains are completely filled with mounting blocks 307 disposed between the endless chains 288 and lie in relatively close proximity to each other. Each of these mounting blocks forms part of a separate scale assembly as hereinafter described.

As can be seen particularly from FIGURE 22, each of the endless chains 288 is comprised of spaced apart pairs of links 311 which are provided with four holes spaced along the length of the links. The two guide rods 309 for each of the mounting blocks 307 are mounted between the endless chains 288 in two of the holes in each link 311 in the pairs of links. One of the two guide rods serves as means for interconnecting the pairs of links. Spacers 310 are mounted on the guide rods 309 and serve to space the links 311. The guide rods extend transversely of the conveyor chains 288 and are fastened therein by snap rings 312.

Offset springs 313 are mounted on each of the guide rods 309 for yieldably urging the mounting blocks 307 in opposite directions. It will be noted that the offset springs 313 are mounted on opposite sides of every other mounting block so that the mounting blocks 307 will be offset in opposite directions for a purpose hereinafter described.

Each of the mounting blocks 307 is provided with a centrally disposed opening 316 (see FIGURE 16) in which is rotatably mounted a selector shaft 317 or a selector shaft 318. Two types of selector shafts are provided. One type of selector shaft is mounted in the blocks which are urged in one direction by the offset springs, and the other type of selector shaft is mounted in the blocks which are urged in the opposite direction by the offset springs. The first type of selector shaft will be designated as the selector shaft 317, whereas the second type will be designated as selector shaft 318.

Each of the selector shafts 317 and 318 is provided with four machined flat-sided notches 319, 320, 321 and 322 which are spaced longitudinally of the selector shaft from a shoulder 323 with 319 being the longest notch and 322 being the shortest notch. These notches are utilized in the selection operation in the candling station as hereinafter described. The notches 319–322 on selector shaft 317 extend to the right from shoulder 323 as viewed in FIGURE 17, whereas the same notches in selector shaft 318 extend to the left from shoulder 323 as viewed in FIG-

URE 18. In other words, the notches on one selector shaft are mirror images of the notches on the other selector shaft. The selector shafts 317 and 318 are rotatably secured in holes provided in the links 311 of the endless chains 288 by snap rings 324 mounted in grooves 325.

A lock bar 326 is provided in each of the mounting blocks 307 and is adapted to engage the notches 319–322 provided in the selector shaft carried by the mounting block. The lock bar 326 is yieldably urged upwardly into engagement with the selector shaft as shown particularly in FIGURE 16 by a pair of springs 327 seated within the mounting block and engaging opposite ends of the lock bar. The lock bar 326 is guided in its vertical movements by a pin 328 affixed in the latch bar and slidably mounted in the mounting block.

A selector knob 331 is mounted on one end of each of the selector shafts to facilitate rotation of the same. A circular member 332 is mounted on the other end of each of the selector shafts and each is provided with four radially extending pins 333, 334, 335 and 336 for rotating the selector shaft to predetermined positions as hereinafter described.

Another block 338 is mounted upon the mounting block 307 and carries a vertically disposed stub shaft upon which is mounted a cam wheel 341. The stub shaft is either a longer stub shaft 339 or a shorter stub shaft 340, so that every other cam wheel 341 is offset in the vertical direction as shown in FIGURES 13 and 16.

A scale beam mounting block 346 is detachably secured to the main mounting block 307 by suitable means such as a screw 347 (FIGURE 31). A scale beam 348 is pivotally mounted in the lower portion of the block 346 by a pair of pivots 349 threaded into the block 346 and seated in bearing members 351 provided in the scale beam 348. One end of the scale beam 348 is provided with a bifurcated end 352. A claw mounting block 353 is pivotally carried in the bifurcated end 352 by pivots 356 mounted in the bifurcated ends and engaging bearings 357 provided in the claw mounting block 353 (see FIGURE 31).

A depressor rod 361 is slidably and rotatably mounted in the claw mounting block 353. It is mounted in the block 353 in a suitable manner such as by bushing 362. The bushing 362 is an integral part of a gear member 364 which is rotatably carried in the mounting block 353. The gear member 364 is provided with a plurality of teeth 364*a* which are adapted to engage racks as hereinafter described. A member 366 of suitable material such as Teflon is provided between the gear member 364 and the mounting block 353 to ensure ease of rotation of the gear member. The gear member 364 can also be provided with a bearing (not shown) of suitable material such as brass to ensure ease of rotation on the depressor rod 361. The depressor rod 361 is provided with a disk 363 on its lower end for a purpose hereinafter described.

A claw assembly 367 is carried by the gear member 364. It consists of four claws 368 which are pivotally mounted on projecting portions 369 projecting outwardly in a radial direction from the gear member by suitable means such as pins 371. The claws 368, as can be seen from the drawings, are slightly tapered and are provided with rounded ends. They depend in a downward direction and curve inwardly. It also will be noted that the claws 368 are mounted so that they are not equally spaced about the periphery of the gear member 364 but rather they are mounted in spaced opposing pairs so that there is a substantially greater space between the pairs than there is between the claws which comprise each pair.

Each of the claws is provided with an extension 373 which extends inwardly at generally right angles to the general downward direction of the claws. As can be seen from FIGURE 31, this extension of each of the claws overlies the disk 363 carried by the depressor rod 361. Means is provided for yieldably urging the depressor rods and the disk in an upward direction and for locking the claw assembly 367 in a closed or locked position. This means consists of a block 376 slidably mounted on the depressor rod 361 and which is also pivotally connected to a latch lever 377 by pins 378. A spring 379 is mounted on the depressor rod and has one end which engages the latch block 376 and the other end which engages a snap ring 381 provided at the top end of the depressor rod. The latch lever 377 is pivotally mounted within the scale beam mounting block 346 by pivots 382 threaded into the mounting block 346 and engaging opposite sides of the latch member 377 as shown in FIGURE 31.

A small weight 384 in the form of an annulus is mounted on the outer end of the latch lever 377 by means of the screw 386 threaded into the latch lever 377 and held in place by a nut 388 threaded onto the screw.

A parallel bar 391 (see FIGURES 31 and 32) is provided as a part of each of the scale beam assemblies to ensure that the eggs will be dropped in a proper manner as hereinafter described. The parallel bar 391 has one end pivotally mounted in a vertical mounting member 392 secured to the claw mounting block 353 by a suitable means such as screw 393. The parallel bar is pivotally mounted in the upper end of a slot provided in the mounting member 392 by a pin 394. The other end of the parallel bar 391 is connected to one of the pivots 382 utilized for pivotally mounting the latch lever 377 as shown in FIGURE 31. This parallel bar acts in a manner well known to those skilled in the art to provide a parallelogram arrangement so that the claws will be moved in a generally vertical direction as the scale beam pivots upwardly and downwardly.

Means is provided for locking or latching the claws 368 in an engaged position and consists of a latch arm 396 which is pivotally mounted on one side of the claw mounting block 353 by a pin 397. The latch arm is provided with an abutment 398 which is adapted to be engaged by a projection 399 provided on the latch block 376 as shown particularly in FIGURE 31 so that the latch block can be latched or locked in an uppermost position to thereby hold the depressor rod 361 in a raised position and to thereby lock the claw assembly 367 in a locked or engaged position.

Means is provided for yieldably urging the latch arm 396 into a position so that the abutment 398 can be engaged by the projection 399 on the latch block 376. Such means consists of a coil spring 401 having one end 402 engaging the latch arm 396 and the other end 403 engaging the claw mounting or gear block 353. A stop 404 is provided on the latch arm and is adapted to engage the claw block 353 to prevent the spring 401 from urging the latch arm beyond a predetermined position. The latch arm 396 is also provided with an upwardly extending extension 396*a* which is adapted to be engaged as hereinafter described.

Two different weights are provided on the scale beam, one of which may be called the pendulous range control weight and the other of which can be called the balance weight. The pendulous range control weight consists of a cylindrical block 411 (see FIGURES 13 and 26) threaded onto a screw 412 extending downwardly from the bottom of the beam 348 in a generally vertical direction. The position of the weight 411 can be shifted upwardly or downwardly as hereinafter described on the screw 348. The weight can then be locked in the desired position by the nut 413.

The balance weight consists of a cylindrical block 416 which is threaded on a threaded rod 417 threaded into the end of the scale beam 348 opposite the end on which the claw assembly 367 is mounted. The rod 417 is locked in position by a nut 418. The balance weight 416 can be locked in the desired position by the set screw 419 (FIGURE 13). A roller 421 of suitable material such

as brass is rotatably mounted on the rod **417** between an inner nut **422** threaded on the rod and seated within a cylindrical recess **423** (see FIGURE 26) provided in the block **416**. A washer **424** and a nut **426** are provided on the other side of the roller **421** and serve to hold the roller in place. A tip **427** is mounted between the washer **424** and the nut **426**. The tip **427** is bent in such a manner that its outer extremity **427***a* lies in a generally horizontal plane in general alignment with the scale beam **348**. The leading edge of this outer portion **427***a* is provided with a leading edge **427***b* which has a knife-like edge that is positioned within five-thousandths of an inch for weight grading as hereinafter described.

The roller **421** provided on each scale assembly **306** actually serves as a cam roller and travels in a cam track **430** mounted on the rear of the main framework **164**. The cam track **430** is formed by a pair of spaced runners or rails **431** and **432**. The upper rail **431** is formed by strap-like members and switch plates as hereinafter described. The upper rail **431** is supported by spacers **433** of various lengths (see FIGURE 11) affixed to the lower flange of the rear channel member **261** of the lower pair of channel members **261**. The lower rail **432** is secured to the upper rail **431** in a predetermined spaced relationship by C-clamps **436** of various sizes. The upper and lower rails **431** and **432** are positioned so as to provide a continuous cam track **430** for the rollers **421** of the scale assemblies as the scale assemblies are moved by the endless chains **288** to which they are attached. The cam track **430** shifts in elevation as the scale beam assemblies progress through the different weighing stations as shown in the drawings, particularly FIGURE 11. The lower rail **432** from the first weighing station to the peewee or next to the last weighing station is inclined downwardly at a uniform angle, whereas the upper rail **431** is level in the weighing stations and is inclined downwardly between the weighing stations up to the peewee stations to provide track portions **430***a* of quarter width for weighing purposes as hereinafter described.

Each of the scale beam assemblies is provided with a pair of spring contact members **438** which are utilized during the candling operation as hereinafter described.

Candling light assembly

The candling light assembly **450** consists of a pair of endless chains **451** which are carried by two pairs of sprocket wheels **452** affixed to shafts **453** and **454**. The shafts **453** and **454** are rotatably mounted upon the channel members **272** by pillow blocks **456**. The pillow blocks, however, are constructed in a particular manner to insulate the candling light assembly **450** from the main frame **164**. The pillow blocks **456** are insulated from the frame **164** by a block **457**, a bushing **458** and a block **459** formed of insulating material which serve to support the pillow block **456** above the frame **164** and insulate the bolts **460** for securing the pillow blocks to the channel members **272** of the frame **164** from the channel members **272** as shown particularly in FIGURE 28.

A spur gear **461** is affixed to the shaft **453** and is driven by a spur gear **462**. The spur gear **462** is affixed to a shaft **463** rotatably mounted on the frame members **272**. A sprocket wheel **464** is affixed to the shaft **463**. The sprocket wheel **464** is driven by an endless chain **466** which is driven by a sprocket wheel **467** mounted on the main drive shaft **181** of the transfer motion gear housing **166**. A plurality of cross rods **471** are mounted between the pair of endless chains **451**. The cross rods **471** actually form a part of the endless chains **451** in that they serve as a means for pivotally connecting the links **472** of the chain. The upper run of the chain **472** is supported by guides **473** which ride between the links. The guides **473** rest upon cross members **474** supported by insulating spacers **476** secured to the inturned flanges of the channel members **272** by suitable means such as bolts **477**.

A plurality of candling lights **481** are carried by endless chains **451**. Each candling light **481** consists of a ventilated lamp housing **482** which has a central opening **483**. The lamp housing **482** is secured to a T-shaped mounting member **484** which has three rollers **486**, **487** and **488** rotatably mounted on the lower side thereof. These rollers are arranged to provide a three point support. On one side, the rollers engage one of the cross rods **471** carried by the endless chains **451**, and on the other side, they engage the adjacent rod **471** carried by the endless chains. The rollers **486**, **487** and **488** are adapted to travel laterally of the rods so that the candling light can follow the scale assemblies during the candling operation as hereinafter described. A lamp **491** is mounted in a base **492** provided in the lamp housing **482**. The outer portion of the lamp socket or base **492** is electrically connected to the lamp housing **482** and to the T-shaped member **484**.

The circuitry is so arranged that the sprocket wheels **452**, the endless chains **451**, the shafts **453** and **454**, the rollers **486**, **487**, **488**, the T-shaped member **484**, and the lamp housing **482** are all above ground, that is, they have one side which may be called the "hot" side of a circuit for energizing each of the lamps **491**. For example, they can carry the positive side of a 24 volt D.-C. supply for the lamps connected by a conductor **490** to the D.-C. supply (see FIGURE 28). The center contact (not shown) in the base or lamp socket **492** is connected by a wire **496** to a wiper blade **497** of suitable material such as brass secured to the lamp housing **482** but insulated therefrom. These wiper blades **497** are adapted to engage the spring contact members **438** carried by the scale assemblies as shown in FIGURE 28 and serve to ground the center terminal of the lamp so that the lamp is energized during the time that the wiper blade **497** engages the spring contact members **438**.

The lamp **491** can be of a type well known to those skilled in the art as being suitable for candling purposes. For example, it can have a silver reflective coating provided on the lamp to direct substantially all of the light from the lamp out through the central opening **483** in the lamp housing **482**.

Other operative assemblies

Many safety devices are incorporated in our egg handling and grading machine to ensure that the machine will operate properly at all times.

As the scale assemblies begin to approach the lower run of the main conveyor, means **500** is provided on the upper run to ensure that each of the claw assemblies **367** is rotated so that one of the sides with the wider opening is facing the front of the machine. This means consists of a U-shaped member **501** (see FIGURE 15) mounted on the main frame **164** and which has mounted thereon a foam rubber pad **502** which extends longitudinally of the path of travel of the claw assemblies **367**. The U-shaped member **501** is supported upon a pair of vertical members **503** supported on one of the upper channel members **261**. The pad **502** is adapted to engage the claws **368** to cause the same to be rotated in a counter-clockwise direction as viewed in FIGURE 15 in the event they are not in a position in which one of the two wider openings or wider sides of the claw assemblies face the pad or the front of the machine. If the wide sides of the claw assemblies already face the pad **502**, they will not be rotated thereby and will simply pass the pad. However, if one of the narrow sides of the claw assemblies is facing the pad, it will be rotated until one of the flat sides faces the pad so that the claw assembly no longer engages the pad.

Before the scale assemblies **367** reach the egg pick-up station, they are unlatched by an unlatcher **506** affixed to one of the main frame members **261**. The unlatcher is adapted to engage the latch arms **396** of the scale beam assemblies to unlatch the latching lever **377** to thereby release the depressor rod **361** in the event it has not been released previously.

Thereafter, each of the claw assemblies **367** is rotated through 90° by a two-toothed sector **508** mounted upon a bracket **509** secured to one of the channels **121** of the feed-in conveyor. The claw assemblies **367** are rotated through these 90° so that one of the narrow sides is facing the incoming eggs in the feed-in conveyor. It has been found that this is the only position in which the eggs can be picked up by the claws **368** without the claws **368** striking each other, particularly if extra large or jumbo eggs are in adjacent pockets in the trays on the feed-in conveyor.

Immediately after the claw assemblies have been rotated through 90°, the depressor rods **361** are depressed by a spring member **511** secured to one of the C-clamps **301**. This ensures that the claw assemblies **367** will be in a released position so that they can pass over the eggs raised into the claw assemblies in the egg pick-up station.

After the claws **368** have passed over the eggs, the claws are already to be latched into position. This is accomplished by a U-shaped latcher **512** which is affixed to the opposite sides of the in-feed conveyor and moves with the in-feed conveyor. Thus, when the eggs are raised into the claw assemblies **367**, the latcher **512** at the same time engages the rollers **384** provided on the ends of the latch levers **377** to raise the latch levers **377** and the blocks **276** carried thereby so that the ears **399** are raised over the abutments **398** of the latch arms **396** to lock the claw assemblies in egg retaining positions.

An egg booster assembly **514** is mounted on the rectangular frame **167** driven by the transfer motion gear assembly and consists of a substantially T-shaped platform **516** affixed to the frame **167** on the forward side thereof so that it is adapted to engage the claw assemblies after they have been filled with eggs. The platform **516** carries a plurality of upstanding spring members **517** which are provided with upper circular portions **517***a* that are adapted to engage the bottom portions of the eggs in the claw assemblies **367** as shown in FIGURES 12 and 15 to gently push the eggs upwardly into the claw assemblies to ensure that the eggs are firmly gripped within the claw assemblies before they pass into the candling station.

The cam track is provided with a portion **430***b* (see FIGURE 6) which raises the forward ends of the scale assemblies as the scale assemblies pass over the right-hand side of the egg feed-in conveyor **102** as shown in FIGURE 8. This prevents the conveyor **102** from striking the scale beam assemblies during its movement.

After the eggs have been picked up and after they have been nestled firmly within the claw assemblies **367** by the egg booster assembly **514**, each of the scale assemblies continues to travel toward the candling station. Before reaching the candling station, each assembly engages a horizontal pin **521** (see FIGURE 17) mounted on one of the vertical spacers **434**. Prior to engagement with the pin **521**, the knobs **331** are all in a horizontal position and actually point in a direction opposite the direction of travel of the scale assemblies. As the scale assemblies are advanced, the pin **336** carried by the circular member **332** on each scale assembly strikes the pin **521** to cause rotation of the associated selector shaft of the scale beam assemblies in a clockwise direction as viewed from the front of the machine so that the knobs are all pointing upwardly or in a vertical direction thereafter. When the selector shafts are rotated to this position, the blocks **307** are free to travel to their extreme offset positions, or what in other words may be described as the good egg positions.

As soon as the selector shafts have been rotated, the cam wheels **341** carried by the blocks **307** of the scale assemblies engage two cam tracks **523** and **524** mounted upon the guide members **297**. The cam tracks **523** and **524** are at two different elevations as shown in FIGURE 16 so that one cam track is engaged by the upper level of cam wheels and the other cam track **524** is engaged by the lower level of cam wheels **341**.

As the cam wheels **341** engage the two tracks **523** and **524**, the mounting blocks **307** and the scale beam assemblies supported thereon are urged in opposite directions against the force of the offset springs **313** as shown by the arrows in FIGURE 30. Every other block **307** is urged in one direction and the intervening blocks are urged in the opposite direction.

Alternate scale assemblies are urged in opposite directions because there is insufficient room in which to rotate the eggs during the candling operation with the close spacing provided between the scale assemblies. It is desired to normally provide such close spacing between the individual scale assemblies in order to keep the length of the machine down to a minimum length.

The means provided for rotating the claw assemblies containing the eggs consists of two racks **526** and **527** disposed within the candling station. The rack **526** is supported by a pair of posts **528** and the rack **527** is supported by U-shaped member **529**. The posts **528** are mounted on the horizontal members **474**, whereas the U-shaped member **529** is supported by horizontal members **531** connected to the channel members **272**.

The two racks **526** and **527** lie in the same horizontal plane and are adapted to be engaged by the teeth **364***a* of the gear members **364** which form a part of the scale assemblies **367**. Thus, as the scale assemblies **364** are advanced by the conveyor chains **288**, the gear members will engage the racks so that the eggs in the claw assemblies engaging the rack **526** will be rotated in one direction and the eggs in the other claw assemblies engaging the rack **527** will be rotated in the opposite direction.

At the time the scale assemblies enter the candling station, they will pick up one of the travelling candling lights **481**. Just before the candling lights **481** come into engagement with the scale beam assemblies, they are brought into a single line by a pair of guide members **536** mounted on a horizontal member **537** secured to the channel members **272**. The guide members **536** serve to engage the wiper blades **497** of the light assemblies and serve to urge them from the right or the left toward the center position so that the candling lights **481** are in a mid-point position where they are adapted to engage the contact members **438** on the scale beam assemblies.

The candling lights **481** and the scale beam assemblies **367** move in a timed relationship so that during the time the scale beam assemblies are within the candling station **104**, they carry with them a candling light **481** which can be called a travelling candling light. This makes it possible for the operator in the candling station to view the eggs under a candling light as the eggs pass through the candling station.

A trough **539** (FIGURE 27) is mounted in the candling station and generally underlies the path of travel of the eggs through the candling station and serves to receive any eggs which may accidentally fall out of the claw assemblies during rotation of the claw assemblies with the eggs therein. A protective cover **540** underlies the trough **539** and covers certain of the moving parts of the candling light assembly **450**.

The candling station **104** is provided with a relatively large canopy **541** which overlies that portion of the main conveyor utilized for the candling operation. The front of the canopy is provided with a cloth **542** of suitable color such as black which is adapted to be draped over and behind the operator in the candling station to facilitate the operator in viewing the eggs as they pass through the candling station.

The operator during the candling operation views the eggs and turns the knobs on the selector shafts to the desired positions. For all the good eggs, the knobs are left untouched. For blood eggs, the knobs are turned to face to the left. For commercial eggs, the knobs are turned so they face down; and for checked eggs, the knobs are turned so they face to the right.

Upon leaving the candling station, the scale or transport assemblies **367** shift to their preselected positions as

determined by the candling operator as shown in FIGURES 33 and 34 and as described hereinafter in detail. The scale beam assemblies or transports can assume any of the following positions depending upon the position of the selector rod of the scale beam assembly.

(1) Full rear—good egg
(2) One half to the rear—commercial egg
(3) Central—blood egg
(4) One half forward—checked egg
(5) Full forward—good egg

The blood eggs are discharged immediately after shifting of the scale assemblies. This discharge of the blood eggs is accomplished by engagement of the latch arms **396** of all of the scale assemblies in the mid-point or central position with an unlatching bar **551** (see FIGURE 35) mounted on one of the channel members **261**. As the latch arm **396** engages the unlatching member **351**, the depressor rod **361** is released to permit a disk **363** carried by the depressor rod to be lowered and to permit the claws **368** to swing outwardly due to the weight of the egg and to permit the eggs to drop out of the claw assembly **367** and into a blood drop chute **552** mounted on the channel member **272**. The eggs as they drop into the blood chute **552** are broken and drop into a container **553**.

The unlatching lever **551** is provided with an insulated portion **551***a* so that at the time the unlatching member **551** engages one of the latch arms **396**, the portion **551***a* is grounded to energize a counter **556** mounted on the main framework of the machine just ahead of the candling station. This counter is a standard piece of equipment and can be of the type manufactured by Food Machinery & Chemical Corp.

Means is provided for dropping the eggs at the check drop station **107** and the commerial drop station **108**. The means provided at both stations is identical, and for that reason only one will be described in detail. A portion of the means utilized in the commercial station is shown in FIGURE 37. The portion shown consists of a solenoid assembly **560**. As hereinafter described, such solenoid assemblies normally consist of five solenoids **561** when used in the weighing stations. In the commercial and check stations, only four solenoids and a post **559** are utilized for reasons hereinafter described. The solenoids **561** are spaced longitudinally of the main conveyor and are mounted upon a plate **562** which is provided with openings **563** (see FIGURE 52) through which the plungers **564** of the solenoids extend downwardly. The solenoids can be identified as **501–505**, respectively, as shown in the circuit diagrams in FIGURES 68 and 69. The plate **562** is affixed to a vertical plate **566** which is secured to a horizontal plate **567**. The plate **567** is secured to the lower flange of one of the lower channel members **261** by suitable means such as cap screws **568**. A reinforcing plate **569** is provided for securing the plate **566** to the plate **567**. The solenoids **561** are also secured to the plate **566** by screws **571**.

Unlatching levers **573** are provided for the solenoids **561** and are pivotally mounted in slots **574** in the plate **566** by pins **576**. The front ends of the unlatching levers **573** are pivotally connected to interconnecting links **577** by pins **578** and the other ends of the interconnecting links **577** are pivotally connected to the plungers **564** of the solenoids by pins **579**. The rear ends of the unlatching levers are formed with depending portions as shown, which are adapted to engage the latch arms **396** of the scale or transport assemblies. Means is provided for yieldably urging the rear ends of the unlatching levers **573** upwardly and consists of springs **581** having one end secured to the lever **573** as shown and having the other end secured to the plate **567**. The set of four relays or five relays in the weighing stations is enclosed within a cover **582** mounted on the plates **562** and **567**.

The unlatching lever **573** for the last solenoid or the solenoid **505** on the left-hand side, as viewed in FIGURES 37 and 55, is provided with a contact member **573***a* which is insulated from the lever **573** and connected to a conductor **583** that is connected to circuitry as hereinafter described. In the commercial and check stations, a post **559** is mounted on the plate **562** and takes the place of the first solenoid **501** as shown in FIGURE 37.

The means for dropping the eggs at the various stations also includes switch means in the form of a switch plate assembly **585** for operating the solenoid assembly **560**. The switch plate assembly consists of five pairs of switches which may be identified as switches S1, S2, S3, S4 and S5 with the front contacts looking into the machine from the rear of the machine being identified as contacts S1–1 and the rear contacts being identified as S1–2, and so forth, as shown in FIGURES 46, 68 and 69. These switches are mounted on a plate **586**. The plate **586** forms a part of the upper rail **431** of the cam track **430** for the rollers **421**, as shown in FIGURE 44. The plate **586** is held in the proper horizontal position by vertical angles **587** secured to the outwardly turned flanges of a lower channel member **261** and by right angle brackets **588** secured to the plate **586** and to the vertical members **587**.

The contacts of the switches S1–S5 are adapted to be operated by horizontally extending pins **591** of a suitable insulating material. The pins are carried by plungers **592** of suitable material such as brass which are slidably mounted in cylindrical housings **593** mounted upon the plate **586**. The housings are provided with slots **594** on opposite sides thereof which accommodate the pins **591** and permit limited vertical movement of the plungers and pins. When the pins are resting against the plate **586**, a portion of the plunger **592** extends below the lower surface of the plate **586**, as shown particularly in FIGURES 36, 47 and 50. In the commercial and check stations, these portions are relatively narrow rectangular portions **592***a* as shown in FIGURE 36, whereas in the weighing stations these portions are rounded cylindrical portions **592***b* as shown in FIGURES 47 and 50. These portions **592***a* and **592***b*, as hereinafter described, are adapted to be engaged by the rollers **421** of the scale or transport assemblies which raise the plungers and the pins carried thereby to operate the switches S1–S5 for operating the solenoids SO–1—SO–5 as hereinafter described.

When the scale beam assemblies are passing through the commercial and check stations, the position of the rollers **421** and the scale assemblies is rather closely controlled by the cam track **430**, that is, the rails **431** and **432** are positioned relatively close together so that there is no substantial vertical movement of the scale assemblies. As soon as the scale assemblies enter either the commercial or the check station, the rollers **421** come into contact with one of the plates **586** carrying the switches S1–S5 and the plungers **592**. The narrow portions **592***a* are all in longitudinal alignment within each station and are positioned so that they will be engaged by the rollers **421** only if the scale assembly has been shifted to the position which corresponds to the position required for actuation in the station. For example, in the commercial drop station, only the scale assemblies **306** which are in the commercial egg position will have their rollers **421** engage the portions **592***a* of the plungers **592** as shown in FIGURE 38. Upward movements of plunger **592** cause operation of the associated switch and solenoid, as hereinafter described, to cause the associated unlatching lever **573** to be lowered to engage the latch arm **396** of the scale assembly to drop the egg in the scale or transport assembly into a pocket in the egg tray immediately below. The rollers **421** of the scale or transport assemblies in any other lateral position will not affect the plungers and switches in the commercial and check stations, as shown in FIGURE 38.

The same thing will occur in the check station so that by the time the eggs have been passed through the com-

mercial and check stations, all of the eggs of check and commercial grade have been dropped or discharged. Thereafter, the cam track **430** is inclined upwardly to facilitate weighing of the jumbo eggs first, as hereinafter described.

Upon moving out of the commercial station, the selector shafts **417** and **418** of the scale or transport assemblies are brought back to their mid-point positions by cams **601** and **602** mounted on members **297** as shown particularly in FIGURES 1 and 41. The selector shafts must be rotated because when the selector shafts are in certain positions, the mounting blocks **307** cannot be brought back to the central position. Thus, all of the selector shafts which are not in the blood position, that is, with the knobs facing to the left as viewed from the front of the machine or facing in a direction opposite the direction of travel of the lower run of the conveyor chains **288**, are rotated by four latch members **604**, **605**, **606** and **607** mounted in a block **608** secured to the underside of the flange of one of the channels **261**. The hook-like latch members **604–607** are mounted in inclined slots **609** provided in the mounting member **608** and are fastened therein by screws **611**. The hook-like latch members **604–607** overlie the path of travel of the circular members **332** of the scale assemblies and are adapted to engage the pins **333–335** extending radially from the members **332**. It will be noted from FIGURE 42 that the hook-like members will not engage any of the pins when the selector shafts are in the blood position because of the arrangement of the pins as is evident from FIGURE 42. Looking at FIGURE 42, the third circular member **332** from the left will be rotated through 90° by the latch member **606** engaging the pin **334**. The third circular member **332** from the left as viewed in FIGURE 42 will be rotated through 180° to bring it to the blood position. First, it will be rotated 90° by the latch member **605** engaging the pin **333**, and then another 90° by the latch member **606** engaging the pin **334**. The fifth circular member **332** from the left will be rotated through 270° by the latch members. It is first rotated through 90° by the latch member **604** engaging the pin **335**. Then, it will be rotated 90° by the latch member **605** engaging the pin **333** and through another 90° by the latch member **606** engaging the pin **334**.

After all of the selector knobs **331** have been moved to the central or blood position, the scale or transport assemblies **367** can be readily moved to the central position by the cams **601** and **602**.

Weighing stations

After the scale assemblies **306** have been returned to their central positions by the cams **601** and **602**, the scale assemblies pass into the weighing stations. As they pass into the weighing stations, the cam track **430** for the rollers **421** is inclined upwardly, as hereinbefore described, so that the scale assemblies will be in a position to weigh the largest eggs first.

A slicer bar **616** is mounted in each of the weighing stations in general alignment with each switch plate assembly **585**. The slicer bar is mounted upon a pair of posts **617** attached to the lower rail **432**. The forward or leading edge **616***a* of the slicer bar is positioned in an exact location as hereinafter described and is more like a knife edge which is adapted to serve as a divider or slicer for the tips **427***a* carried by the scale assemblies. As hereinafter described, when the egg in the scale assembly is sufficiently heavy, the tip **427***a* will pass above the slicer bar, whereas if the egg is too light, the tip **427***a* will pass below the slicer bar.

The slicer bar is provided with a plurality of downwardly inclined slots **619** spaced longitudinally of the slicer bar **616**. One slot is provided for each of the plungers **592** in the switch plate assembly **585**. The slots are disposed in the bar **616** so that the slot corresponding to the switch operated lies slightly beyond the plunger **592** utilized for actuating the switch. Thus, when the switch is operated and the solenoid is energized to release the egg from the claw assembly and the rear end of the scale beam assembly drops downwardly, the tip **427***a* will pass downwardly through the slot **619** so that the roller **421** of the scale assembly cannot thereafter actuate any of the succeeding switches on the plate **586**.

As shown particularly in FIGURES 11 and 44, immediately before each of the slicer bars, the cam track **430** widens slightly to provide a portion **430***a* of the cam track which is substantially wider than the diameter of the rollers **421** so as to permit the balance beam of the scale assembly to swing slightly back and forth within the cam track to find a balance position. Thereafter, the scale assembly passes into the slicer bar **616** which determines whether the egg in the scale beam assembly is within the weight classification of the weighing station being entered.

It will be noted that the switch plate assemblies **585** and the associated splitter bar **616** in the weighing stations are positioned on progressively lower levels as can be seen from FIGURE 11. This is necessary because the eggs which are continued to be carried by the scale assemblies are progressively lighter eggs as the heavier eggs are dumped or discharged in the preceding weighing stations.

Main conveyors and stub conveyors

As explained previously, main conveyor assemblies **117** are provided for each of the four major egg weighing stations **110–113** which normally receive the major quantity of the eggs which are graded by the egg grader. As also explained previously, these four stations are for the extra large, large, medium and small eggs. Stub conveyors **116** are provided for the check, commercial, jumbo, and peewee stations. Both types of conveyors are used as empty container feed-in conveyors and as filled container removal conveyors.

Each of the main conveyor assemblies **117** is comprised of three sections **631**, **632** and **633** with each section being the form of a U-shaped trough. The sections **631** and **633** are parallel with respect to each other and extend at right angles to the section **632** which is mounted between the claw assemblies **367** in the weighing station and supported upon the channel members **272**.

The outer ends of the sections **631** and **633** are supported by a pedestal-like mount **634** which has mounted thereon a pair of side plates **636** affixed to opposite sides of the associated section **631** or **633** by cap screws **637**. A collar **639** is mounted on the pedestal **634** and has mounted thereon a base **641**. A gear motor **642** is mounted on the base and is provided with an output shaft **643** which drives a sprocket wheel **644**. The sprocket **644** drives a chain **646** which drives a sprocket wheel **647**. The sprocket wheel **647** is affixed to a shaft **648** rotatably mounted in brackets **649** secured to the sides of the conveyor section. A roller **651** of suitable material such as wood is affixed to the shaft **648** and is driven by the shaft.

An endless belt **652** of suitable material, such as plastic, is driven by the roller **651** and has its upper run passing over the top of the conveyor section **631** as shown in FIGURE 53. The belt **652** travels over another roller **653** rotatably mounted at the other end of the section **631**. Means is provided for tightening the belt **652** and consists of a roller **654** rotatably mounted between the support plates **636** and over which the lower run of the belt **652** passes. It also includes another roller **656** which overlies the lower run of the belt **652** and which is carried by a pair of pivotally mounted members **657**. The members **657** and the roller **656** are adapted to be held in a belt tightening arrangement with respect to the belt **652** by a threaded rod **658** affixed to one of

the members **657** and extending through a slot **659** in plate **636**. A nut **661** is threaded on the threaded rod **658** and is adapted to clamp the member **657** and the roller **656** carried in a predetermined position with respect to the plate **636** to obtain the desired tension on the belt.

The in-feed section **631** of the main conveyor **117** is normally supplied with cartons or containers of a desired type by a suitable machine such as a conventional carton folding machine (not shown).

As hereinafter explained, the main conveyor **117** has been arranged so that it can accommodate three different types of egg containers. These three different types of egg containers are well known to those skilled in the art and are shown in FIGURES 62, 63 and 64. They consist of the molded tray **664** which is provided with receptacles for 30 eggs with 6 eggs in a row in one direction and 5 eggs in a row in the other direction. The other containers are two types of cartons which are also normally utilized in the egg industry. They consist of the molded carton **666** which is commonly called the "Case Ace" and the folded carton **667** which is commonly called the "Tri-Strut."

The conveyor belt **652** is adapted to supply any one of these three different types of egg containers to the intermediate sections **632** of the conveyor.

Means is provided for advancing the egg containers in the second section **632** of the conveyor assembly **117** as they are delivered by the first section **631**. It consists of an endless conveyor chain **671** which is provided with upstanding pusher members **672**. The chain **671** rides in a longitudinal groove **674** provided in the bottom wall of the conveyor section **632** adjacent the left-hand side thereof as viewed in FIGURE 59. The chain **671** is driven by a sprocket wheel **676** which is affixed to a shaft **677**. The shaft **677** is rotatably mounted in bearing assemblies **678** supported by members **679** affixed to the side walls of the conveyor section **632**. The conveyor section **632** is supported upon the channel members **272** by support posts **680**. The other end of the chain **671** passes over a sprocket wheel **681** fixed to a shaft **682** rotatably mounted on the section **632** (FIGURES 57 and 59).

Another sprocket wheel **683** is affixed to the shaft **677** and is utilized for driving the same. The sprocket **683** is driven by an endless chain **684**. The chain **684** is driven by a sprocket **686**. The sprocket **686** is mounted on a hollow tube **687** which is rotatably mounted on a main machine shaft **688**. The main machine shaft **688** extends longitudinally of the main frame and is rotatably mounted in pillow blocks **689** secured to depending members **691** mounted on the channel member **272**. A sprocket **693** is mounted on the end of the shaft **688** and is driven by an endless chain **694**. The chain **694** is driven by a sprocket **696**. The sprocket **696** is affixed to a shaft **697** which is coupled to the output shaft **237** from the transfer motion gear mechanism by a coupling **698**.

The tubular member **687** is secured to one part **701** of a magnetic clutch **702** which is affixed to the channel member **272** by a bracket **703**. The operation of the magnetic clutch **702** is such that when the clutch coil **804** is energized, the sprocket wheel **686** is rotated with the continuously rotating shaft **688** and stops rotating when the magnetic clutch **702** is de-energized. The magnetic clutch **702** is adapted to be energized at predetermined intervals as determined by cam member **706** mounted on the shaft **67**. The cam member **706** is provided with three separate cam wheel portions **706***a*, **706***b* and **706***c*.

The cam wheel portions **706***a*, **706***b* and **706***c* are adapted to be engaged by three separate microswitches MS–3, MS–4 and MS–5, respectively, which are supported by a post **707** secured to the bottom of the conveyor section **632**. The microswitches MS–3, MS–4 and MS–5 are provided for shutting off the conveyor drive

for the egg containers so that they are stopped in a predetermined position below the scale assemblies to permit the eggs from the scale assemblies to be dropped into the proper pockets in the cartons or trays.

Means is provided in the second conveyor section **632** for ensuring the proper advance of the cartons or trays as they are delivered to section **632** by the continuously advancing belt **652**. This means includes a pair of guide bars **712** and **713** which are mounted on opposite sides of the second conveyor section **632**. They are adapted to overlie the trays to hold down the trays on the second conveyor section **632** so that they will be advanced by the pusher members **672**. These guide members **712** and **713** also permit use of trays which have been slightly bent or are deformed.

A microswitch MS–6 has been mounted on the side of the conveyor section **632** and is provided with an operating arm **716** which is adapted to be operated by a tray as a tray passes beneath the same to select the proper microswitch of the microswitches MS–3, MS–4 and MS–5 operated by the cam member **706**.

A pair of angle guide members **717** and **718** are mounted on the bottom wall of the conveyor section **632** and serve as guides for cartons of the molded and folded type. The guide member **717**, as shown in FIGURE 58, extends in front of the belt **652** so that when cartons are supplied by the belt **652**, the cartons will be stopped by the guide. The cartons when stopped in this manner will overlie the chain **671** so that the pusher members **672** can engage the cartons and advance the cartons. These same guide members **717** and **718** are used for guiding the molded or folded cartons. It will be noted that guide member **718** does not extend into the first conveyor section **631** so it does not interfere with the delivery of trays. The guide member **717** is so positioned that the edge of the tray can touch the side wall of the second conveyor section before the pocket portion of the tray touches the guide member **717**.

A rod **721** overlies the conveyor section **632** and is provided for bending the lids of the folded cartons downwardly so that they can pass underneath the claw assemblies **367** during the filling operation. This rod **721** has one end secured to one side of the conveyor section **631** and has the other end affixed to one side of the conveyor section **632**. The rod, as shown particularly in FIGURES 56 and 59, inclines downwardly and diagonally of the second conveyor section **632** so that as the carton is advanced up the conveyor section **632**, its lid is bent down to the same level as the main body of the carton **667**. An additional guide member **722** mounted on conveyor section **632** is provided for holding the main body of the carton down during the time the lid is urged downwardly by the rod **721** to prevent the carton from being tipped out from between the guide members **717** and **718**.

A microswitch MS–7 is mounted on the rod **721** and is provided with an operating arm **724** which is adapted to engage the lid of the folded cartons. This microswitch MS–6 is utilized for selecting the proper microswitch MS–4 or MS–5 so that the cartons will be advanced in the proper manner. The spacing between the pockets in the molded carton is slightly different from that of the folded carton and, therefore, such sensing means must be provided. The microswitch MS–6 is particularly important in that it is utilized for operating a relay, hereinafter described, which determines whether five eggs will be dropped in a row or whether two eggs will be dropped in a row. The trays are loaded five eggs in a row, whereas the cartons are loaded two eggs in a row.

After the cartons or trays have been filled with eggs, they are advanced onto a continuously moving belt **731** mounted in the forward portion of the conveyor section **632**. The belt **731** is carried by rollers **732** and **733** rotatably mounted on the conveyor section **732**. The roller

732 is driven by a sprocket wheel 734 driven by an endless chain 736. The chain 736 is driven by a sprocket 737 affixed to the shaft 688 (see FIGURES 60 and 61).

The belt 731 delivers the cartons or trays to the third conveyor section 633 which is also provided with a continuously moving belt 741 mounted upon rollers 742 and 743. The roller 743 is driven by a drive mechanism (not shown), as hereinafter described, which is identical to the drive mechanism utilized for driving the roller 651 on the first conveyor section 631. The outer or discharge end of the third conveyor section 633 is also supported by a pedestal-type mount of the same type utilized for supporting the incoming section 631 of the conveyor.

The main conveyor 117 which is shown for the extra large weighing station is substantially identical to the other conveyor assemblies 117 utilized in the small, medium and large weighing stations.

The stub conveyors 116 which are utilized in the check and commercial stations and in the jumbo and peewee stations are substantially similar to the middle or second section 632 of the main conveyor assemblies 117. The stub conveyor 116 for the jumbo weighing station is shown in FIGURE 56. The other stub conveyors are substantially identical. As can be seen from FIGURE 56, the stub conveyor 116 differs from the second section 632 of the main conveyor 117 in that the lid holding down rod 721 and the hold-down bar 722 is omitted. Also, these conveyors are not provided with the guide members 717 and 718 because it is only intended that these stub conveyors carry the standard trays 664. However, it is readily apparent that, if desired, the stub conveyor 116 can be readily adapted for the use of cartons by some very simple additions.

The stub conveyors 116 are driven in the same manner that the middle or second sections 632 of the conveyor assemblies 117 are driven. However, in view of the fact that only one type of container will be used with these stub conveyors, it is only necessary that one cam wheel and one microswitch be provided.

However, it should be pointed out that the cam member 706 for the jumbo station is provided with cam surfaces so that only four jumbo eggs are dropped in a row rather than five eggs before the tray is advanced to another row. This is necessary because a special four-to-a-row tray is required for jumbo eggs as shown in FIGURE 74.

Other operating parts

A unique problem is posed by the peewee station because it is impossible for the scale assemblies 306 to determine whether there is a peewee egg in the claw assembly 367 or no egg in the claw assembly. Thus, in effect, the scale assemblies are unable to weigh any egg which is smaller than the small egg. It is not particularly desirable to weigh the peewee eggs since the peewees are normally sold for commercial use and are purchased by their total weight rather than the number of eggs. Means must, however, be provided for determining whether an egg is present in the claw assemblies 367 as they pass through the peewee station so that the trays in the stub conveyor 116 for the peewee station will not be advanced with empty pockets in them.

Such means consists of photoelectric means 760 in the form of a lamp 761 which is mounted in a housing 762 carried by a support member 763 provided on the channel member 272. The housing 762 is provided with a long narrow slot 764 so that a relatively wide beam of light will be allowed to pass from the lamp 761. The photoelectric means includes a photoelectric relay 765 of a conventional type which is mounted upon a support member 766. The support member 766 is supported by another member 767 attached to the guide members 712 and 713. The lamp 761 and photoelectric relay 765 are mounted between the small and peewee stations in a line through which each of the claw assemblies 367 must pass. The photoelectric relay determines whether or not an egg is present in the claw assembly. Since the light beam from the lamp 761 is relatively wide with respect to the width of one of the claws 368 of the claw assembly, it is possible for the photoelectric cell to readily distinguish between an empty claw assembly and a full claw assembly. The photoelectric relay 765 is connected to circuitry shown in FIGURE 70 mounted in a control box 766 mounted on the stand 252. An unlatching member 771 is mounted on the main frame 161 and is provided for the purpose of unlatching any scale assemblies which for any reason may have remained unlatched.

A large control box 781 is mounted in the stand 252. This control box 781 contains the circuitry for the six weighing stations and the commercial and check stations. Additional circuitry for the commercial and check stations is contained in a box 782 mounted on the main frame 164. A large transformer T–1 for transforming the input voltage of 115 volts A.-C. to 24 volts A.-C is utilized in the control circuitry and is mounted within the control box 781. One row 783 of six relays each identified as RY1–RY6 is provided for each of the six weighing stations and the two commercial and check stations.

A cam shaft 786 is rotatably mounted in the control box 781 and is driven by the main machine shaft 688 utilized for driving the conveyors. It is driven by an endless chain 787 which is driven by a sprocket 788 on the shaft 688. The chain 787 drives a sprocket 789 affixed to the shaft 786. The chain drive provides a 3 to 2 reduction in speed for the cam shaft 786. A plurality of cancelling cams 791 are mounted on the shaft 786. One of the cams 791 is provided for each of the six weighing stations and the two commercial check stations. A switch S6 is adapted to be operated by each of the cams. A pair of additional cams 796 and 797 are mounted on the cam shaft 786 for the peewee station and can be termed the pulse cam and the solenoid duration cam. These cams operate switches S16 and S17, respectively.

Operation of the egg handling and grading machine

The operation of our egg handling and grading machine may now be described in conjunction with the circuit diagram shown in FIGURES 67, 68, 69 and 70.

(1) *Operation of feed-in conveyor.*—The operation of the egg feed-in conveyor can be best described in conjunction with the circuitry shown in FIGURE 67. The egg feed-in conveyor 102 hereinbefore described has been designed so that it is particularly adapted for receiving the eggs as they come in from the egg producer. As is well known to those skilled in the art, the eggs are customarily received in 30 dozen cases or crates in which the eggs are mounted on separate trays containing 2 and one-half dozen or 30 eggs each. The trays are like the trays 664 shown in FIGURES 64A and 64B and have five rows of six eggs each. In other words, the trays have pockets for six eggs in one direction and spaces for five eggs in the other direction. The feed-in conveyor 102 has been particularly designed so that it can receive such egg-filled trays 664.

In loading the conveyor 102, the operator for the egg handling and weighing machine places the separate trays 664 containing 30 eggs each upon the top conveyor surface 129 of the conveyor 102 between the pushing or advancing rods 128 so that the eggs are advanced six abreast. As explained previously, the conveyor 102 is formed so that the trays will readily fit between the advancing rods 128 in an abutting relationship to provide a continuous procession of rows of eggs advancing on the conveyor 102.

The operator in loading the conveyor with traps normally fills the conveyor completely within a short period of time. The length of the conveyor 102 is normally chosen so that a relatively large number of trays can be

placed on the conveyor so that the quantity of eggs on the conveyor will be sufficient to keep the machine operating for a substantial period of time as, for example, 20 minutes. This makes it possible for a single operator to keep the conveyors **102** of several machines filled or to permit the same operator to perform other functions such as the packing of eggs discharged from the stub conveyors **116** and the main conveyors **117**.

The eggs in the trays or flats **664** on the conveyors are advanced row by row into the egg pick-up station **103**. Operation of the conveyor **102** is initiated by the closing of the microswitch MS–2 as the operating arm **239** is engaged by the frame **167** carried upon the transfer motion gear housing **166**. As shown in FIGURE 67, closing of microswitch MS–2 establishes a circuit for energizing the coil of relay RY–7 from the 115 volts A.-C. through one pole of the main control switch S–11. Switch S–11, as explained previously, is closed when the combination drive unit **276** is operating for driving the main part of the machine. This prevents operation of the conveyor **102** unless the main part of the machine is operating.

Energization of relay RY–1 closes both of its sets of normally open contacts **1** and **2**. The second set of contacts energizes the coil **155** for the electric clutch **154** through the rectifier **242**. Energization of the clutch **154** connects the shaft **151***a* to the shaft **151***b* to commence movement of the upper run of the conveyor toward the egg pick-up station. The motor for driving the feed-in conveyor **102** is continuously running and is energized by the switch S–12.

The microswitch MS–2 is only momentarily closed by the frame **167** because, as hereinafter explained, the frame **167** is continuously moving in its triangular path. The first set of contacts of relay RY–1 establishes a holding circuit for relay RY–1 through the microswitch MS–1 which is normally closed.

As pointed out previously, microswitch MS–1 is operated by the cam wheel **161** mounted on the shaft **151***a*. The cam wheel **161** is provided with five raised portions **162** which correspond to the spacing between the five rows of eggs in each tray. The five raised portions **162** are arranged on the cam wheel **161** so that the spacing between the first raised portion and the last raised portion is equivalent to the spacing between the last row of a tray and the first row of a succeeding tray. As is well known to those skilled in the art, this spacing is substantially greater than the spacing which is provided between individual rows in a single tray.

Movement of the conveyor **102** continues until the microswitch MS–1 is opened by one of the raised portions **162** provided on the cam wheel **161**. As soon as the microswitch MS–1 is opened, relay RY–1 is deenergized to deenergize the clutch coil **155** which releases shaft **155***b* to stop movement of the conveyor. The conveyor **102** is not advanced again until the microswitch MS–2 is again closed by the frame **167**. Thus it can be seen by the circuitry provided in FIGURE 67 that the eggs in the feed-in conveyor **102** are advanced one row at a time, six eggs abreast, into the egg pick-up station. It can also be seen from the foregoing description that means is provided for accommodating the greater spacing between the last row of a tray and the first row of the succeeding tray.

(2) *Operation in egg pick-up station.*—The feed-in conveyor **102** operates in synchronism with the main transport or conveyor assembly **101**. The transport or conveyor assembly **101** is moved continuously by the drive unit **276**. The transfer motion gear assembly **166** is also operated continuously by the drive unit **276**. Thus, the scale or transport assemblies **306** of the main transport assembly **101** are moving continuously while the machine is operating. Since this is the case, the eggs during the time they are being picked up by the scale assemblies must move with the scale assemblies. It is for this reason that the transfer motion gear assembly **166** has been provided.

As hereinbefore explained, the scale assemblies **306** before they arrive at the egg pick-up station are first released, then rotated through 90°, and then the depressor rod **361** is depressed to ensure that the claw assemblies **367** of the scale assemblies are in a condition in which they will be able to have eggs inserted in them at the egg pick-up station.

Now let it be assumed that the transport conveyor assembly **101** has progressed sufficiently so that there are six empty claw assemblies **367** overlying the next row of eggs in the feed-in conveyor **102**. During the time that the six scale assemblies **306** are moving into this position, the portion of the egg feed-in conveyor **102** within the pick-up station is being raised and shifted to the right as viewed in FIGURE 8 at a uniform rate in the path **231***a* as shown in FIGURE 8. As the feed-in conveyor **102** is being raised, the row of eggs in the conveyor underlying the empty claw assemblies **367** are pushed upwardly into the open claw assemblies. At the same time, the eggs are advanced to the right by the transfer motion gear mechanism **165** so that the eggs are travelling with the claw assemblies **367** into which the eggs are being inserted. During the raising of the eggs, the claws **368** of the claw assemblies are free and, therefore, may be urged outwardly to accommodate the various sizes of eggs.

At the same time that the eggs are being inserted into the claw assemblies, the latcher bar **512** carried by the egg feed-in conveyor **102** engages the small wheel weights **384** on the scale assemblies to urge the outer ends of the latch levers **377** of the scale assemblies upwardly as shown in FIGURE 25. Upward urging of the latch levers **377** is against the urging of the springs **379**. Thus, as the eggs are urged upwardly, the latch levers **377** are also urged upwardly so that when the eggs are raised to their uppermost position, they are completely inserted within the claw assemblies. At this time, the projections **399** on the latch blocks **376** engage the abutments **398** carried by the latch arms **396** to latch the claw assemblies **367** into egg retaining positions. After the latching occurs, the portion of the conveyor **102** in the egg pick-up station drops downwardly away from the claw assemblies **367** and, at the same time, the latcher bar **512** drops away from the wheel weights **384** on the latching levers **377**. Conveyor **102** continues to shift to the right as viewed in FIGURE 8 so that there is a uniform rate of travel in a downwardly inclined direction as shown by the portion **231***b* of the path of travel **231** for the conveyor **102**.

When the frame **167** has substantially reached its extreme right-hand position as viewed in FIGURE 8, the microswitch MS–2 is operated to cause advancement of the feed-in conveyor **102** as hereinbefore described to advance another row of eggs into the pick-up station. During the time this is occurring, the conveyor **102** is returned to the left as viewed in FIGURE 8 along a straight line path **231***c*. Also during this time, additional empty claw assemblies **367** will be moving into position over the feed-in conveyor so that as the feed-in conveyor again begins to rise, the next row of six eggs can be inserted into the empty claw assemblies and latched therein.

This operation hereinbefore described goes on continuously and is timed in a proper manner so that as the claw assemblies **367** of the scale assemblies **306** pass through the pick-up station, each of the claw assemblies **367** will be filled with an egg.

It will be noted from FIGURE 8 that the front ends of the scale assemblies are tipped upwardly as they pass through the pick-up station at a point which corresponds to the right-hand side of the feed-in conveyor **102** with the feed-in conveyor **102** in its uppermost position as shown in FIGURE 8. This movement is caused by a depression **430***b* in the cam track **430**, as shown in FIGURE 6, to

permit the scale assemblies to leave the egg pick-up station without striking the conveyor **102**. During the other positions of the scale assemblies **306** in the pick-up station, they are held relatively level.

As soon as the scale assemblies are moved out of positions overlying the feed-in conveyor **102**, they are engaged six at a time by the egg booster assembly **514** the next time the conveyor **102** is moved upwardly by the transfer motion gear assembly **165**. The spring members **517** of the booster assembly serve to gently nudge the eggs upwardly into the claw assemblies **367** to ensure that the eggs are firmly gripped within the claw assemblies and will not be dropped during the spinning cycle in the candling station hereinafter described.

(3) *Operation in candling station.*—It will be noted that when the scale assemblies **306** are passing through the egg pick-up station, the selector knobs **331** all point in a direction which is opposite the direction of travel of the scale assemblies as is shown in FIGURE 8. As each of the scale beam assemblies enters the candling station **104**, the selector shafts **317** and **318** of the scale beam assemblies are rotated through 90° by the pin **521** (see FIGURES 17, 19, 20, 21 and 30) so that the knobs **331** point upwardly.

At the same time that the selector shafts of the scale assemblies are being turned, each of the scale assemblies **306** picks up a travelling candling light **481**. The travel of the candling lights is synchronized with that of the scale or transport assemblies so that a candling light is picked up and travels with each scale or transport assembly and stays with it through the entire candling station. As soon as a travelling candling light is picked up by one of the scale beam assemblies, the wiper blade **497** engages the contact members **438** carried by the scale assembly to complete an electrical circuit for energizing the lamp **491** carried by the travelling light. Energization of the lamp **491** causes a beam of light to be directed through the egg in the claw assembly of the scale or transport assembly to which the travelling candling light is attached. As shown in FIGURE 28, this beam of light travels through the egg at a point slightly below the center of the egg.

After the selector shaft of each scale assembly entering the candling station has been rotated 90° and after the scale assembly has picked up a travelling candling light, the scale beam assembly is urged in one direction or another depending upon which of the two types of selector shafts with which the scale beam assembly is associated. As hereinbefore explained, alternate scale beam assemblies are urged in opposite directions by the vertically staggered elongate cams **523** and **524** which engage the cam wheels **341** against the offset springs **313**. Rotation of the selector shafts so that the knobs **331** are in vertical positions permits the scale assemblies to be shifted to the positions shown in FIGURE 30.

As the scale assemblies **306** are urged in opposite directions, they come into engagement with racks **526** and **527**. These racks engage the gear members **364** provided on each of the scale assemblies and as the scale assemblies continue to be advanced, the racks cause rotation of the claw assemblies and the eggs carried thereby. The gear members **364** engaged by the rack **526** are rotated in one direction, whereas the gear members **364** engaged by the other rack **527** are rotated in the opposite direction.

At the same time that the scale assemblies are shifted laterally by the elongate cams **523** and **524**, the travelling candling lights associated therewith are also shifted laterally at the same time, and thus follow the scale assemblies. This lateral shifting of the candling lights is permitted by the type of mounting provided for the travelling candling lights as hereinbefore described.

It is necessary to shift laterally the scale or transport assemblies in the two opposite directions in order to separate the claw assemblies sufficiently so that the claw assemblies can be rotated in the candling station without any danger of striking each other. This is found to be particularly necessary because it is possible that two adjacent claw assemblies can have jumbo eggs inserted therein which would cause a relatively wide spread of the claws. The only other alternative would be to space the scale assemblies further apart on the transport or conveyor assemblies **101**. However, this is normally undesirable because it would make the machine unduly long. Except for the candling operation, the scale assemblies can be relatively close together and, in fact, can be almost side-by-side as shown in the present machine.

From the foregoing description, it can be seen that the eggs carried by the scale assemblies as they travel through the candling station are rotated. During this time, they are observed by the operator in the candling station **104**. The operator is normally sitting down underneath the canopy **541** behind the cloth **542** so that her eggs will be in general alignment with the travelling candling lights and the eggs in the claw assemblies. This makes it possible for the operator to look directly into the egg to observe the quality and condition of the egg in a manner well known to those skilled in the candling art.

The operator in the candling station, after observing the condition of the egg under the candling light and while the egg is being rotated, determines the condition of the egg and, in accordance therewith, positions the selector knob **331** associated with the scale or transport assembly in which the egg is grasped. For example, as shown in FIGURE 30, if the egg is a blood egg, the knob **331** is rotated from the vertical position to the left so that the knob points in a direction facing opposite the direction of travel of the scale assemblies. If the egg is of the commercial type, the knob is rotated through 180° so that it points downwardly. If the egg is a checked egg, the selector knob **331** is turned to the right through 90° so that the knob faces in the direction of travel of the scale assemblies. If the egg is a good egg which will be the most common situation, the knob **331** is left in its vertical position.

Thus it can be seen that the operator in the candling station can rapidly and readily candle the eggs passing through the candling station merely by turning the selector knobs to the necessary positions corresponding to the condition and quality of the eggs. It is only necessary to turn the selector knobs of the scale assemblies which do not contain good eggs. During this candling operation, the transport conveyor assembly **101** with its scale assemblies **306** is advancing continuously. The knobs **331** can be readily turned to the desired position while the scale assemblies are moving. The candling station extends over a sufficient length of the transport or conveyor assembly **101** so that there is more than adequate time for the operator in the candling station to view the eggs as they pass through the candling station and to then operate the selector knobs **331** to the desired positions.

With the type of candling provided in this machine, it is believed that a better quality evaluation can be made of the eggs passing through the machine. The eggs are actually rotated, not spun. We have found that it is desirable to rotate the egg at such a rate that the liquid contents within the egg turn at the same rate as the shell of the egg. This movement of the egg is sufficiently gentle so that the true character of the egg is not disturbed. The egg is not spun, or in other words, not rotated fast enough so that the yolk comes outwardly because of centrifugal force toward the shell. If such were the case, it is believed that the liquid contents of the eggs would be unduly disturbed to make it more difficult to analyze the true quality of the egg. We have found that it is most desirable to rotate the eggs at approximately 40 revolutions per minute. However, it has been found that rotation from 15 r.p.m. to 60 r.p.m. will still permit successful candling in our machine.

It also should be pointed out that one particular advantage of our machine is that the eggs are picked up in the

same vertical position as they arrive from the producer and are maintained in that same vertical position throughout their travel in the machine as hereinbefore and hereinafter described. In other words, the eggs are always maintained in a captive position and are not allowed to roll. This maintaining of the vertical position of the egg is particularly advantageous in facilitating determination of the true quality of the egg.

As is well known to those skilled in the art, no two eggs are identical as to shape, shell texture, white viscosity, and, most importantly, with respect to the position of the yolk within the white. In a high quality fresh egg, the yolk is spherical. It is encased in thick viscous white which, in turn, is surrounded by a thinner white. When the egg is placed in a vertical position with the small end down, the yolk is well centered from side to side. Its specific gravity will cause it to rise until the center is approximately sixty percent from the bottom and forty percent from the top. When the yolk is not so positioned, the egg is not a high quality fresh egg. This is because as the egg deteriorates, the white penetrates the yolk to cause a change in specific gravity of the yolk. The yolk then begins to sag or settle to the bottom of the egg depending upon the degree of white penetration in the egg. For reasons still undetermined, but most likely due to bacterial contamination, the yolks will move off-center or rise to the top of a vertically placed egg. This phenomenon can occur in fresh eggs 48 to 72 hours old. Thus, eggs of the same degree of freshness can have a marked variation in quality. It is for determining these variations in quality that eggs are candled, as well as for removing other defects such as checks, bloods, malformations and stains.

To determine the true quality of the egg, the egg must be held in a vertical position for at least several hours. This permits the yolk to assume its true position within the egg. If the eggs are rolled in a horizontal position, violently churned or tumbled in any fashion, the yolk will move back to the center or the original position thereby concealing the true quality of the egg. In our egg handling and grading machine, by handling the eggs and picking up the eggs in the same position in which they are received from the producer, the yolks in the eggs will be in their true positions so that the true quality of the eggs can be observed as they pass through the candling station. The eggs at no time are tumbled or rolled about during the handling and grading operation. They are only gently rotated in the candling station to facilitate the candling.

As the scale assemblies **306** leave the candling station, they are separated from the travelling candling lights **481** and the contact is broken between the wiper blade **497** carried by the travelling candling light and the contact members **438** carried by the scale beam. As soon as this occurs, the lamp **491** is deenergized.

As can be seen from FIGURE 6, the candling lights travel in a continuous endless path. After they have been separated from a scale assembly, they are again returned to a position where they can be picked up by another scale assembly. The candling lights are aligned as they return to the candling light pick-up position by the guide members **536** which position the candling lights **481** in a central or mid-point position corresponding to the entering position of the scale assemblies.

During the travel through the candling station, the scale assemblies although shifted laterally, are maintained in a substantially horizontal position by the cam track **430**.

(4) *Operation in the blood station.*—Upon leaving the candling station, the scale assemblies **306** are permitted to shift to their respective lateral positions in accordance with the positioning of the selector shafts. As can be seen from FIGURE 33, upon leaving the candling station, the cam wheels **341** move out of engagement with the elongate cams **523** and **524** and permit the mounting blocks **307** of the scale assemblies to be shifted in one direction or the other by the offset springs **313** as hereinbefore described.

The position which is assumed by the blocks **307** is determined by the notch which is facing downwardly on the selector shaft and which is engaged by the spring urged lock bar **326**. The blocks **307** mounted on the selector shafts which have their selector knobs **331** pointing upwardly are shifted immediately to their extreme offset positions by the offset springs **313** so that they come into engagement with the end of the notches **319** as shown in FIGURE 34. These are what may be called the good egg positions and are the full rear and full forward positions for the scale assemblies.

When the selector knobs **331** are pointed in the same direction of travel of the scale assemblies **306**, the blocks **307** on the selector shafts **317** will be moved forward to positions one-half forward beyond the center position to the end of the notches **320**. The blocks **307** on the selector shafts **318** will be moved rearward to positions one-half forward beyond the center position to the end of the notches **320** in the selector shafts **318**, as shown in FIGURES 17, 18, 33 and 34. Thus, all of the blocks **307** and the scale assemblies carried thereby having their associated selector knobs **331** pointed in the same direction as the direction of travel of the scale assemblies will be aligned in one-half forward positions. The latch arms **396** are also aligned as shown in FIGURE 34.

When the selector knobs **331** are turned so they face in an upward direction, the blocks **307** on the selector shafts **317** will be moved forward to central positions to the end of the notches **321** in the selector shaft **317**, and the blocks **307** on the selector shafts **318** will be moved rearward to central positions to the end of the notches **321** in the selector shafts **318**. Thus, the mounting blocks **307** for all of the scale assemblies in which the selector knobs **331** point in an upward direction will be aligned in a central position. The latch arms **396** of these scale assemblies are also aligned as shown in FIGURE 34.

When the selector knobs are pointed in a downward direction, the blocks **307** on the selector shafts **317** will remain in the positions they had in the candling station, that is, in positions one-half rearward of the central position and the lock bars **326** will be in engagement with the end of the notches **322**. The mounting blocks **307** on the selector shafts **318** will be moved rearward to a position one-half rearward of the central position to the end of the notches **322** in the selector shafts **318**. Thus, the latch arms **396** of all the scale assemblies having their selector knobs pointing in a downward direction will be aligned in the one-half rearward position.

From the foregoing, it can be seen that as soon as the scale or transport assemblies **306** leave the candling station, they will immediately take up lateral positions which correspond to the positions of the selector knobs **331** of the scale assemblies. This makes it possible to dump or discharge the eggs from the scale assemblies as hereinafter described in accordance with the manner in which they have been classified by the operator in the candling station.

Immediately after the scale assemblies have assumed their respective positions in accordance with the positions of the selector knobs **331**, they pass through the blood drop station **106** and the latch arms **396** which are in the central position come into engagement with the unlatching member **551** (see FIGURE 35). The latch arms **396** are tripped thereby to release the block **376** and the latch lever **377** connected thereto to permit the same to drop downwardly. The depressor rod **361** is thus released to permit opening of the claw assembly **367** and dropping of the egg carried thereby into the blood chute **552**. The egg, as soon as it hits the blood chute **552**, is broken and drops into the container **553**.

The unlatching member **551** is insulated from ground and is connected to the counter **556** mounted on the machine. When the member **551** engages the latch arm

396, a ground connection to the counter 556 is established so that the number of eggs discharged at the blood drop station can be counted by the counter 556.

(5) *Operation at commercial drop and check drop stations.*—After the scale assemblies 306 have passed through the blood drop station 106, the scale assemblies pass into the check drop station and then into the commercial drop station. Either one of these stations may be the first of the two stations without affecting the operation of the machine. The scale beam assemblies 306 in both of these stations are maintained in a substantially horizontal position by the cam track 430. Let it be assumed that the commercial drop station is the second station encountered by the scale assemblies after they have passed out of the blood drop station 106.

As the scale or transport assembly 306 moves into the commercial station, the roller 421 carried by the rear end of the scale beam assembly passes into engagement with the switch plate assembly 585 associated with the commercial drop station. As pointed out previously, the switch plate assembly 585 is substantially identical to the switch plate assemblies utilized in the weighing stations with the exception that the plungers 592 have depending portions 592*a* which are relatively narrow and which are only adapted to be engaged by the rollers 421 of the scale beam assemblies which are in the one-half rearward position or in the commercial egg position as shown in FIGURE 38. The switch plate assembly 585 includes seven switches as shown in the circuit diagram in FIGURE 68.

As explained previously, the commercial drop station also includes a solenoid assembly 560. This solenoid assembly, as explained previously, is identical to solenoid assembly 560 used in the weighing stations with the exception that a fixed post 584 is used in place of the first solenoid SO–1. Operation of this solenoid assembly 560 and the switch plate assembly 585 in conjunction with the control circuitry contained in the control cabinet 781 can best be described in conjunction with the circuit diagram shown in FIGURE 68. To facilitate this description, let it be assumed that all of the relays RY1–RY5 are in the cancelled position and that a new row of eggs is to be started in the tray in the stub conveyor 116 disposed below the claw assemblies of the scale assemblies which are in the one-half rearward position or, in other words, in the commercial egg position.

Now let it be assumed that one of the scale assemblies in the commercial position enters the commercial drop station. The roller 421 carried by the scale assembly travels in the cam track 430 and causes upward movement of the plungers 592 in the switch plate assembly 585 to cause operation of the switches S1–S5. The first switch to be operated is switch S5–1. However, nothing occurs because at this time none of the relays RY1–RY5 are energized. The scale assembly, therefore, continues to travel down through the commercial station and nothing occurs until switches S2–1 and S2–2 are energized. The closing of the contacts of switch S2–2 closes a circuit for advancing the stepping switch S9. As explained previously, the stepping switch S9 is the type which is advanced when the switch contacts are broken. Therefore, the stepping switch S9 is not moved from its home position to terminal one until contacts S2–2 are opened. The stepping coil 801 of stepping switch S9 is connected to output of the rectifier 802 which has an output of 110 volts D.-C. The circuit is completed from the rectifier 802 through the stepping coil 801, through the switch S2–2, through contacts 1 and 2 of the tray-carton switch S8, to the other common side of the rectifier 802.

Deenergization of the coil 801 by opening of switch S2–2 causes advancement of the stepping switch from the home position to terminal one. This completes a circuit for energizing the coil of relay RY1. This circuit is completed from the transformer T1 through contacts 1 and 2 of relay RY5 which serve to bypass the cancelling switch S6 as hereinafter described through the winding of relay RY1 to terminal one of level 1 of switch S9, through the wiper of level 1 of switch S9, through contacts 4 and 5 of the tray-carton selection switch S8 to ground. Thus, operation of the switch S2–2 causes energization of relay RY1.

Closing of the switch S2–1 causes energization of the winding of relay RY2. This circuit is completed through the same bypass circuit consisting of contacts 1 and 2 of relay RY5 as the circuit for energizing relay RY1 and then through the winding of relay RY2 through contacts 8 and 9 of relay RY1 which are now closed, through switch S2–1 to ground.

Energization of relay RY1 also causes closing of its contacts 5 and 6 which establishes a holding circuit for relay RY1. Energization of relay RY2 closes contacts 5 and 6 to establish a holding circuit for relay RY2. Closing of contacts 2 and 3 of relay RY2 establishes a circuit for energization of the solenoid SO–2 to bring the unlatching lever 573 down into an unlatching position. The lever 573, however, does not engage the latch arm 396 of the scale assembly because the scale assembly is already past this position. Closing of contacts 8 and 9 of relay RY2 establishes a circuit for the subsequent energization of relay RY3 as hereinafter described.

From the foregoing, it can be seen that when a scale assembly causes operation of switches S2–1 and S2–2, relays RY1 and RY2 are operated. They will remain operated as the scale assembly passes out from under the plunger 592 for operating switches S2–1 and S2–2 because of the holding circuits hereinbefore described.

The roller 421 of the scale assembly next causes operation of switch S1–1 which closes a circuit to the counter 556 to indicate that a scale assembly containing a commercial egg is passing through the commercial station.

Shortly thereafter, the latch arm 396 of the scale assembly in the commercial station strikes the fixed post 584 which is provided as part of the solenoid assembly 560 to drop the commercial egg in the claw assembly 367 into the first pocket in the tray 664.

Now let it be assumed that a second scale assembly containing a commercial egg passes in the commercial station. Nothing occurs in the commercial station until switch S3–1 is operated. Operation of switch S3 energizes the winding for relay RY3. This is completed through the bypass circuit consisting of contacts 1 and 2 of relay RY5 through the winding of relay RY3 through closed contacts 8 and 9 of relay RY2, and through switch S3–1 to ground. Energization of relay RY3 causes closing of its contacts 2 and 3, 5 and 6, and 8 and 9. Closing of its contacts 2 and 3 establishes a circuit for energizing the solenoid SO–3 to move the unlatching lever 573 down into an unlatching position. This, however, does not strike the unlatching arm 396 of the scale beam assembly because the scale assembly is already past this position. Closing of contacts 5 and 6 establishes a holding circuit for relay RY3, and closing of contacts 8 and 9 of relay RY3 establishes a circuit for subsequent energization of relay RY4 as hereinafter described.

The scale beam assembly continues its travel through the commercial station. At the second pocket position in the tray, the latch arm 396 of the scale assembly strikes the already lowered unlatching lever 573 of the solenoid SO–2 to drop the egg in the second pocket in the tray. It should be noted that the solenoid SO–2 remains energized even after an egg has been released by the unlatching lever 573 of the solenoid. The scale beam assembly continues through the station and a count is registered at the time switch S1–1 is operated. The latch arm 396 also strikes the post 584; however, nothing occurs because the egg already has been dropped in the second pocket in the tray.

The passage of the next commercial egg into the commercial station causes operation of switch S4–1 and operation of relay RY4 in a manner similar to that here-

inbefore described. This egg is dropped in the third pocket in the tray when the latch arm **396** strikes the unlatching lever **573** of the solenoid SO–3. The latch arm **396** also strikes the unlatching lever **573** of the solenoid SO–2 since this solenoid is still energized and also the fixed post **584**. However, this has no effect because the egg has already been dropped.

When the fourth commercial egg passes into the commercial station, relay RY5 is energized by switch S5–1. Thus, relay RY5 is energized when the fourth commercial egg in a row passes into the commercial station. It will be dumped into the fourth pocket in the tray by the unlatching lever **573** of the solenoid SO–4.

When relay RY5 is energized, the bypass circuit established by its contacts **1** and **2** is opened so that relays RY2, RY3 and RY4 are deenergized the next time the cancelling cam **791** opens the switch S6.

It should be pointed out that each time a commercial egg passes the commercial station and operates switch S2–2, the stepping switch S9 is advanced one additional step through a circuit hereinbefore described. Thus, when the fourth egg in a row has passed through the commercial station, the wipers will be on terminal four.

Now let it be assumed that the fifth commercial egg passes into the commercial station. It will be dropped in the fifth pocket in the tray when the latch arm **396** engages the unlatching lever **573** of the solenoid SO–5. At the same time, the insulated contact **573***a* carried by the lever **573** establishes a circuit to ground through the latch arm **396** for energizing the winding of relay RY6. This relay RY6 is energized from the transformer T1 through the winding of relay RY6, through the microswitch MS–3 to ground. Closing of the contacts of relay RY6 establishes a circuit for energizing the D.-C. clutch coil **804** of the magnetic clutch **702** from the rectifier **806** which has suitable output such as 90 volts D.-C. Energizing the clutch **702** advances the conveyor chain **671** in the stub conveyor **116** and the trays carried by the stub conveyor. The advance continues until the circuit for maintaining energization of relay RY6 is interrupted by rotation of the cam wheel **706** to open the microswitch MS–3. The raised portions on the cam **706** are positioned so that the tray will be advanced a sufficient amount to place a new row of pockets under claw assemblies **367** having commercial grade eggs therein.

During the time the conveyor is being advanced, the scale assembly which contains the fifth egg continues through the commercial station and causes operation of switch S2–2 which advances the stepping switch S9 to terminal **5**. It also operates the other switches, but nothing occurs except that a count is registered by switch S1–1.

Now let it be assumed that a sixth egg of commercial grade comes into the commercial station. Nothing will occur until the scale assembly carrying the sixth commercial egg operates switches S2–1 and S2–2 because the relays are all in a deenergized position identical to that hereinbefore described when the first egg passed into the commercial station. This causes advancement of the stepping switch S9 to terminal six which causes energization of relay RY1 through terminal six of the stepping switch in a manner similar to that hereinbefore described. Therefore, this sixth egg will be dropped in a first pocket in the second row in the tray **664**. As other commercial eggs enter the commercial station, they will be deposited in the proper pockets in the tray in a similar manner. The stepping switch **59** is advanced with wiper arms so that when it is advanced to the tenth terminal, another wiper arm will engage the first terminal on the next step. For that reason, the apparatus can operate continuously.

If for some reason it should be desirable to reset the entire circuitry, a reset switch S7 has been provided and is available to the candling operator. The closing of switch S6 causes energization of the stepping coil **801**. This circuit is completed from the rectifier **802** through the switch S7, through the interruptor contacts **807**, through the off-normal contacts **808**, through the stepping coil **801** to the other side of the rectifier **802**. When the step coil **801** is energized, the contacts **1** and **2** of the interrupter contacts **807** are opened to deenergize the coil **801** to cause advancement of the step switch S9 one position. Deenergization of the step coil **801** permits the interrupter contacts **807** to close to again energize the winding **801** and opening of the contacts **1** and **2** of the interrupter contacts **807** to cause the same sequence of operation, and, therefore, rapid stepping of the stepping switch. This rapid stepping of the stepping switch continues until the off-normal contacts **808** are opened by the sliding contact **809** engaging one of the raised portions **811** provided on the disk **813**. The disk **813** is a part of the stepping switch and is connected to the wipers **814** of the stepping switch.

Now let it be assumed that it is desired to use cartons instead of trays on the stub conveyor **16**. When this is the case, the tray-carton switch S8 is switched to the carton position which is the right-hand position shown in FIGURE 68 to close contacts **2** and **3**, and **5** and **6**. Now let it be assumed that a commercial grade egg comes into the commercial station. The switches S5–1 and S5–2 will first be operated. Closing of switch S5–2 advances the stepping switch from the home position to the number one position in a manner similar to that hereinbefore described for switch S2–2. Thus, the circuit is completed from one side of the rectifier **802** through the steppng coil **801**, through switch S5–2, through contacts **3** and **4** of the tray-carton switch S8 to the other side of the rectifier **802**. The wiper for the second level of stepping switch S9 is advanced from the home position to the number one position to establish a circuit for energizing the winding of relay RY4 through the bypass circuit provided by contacts **1** and **2** of relay RY5 as hereinbefore described. This energization of relay RY4 causes energization of the solenoid SO–4 to cause lowering of the unlatching arm **573** by the solenoid.

It should be explained that when cartons are utilized, the cartons are advanced to provide rows of two pockets underlying the solenoids SO–4 and SO–5. The first egg is, therefore, dropped in the first pocket of the carton by the latch arm **396** engaging the unlatching lever **573** of the solenoid SO–4. The commercial eggs are again counted by the switch S1–1.

Closing of the switch S5–1 causes energization of the relay RY5 in a manner similar to that hereinbefore described. The next egg passing into the commercial station is dropped in the second pocket by the unlatching lever **573** of the solenoid SO–5 which is already in the unlatching position because of the energized condition of relay RY5.

At the time that the latch arm **396** strikes the unlatching lever **573**, the insulated portion **573***a* engages the latch arm **396** to establish a circuit for energizing the relay RY6 for advancing the conveyor **671** in a manner as hereinbefore described.

The stepping switch S9 will be advanced by each closing of the switch S5–2 so that it is in the proper position for energizing relay RY4 when the next row in the carton is advanced under the claw assembly. Thus, it can be seen that the circuits are connected to the third, fifth, seventh and ninth terminals of the level **2** of switch S9 for completing a circuit for relay RY4.

From the foregoing, it can be seen that means has been provided for properly advancing trays or cartons in the stub conveyor and for dropping the eggs of commercial grade in the proper sequence in trays or cartons. Thus, when trays are utilized, the eggs are dropped in rows of five, whereas when cartons are used, the eggs are dropped in rows of two.

The operation at the check drop station is identical to that of the commercial station hereinbefore described. The unlatching levers of the solenoid assembly **560** utilized for the check station are so positioned that they

are adapted to be engaged by the latch arms **396** in the half forward position.

It can be seen from the foregoing that when the scale assemblies **306** have travelled through the blood drop station and then the commercial drop and check drop stations, only good eggs remain in the scale assemblies that have passed through these three stations.

(6) *Operation in the weighing station.*—After the scale assemblies have passed through the commercial and check stations as hereinbefore described, all the selector shafts **317** and **318** of the scale assemblies are rotated except the ones that are already in the blood position so that all of the selector knobs **331** point in a direction opposite to the direction of travel of the scale assemblies or, in other words, into blood positions by the latches **604–607** as shown in FIGURES 40 and 42.

While the selector knobs are being turned back to positions in which the selector knobs **331** face in a direction opposite the direction of travel, the blocks **307** of the scale assemblies are being urged into a central position against the offset spring **313** by the cams **601** and **602** carried by the members **297** (see FIGURE 39). As the blocks **307** are returned to the central positions, they become locked in these central positions by the lock bars **319** which engage the notches **321** in the selector shafts **317** and **318**. The scale assemblies **306** must be aligned in this manner so that they can properly pass through the weighing stations as hereinafter described.

The operations which take place in the extra large, large, medium and small stations are identical. The operations which take place in the jumbo and peewee stations are similar. In the jumbo station, the operation is substantially identical except for the fact that since the jumbo eggs are so large, only four of the jumbo eggs can be placed in a row rather than five eggs in a row in all the other stations. For this reason, the solenoid assembly **560** is only provided with four solenoids rather than five solenoids. In the same manner, the switch plate assembly **585** needs one less plunger and switch, and the slicer bar **616** needs one less down slot **619**.

Since the operations in all the weighing stations are so similar, the operations in only one weighing station will be described in detail, other than the operations in the peewee station. The operations in the extra large station will, therefore, be chosen as being representative. As the scale assemblies **306** approach a weighing station, the cam track **430** provided by the upper and lower rails **431** and **432** widens substantially as shown at **430***a* to give freedom of vertical movement to the ends of the scale assemblies on which the wheels **421** are mounted. As explained previously, the lower rail **432** inclines downwardly continuously, whereas the upper rail **431** inclines between stations and is parallel in the weighing station. The parallel portions are formed by the plates **586** of the switch plate assemblies **585**. As explained previously, the weighing stations are arranged so that heaviest eggs are weighed first. This makes it possible for the track **430** to incline downwardly as hereinbefore described.

Each scale assembly **306**, as it enters the portion **430***a* of the cam track **430** which permits relative vertical movement of the wheels **421**, seeks a balance position determined by the weight of the egg carried in its claw assembly **367**. A heavy egg in the claw assembly **367** urges the wheel **421** upwardly toward the upper runner or rail **431**, whereas a lighter egg permits the wheel **421** to drop toward the lower rail or runner **432**.

To ensure that proper weighing will take place, the scale assemblies are all properly adjusted before the machine is placed in operation. As shown in FIGURE 45, the scale assembly is arranged so that it is possible for it to weigh five different grades of eggs as, for example, jumbo, extra large, large, medium and small. As is well known to those skilled in the art, the weights of eggs required to meet certain grades have been established in state and federal regulations. As being typical of such regulations, the following is set forth below.

MINIMUM WEIGHTS FOR EGGS AS GOVERNED BY STATE AND FEDERAL REGULATIONS

	Per case of 30 doz., lbs.	Per dozen, oz.	Per each, oz.	Safety factor, in grams	Minimum grams
Jumbo	56	30	29/12	68.52+.25	68.77
Extra Large	50.5	27	26/12	61.43+.25	61.68
Large	45	24	23/12	54.34+.25	54.59
Medium	39.5	21	20/12	47.25+.25	47.50
Small	34	18	17/12	40.17+.25	40.40
Peewee	28	15	15/12	35.44+.25	39.40

Our scale assemblies can be readily adjusted to grade eggs into such grades and can do so within less than one gram in each grade. In adjusting the scale assemblies for such grading operations, the main weight or the pendulous weight **411** is adjusted for the overall range of the scale assembly. Movement of the pendulous weight **411** downwardly from the scale beam **348** decreases the range, whereas movement of the weight upwardly toward the beam **348** increases the range. The small weight **416** is then used for the balance weight.

In calibrating a scale assembly **306**, an egg in the jumbo classification is placed in the claw assembly **367** after the pendulous weight has been roughly adjusted for an approximate position. The balance weight **416** is then adjusted to zero for the upper end of the scale. The jumbo egg is then taken out and a small egg is put in the claw assembly. If the pointer **427** is then too low, then the range is too great and the range must be decreased by lowering the weight **411**. When this is done, the jumbo egg is put back in the scale assembly and the scale assembly is again zeroed by utilizing the balance weight **416**. The small egg is then placed in the claw assembly **367** to see if the pointer **427** takes a proper position on the lower end of the scale. If not, the range weight **411** is again adjusted in the proper direction. This procedure is continued until the pointer **427** takes proper positions for the jumbo and small eggs. All the grades including the intermediate grades will then be properly weighed by the scale assembly.

Now let it be assumed that all of the scale assemblies **306** have been properly calibrated as hereinbefore described and that a scale assembly containing an egg in the extra large classification in claw assembly **367** is entering the extra large weighing station. Immediately before entering the extra large weighing station, the balance beam will seek a balance position in accordance with the weight of the egg. As each scale beam assembly enters the weighing station, it will approach a splitter bar **616** which has been properly positioned so that all the tips **427** of the scale assemblies having eggs in their claw assemblies greater in weight than the weight classification for which the splitter bar has been set will pass over the top of the splitter bar. The knife edge **616***a* provided on the splitter bar serves to make a very fine separation between the different weights of eggs carried by the scale assemblies. Any scale assembly having its tip only slightly below the knife edge **616***a* will be urged downwardly so that it will be graded in the succeeding stations. All of

the tips 427 which pass above the knife edge 616*a* are connected to scale assemblies which have eggs in them which are within the classification of the weighing station through which the scale assemblies are passing. All of the heavier eggs have already been dumped in the preceding weighing stations.

Now let it be assumed that the circuitry shown in FIGURE 69 is in the condition shown and that it is desired to fill a row in a tray positioned in the main conveyor section 632 and that the first egg is to be deposited in the first pocket in the row. With this assumption, now let it be assumed that the first egg of the classification being considered, for example, an egg of the extra large classification has entered the extra large station and has caused the tip 427 of the scale assembly carrying the egg to pass above the splitter bar 616 in the weighing station.

As the scale assembly progresses in the weighing station, it comes in contact with the switch plate assembly 585 and causes operation of the switch actuator plungers 592. Switches S5–1 and S5–2 are first operated. Nothing occurs upon closing of switch S5–1 because relays RY1–RY5 are deenergized. Closing of switch S5–2 merely actuates the counter 556 located at the front end of the machine to indicate that an extra large egg has entered the extra large weighing station. Nothing else occurs until the wheel 421 of the scale beam assembly urges the last plunger 592 upwardly to close switches S1–1 and S1–2. Closing of the contacts S1–2 causes energization of relay RY1. This circuit is completed from the output of the transformer T1 and through contacts 1 and 2 of relay RY5 which serve as bypass contacts for bypassing the cancelling switch S6 for the same purpose as the cancelling switch S6 is bypassed in the diagram shown in FIGURE 68. The circuit is continued through contacts 5 and 6 of the two or five drop control relay RY8. This relay is energized because the microswitch MS3 is operated by the tray in the conveyor to close its contacts 2 and 3 to energize the relay RY8. The circuit for energizing relay RY1 continues through the winding of relay RY1 through the switch S1–2 to ground.

Energization of relay RY1 closes its contacts. Closing of its contacts 5 and 6 establishes a holding circuit for the relay. Closing of its contacts 2 and 3 establishes a circuit for energizing the solenoid SO–1 through the switch S1–1 to ground. The energization of this solenoid SO–1 causes the unlatching lever 573 to be lowered so that it is engaged by the latch arm 396 of the scale assembly as the scale assembly progresses to thereby drop the extra large egg in the claw assembly 367 into the first pocket in the tray 664 in the conveyor. Closing of the contacts 8 and 9 of relay RY1 establishes a circuit for energization of the relay RY2.

As soon as the first egg has been dumped or discharged from the scale assembly, the wheel 421 and the tip 427 mounted on the end of the scale assembly will have a tendency to move downwardly. Therefore, immediately after the scale beam assembly has passed the position where it has dumped the egg, it will drop down into one of the down slots 619 and will ride upon the lower rail 621 provided on the splitter bar 616, as shown in FIGURE 47. This moves the wheel 421 on the scale assembly out of contact with the switch plate assembly 585 so that it cannot operate succeeding switches on the switch plate assembly 585. There are no succeeding switches when the first egg is discharged, but there are succeeding switches when the other eggs are discharged, as hereinafter described, and it is for this reason the down slots 619 are provided.

Now let it be assumed that a second egg of the same classification passes over the splitter bar 616. The egg will be counted as the contacts S5–2 are closed. Nothing occurs thereafter until switches S2–1 and S2–2 are operated. Closing of switch S2–2 establishes a circuit for energization of the relay RY2 through the contacts 5 and 6 of relay RY7, through the winding of relay RY2, through contacts 8 and 9 of relay RY1, through the switch S2–2 to ground. Energization of relay RY2 closes its contacts 2 and 3 to energize the solenoid SO–2 through the switch S2–1. Closing of contacts 8 and 9 establishes a circuit for energization of relay RY3. Energization of the solenoid SO–2 causes the second egg to be dropped into the second pocket in the tray. Thereafter, the tip 427 of the scale assembly drops into one of the down slots 619 of the splitter bar 616 so that succeeding switches are not operated on the switch plate assembly.

The third egg entering the weighing station causes operation of relay RY3 in the same manner and the same is true for the operation of relay RY4 when the fourth egg of the same classification enters the weighing station.

It will be noted that at the time the solenoid SO–4 is energized, the solenoid SO–5 is also adapted to be energized by closing of the contacts S5–1. Thus, when the fifth egg in the same classification enters the weighing station, the closing of the contacts S5–1 will cause immediate energization of the solenoid SO–5 to cause the egg to be dropped in the fifth pocket when the latch arm 396 engages the unlatching lever 273 of the solenoid. At the same time, that is when the latch arm 396 strikes the unlatching lever 273, the insulated contact member 273*a* carried by the fifth lever arm 573 is grounded on the latch arm 396 to establish a circuit for the energization of relay RY5 through the contacts 8 and 9 of relay RY4, through the winding of relay RY5 and over the same path as described for the other relays.

Operation of relay RY5 opens the contacts 1 and 2 so that relays RY1–RY4 are deenergized the next time the cancelling cam 791 opens the switch S6. Closing of contacts 5 and 6 of relay RY5 establishes a holding circuit for relay RY5. Closing of contacts 8 and 9 of relay RY5 establishes a circuit for the energization of the winding of relay RY6, which can be called the conveyor indexing relay. This relay RY6 is energized because the trays are advanced with five pockets in a row. Five eggs have been dropped in the row and now another row in the tray must be advanced. Operation of relay RY6 causes this to occur by closing its contacts 5 and 6, and 8 and 9 to apply a D.-C. voltage from the rectifier 806 to the clutch winding 804. Energization of the winding 804 causes operation of the clutch 702 to cause rotation of the sprocket 686 to cause rotation of the shaft 677 and the chain 671 driven thereby to advance the conveyor and the trays mounted thereon. This advancement continues until the microswitch MS–3 is opened by one of the raised projections on portion 706*a* of the cam wheel 706 to cause deenergization of the winding for relay RY6.

The operation of the cam wheel 706 and the cancelling cam 791 is such that the switch MS–3 has an opportunity to close before the switch S6 is opened by the cancelling cam 791 to deenergize the relay RY5. Thus, the tray is advanced to a position determined exactly by positioning of one of the raised projections on the cam portion 706*a*. As explained previously, the raised projections of the cam portion 706*a* are angularly disposed so that the trays are advanced properly in the conveyor. Thus, another row of pockets in the tray will be advanced so that it will underlie the claw assemblies of the passing scale assemblies. The same sequence of operation as hereinbefore described takes place to fill the next row in the tray, after which the trays are again advanced in the same manner. This same operation continues as long as eggs are discharged in the weighing station.

Now let it be assumed that it is desired to deposit the eggs in cartons of the Tri-strut type. When this is the case, the microswitch MS–6 is not operated and the relay RY8 is in a deenergized position. The Tri-strut cartons 667 are arranged on the conveyor so that the pockets are advanced two abreast. Now let it be assumed that a carton has been advanced and that it is desired to deposit eggs in the cartons.

When the scale assembly having an egg of the proper

classification enters the weighing station, the first thing that will occur is that switch S5–2 will be operated to actuate the counter 556. Nothing else occurs until the wheel 421 of the scale assembly causes operation of switches S4–1 and S4–2. Operation of switch S4–2 causes energization of relay RY4 from the transformer T1 through the bypass contacts 1 and 2 of relay RY5 to the winding of relay RY4, through contacts 1 and 2 of relay RY8 and through switch S4–2 to ground. Closing of switch S4–1 energizes the solenoid SO–4 so that the egg carried in the scale assembly is dropped in the fourth position which corresponds to the first pocket in the Tri-strut carton 667. Thereafter, the tip 427 of the scale assembly drops into the next down slot 619 and continues on its forward motion.

It will be noted that it is impossible for one of the scale assemblies to operate the relays RY1, RY2 and RY3 with the microswitch MS–6 in the position shown because the power is removed from one side of the windings for these relays.

Now let it be assumed that the second egg of the same classification enters the weighing station. As it enters the weighing station, the solenoid SO–5 is energized by the closing of switch S5–1 to cause the egg carried in the claw assembly 367 to be dropped in the second pocket. At the same time, an electrical circuit is established for energizing relay RY5 through the insulated contact 573*a* carried by the lever arm 573 of the solenoid SO–5 and the latch arm 396 of the scale beam assembly. Energization of relay RY5 opens its contacts 1 and 2 so that relay RY4 is deenergized the next time the cancelling switch S6 is opened by the cancelling cam 791.

Closing of contacts 5 and 6 of relay RY5 establishes a holding circuit for relay RY5. Closing of contacts 8 and 9 of relay RY5 establishes a circuit for energizing relay RY6. This circuit is completed from the transformer T1 through the winding of relay RY6, through contacts 8 and 9 of relay RY5 to ground. A holding circuit is at this same time established for relay RY6 from the transformer T1 through the winding of relay RY6 through contacts 6 and 7 of relay RY7, through contacts 2 and 3 of switch MS7, through the contacts of MS5 to ground. The microswitch MS7 is operated by the lid of the carton and, for that reason, its contacts 2 and 3 are closed. The timing of the cam portion 706*a* and the cancelling cam 791 is such that the switch MS5 has had an opportunity to close before the cancelling cam 791 opens the switch S6. Relay RY6 is, therefore, placed under the control of MS–5 before relay RY5 is deenergized by the opening of switch S6. Thereafter, the conveyor section 632 operates to advance the carton 667 in a manner similar to that hereinbefore described so that another two eggs can be placed in the carton. As soon as the carton has been advanced sufficiently, the microswitch MS–5 is opened to deenergize the winding for relay RY6 which deenergizes the clutch 804 and stops movement of the conveyor. The same sequence of operation then takes place to load eggs into the next two pockets of the carton.

When it is desired to uzilize the Case-Ace carton 666 rather than the Tri-strut carton, the microswitch MS–7 is not operated and, therefore, the circuit for relay RY6 is completed through contacts 1 and 2 of MS–7 through MS–4 to ground. In other respects, the operation of the circuitry is identical to that described for the Tri-strut carton.

From the foregoing, it can be seen that eggs of any classification can be automatically loaded into trays or cartons without any difficulty. The entire operation is automatic and is controlled by the cartons or trays themselves as they are advanced by the main conveyor assembly 117. Therefore, the conveyor automatically makes a change-over when different types of cartons or trays are loaded into the conveyor assembly. As the cartons or trays are filled, they are advanced onto the belt 731 and discharged onto the belt 741 which carries them to a loading station.

The operation in the other weighing stations is substantially identical to that hereinbefore described for the extra large station. The scale assemblies 306, after they have travelled through one weighing station and below the splitter bar 616 in the weighing station, assume a balance position in one of the other weighing stations. If the eggs carried in the scale assemblies are of the proper weight, the tips 427 of these scale assemblies pass above the splitter bar in that weighing station and have their eggs dumped or discharged in that weighing station in the same manner hereinbefore described.

Because of a unique problem involved with peewee eggs, it is necessary that different circuitry and means be utilized for discharging the same, as hereinafter described.

(7) *Operation at the peewee station.*—After the scale assemblies pass through the small weighing station, the ends of the scale beam assemblies on which the rollers 421 are mounted are brought upwardly so that the scale beams of the scale assemblies are in a generally horizontal position.

Because it is impossible for the scale assemblies to determine the difference between no egg in the claw assembly 367 and a peewee egg in the claw assembly, additional means must be provided as hereinbefore described to detect whether or not an egg is present in the claw assembly. Photoelectric means 760 of the type hereinbefore described has been provided to give such information. The operation of this photoelectric means in conjunction with the circuitry shown in FIGURE 70 may be briefly described as follows:

When an egg is detected in one of the claw assemblies 367 of the scale assemblies 306, the photoelectric relay 765 is operated to complete a circuit to advance the step switch S25 from its home position to its number one terminal. The circuit is completed from the power supply 767 consisting of full wave rectifier 768 and filtering capacitors 769 through the step coil 825 of the step switch S25 through the interrupter contacts 826 of switch S25, through the contacts of the photoelectric relay to the other side of the power supply 767. Now let it be assumed that this first peewee egg which has been sensed in the scale assembly is to be placed in the first pocket of a tray 664.

After the peewee egg has been sensed, the pulsing cam 796 closes switch S16 to apply a pulse to step switch S21 to advance the step switch S21 from its home position to its terminal one. The circuit is completed from the power supply 767 through the switch S16, through the wiper 827 of level 1 of switch S21, through terminal 1, through the interrupter contacts 826 of switch S21, and through the stepping coil 825 to the other side of the power supply 767.

The step switch S25 is also advanced by the same pulse so that its wipers 827 are moved to terminal two. This circuit is completed from the power supply 767 through the pulse switch S16, through the wiper 827 of level 3 of step switch S25, through terminal one, through the interrupter contacts 826 of a stepping switch S5, through the step coil 825 of step switch S25, to the other side of the power supply 767. Thus, step switch S25 is on its number two terminal, and step switch S21 is on its number one terminal.

Step switch S25 remains on the number two terminal until another peewee egg comes into the peewee station, whereas switch S21 advances on every pulse produced by the pulse cam 796 because all the terminals of level 1 of step switch S21 are connected to the step coil 825 of step switch S21 through its interrupter contacts 826.

Thus, as the scale assembly continues to travel in the peewee station, the step switch S21 will be advanced step by step as the pulse cam 796 rotates, the pulses produced by the pulse cam corresponding to the pockets in the row

of the tray 664 underlying the claw assemblies 667 in the peewee station. When the wiper 827 of level 2 of step switch S21 arrives at terminal four, a circuit is established for energizing solenoid SO–1. This circuit is completed from transformer T1 through switch S17, through the wiper 827 of level 2 of step switch S25, through terminal four, through solenoid SO–1 to ground and the other side of the transformer T1. This causes the lever arm 573 of the solenoid SO–1 to be lowered to the unlatching position well ahead of the time the scale assembly arrives at the egg discharging position so that the latch arm 396 engages the unlatching lever 573 to drop the egg in the first pocket in the tray in the peewee station. As pointed out above, the circuit for energizing the solenoid SO–1 is established through the switch S17 which is operated by the solenoid duration cam 797. The cam 797 is provided with large raised portions 797*a* to provide long periods of dwell so that the solenoid SO–1 remains energized for the proper period of time.

Normally, it is desirable that the unlatching arm 573 of the solenoid come out or be lowered so that it is in position well before the latch arm 396 arrives at the desired pocket and remains in the tripping position slightly beyond the position where the egg should have been discharged. For example, we have found it desirable to have the unlatching lever 573 come down so that it is in position while the latch arm 396 is still one-half inch away and so that the lever 573 is still down when the latch arm 396 has passed one-fourth inch beyond to thereby give a total of three-quarter inch duration for the solenoid.

The timing is such that the solenoid SO–1 is energized a substantial time after the fourth pulse is produced for advancing the stepping switch S21. As the peewee egg is being dumped in the first pocket in the tray, the fifth pulse is produced by the pulse cam 796 to advance the step switch S21 to terminal five.

Now let it be assumed that another peewee egg is detected by the photoelectric relay 765. This causes step switch S25 to be advanced to terminal three by establishing a circuit from the power supply 767 through the contacts of the photoelectric relay 765, through the interrupter contacts 826 of the step switch S25, through the step coil 827 to the other side of the power supply 767. This causes step switch S25 to be advanced to terminal three. Upon the next operation of the switch S16 by the pulse cam 796, the step switch S22 is advanced from the home position to the number one terminal through a circuit completed from power supply 767, through the pulse cam switch S16, through the wiper 827 of step switch S25, through terminal three, through interrupter contacts 826 of step switch S22, through the step coil 827 of step switch S27 to the other side of the power supply 767. At the same time, the step switch S25 is advanced to the number four terminal by a circuit being completed from the power supply 767 through the switch S16, through the wiper 827 of level 3, through terminal three, through the interrupter contacts 826 of step switch S25, through the stepping coil 827 of switch S25 to the other side of the power supply 767.

Thereafter, each operation of the switch S16 will cause the step switch S22 to be advanced one step. However, the step switch S25 will not be operated because the wiper 827 is on terminal four which is not connected to anything. Step switch S22 continues to advance until it arrives at terminal three. The second bank of step switch S22 establishes a circuit for energization of the solenoid SO–2 through its terminal three, and through the pulse duration cam switch S17 in a manner similar to that hereinbefore described. Thus, the solenoid SO–2 is energized well before the scale assembly carrying the second peewee egg arrives at the second pocket. Therefore, the peewee egg is dropped in the second pocket when the arm 396 engages the unlatching lever 573.

At approximately the same time the second egg is dropped, a fourth pulse is produced which advances the step switch S22 to its terminal four. Since there is nothing connected to terminal four, it can advance no further and nothing will occur in the circuitry in FIGURE 70 until another peewee egg is detected by the photoelectric relay 765.

Now let it be assumed that another peewee egg is detected by the photoelectric relay 765 and causes movement of step switch S5 from terminal four to terminal five. The next pulse which is produced by the switch S16 causes step switch S23 to be advanced from its home position to terminal one. At the same time, step switch S25 is advanced to terminal six. Thereafter, step switch S23 advances with each pulse produced by the switch S16. When it arrives at terminal two, solenoid SO–3 is energized in a manner similar to that hereinbefore described to drop the egg in the claw assembly in the third pocket in the tray. At approximately the same time, another pulse is produced to advance the step switch S23 to terminal three, and thereafter nothing occurs until another peewee egg is detected by the photoelectric relay 765.

When the fourth egg is detected by the photoelectric relay 765, the step switch S25 is advanced to terminal 7. The next pulse produced by the switch S16 causes the step switch S24 to be advanced from its home position to the number one terminal. Terminal one of the second level of step switch S24 causes energization of solenoid SO–4 to cause the egg to be dropped into the fourth pocket in the tray. At the same time, a pulse is produced which advances the step switch S24 to terminal two and nothing else occurs until another egg is detected by the photoelectric cell.

When the fifth egg is detected, the step switch S25 is advanced to terminal nine. Terminal nine of the second level of step switch S25 is connected to the solenoid SO–5 and causes energization of the same so that the egg is dropped in the fifth pocket of the tray. During the time the fifth egg is being dropped, another pulse is produced which advances the step switch S25 to the next terminal which is terminal ten and which corresponds to the home position of step switch S25.

After the time that the fifth solenoid SO–5 is energized and at the time the unlatching lever 573 is engaged by the latch arm 396 of the scale assembly, an electrical circuit is completed by the insulated portion 573*a* of the solenoid SO–5 and the latch arm 396 for energization of relay RY9. This circuit is completed from the transformer T1 through the switch S6, through the winding of relay RY8 to ground through the contact 573*a*, through the latch arm 396 to ground. A holding circuit for relay RY8 is established through contacts 5 and 6 of the relay to ground. Contacts 5 and 6 of relay RY8 establishes a circuit for energizing relay RY9. A holding circuit for relay RY9 is established through the conveyor indexing microswitch MS–3. Energization of relay RY9 and closing of its contacts causes energization of the D.-C. clutch winding 804 from the rectifier 806 to cause advancement of the conveyor. Relay RY8 is deenergized by the opening of the switch S6 by the canceling cam. Relay RY9 is deenergized by the microswitch MS–3 when the conveyor has been advanced a sufficient amount in the same manner as the conveyors hereinbefore described.

When the tray has been advanced sufficiently so that there is a new row in which eggs can be deposited, an operation similar to that hereinbefore described takes place. It should be remembered, however, that the step switches S21–S25 do not rotate backwards to home position but continue to rotate in the same direction. Thus, when the next egg is detected by the photoelectric relay 765 and it is to be deposited in the first pocket in the first row, the step switch S21 will be advanced to terminal nine whereupon the solenoid SO–1 is energized to cause the egg to be dropped in the first pocket. The

same is true of the operation of the other step switches. They continue to rotate in the same direction.

Because of the functions to be performed by the various step switches, the terminals available on the step switches must be divisible by certain numbers, for example, the terminals on the step switch S21 must be divisible by 5; on step switch S22 they must be divisible by 4; on step switch S23 they must be divisible by 3; on step switch S24 they must be divisible by 2; and on step switch S25 they must be divisible by 1. For that reason, there is provided on step switch S21 at least ten terminals; on step switches S22 and S23, at least 12 terminals; and on stepping switches S24 and S25, ten terminals.

Because of the arrangement utilized, it is not necessary to use a switch plate assembly **585** and a splitter bar **616** as in the other weighing stations.

After all of the scale assemblies have passed through the peewee station, the latch arms **396** engage unlatching lever **771** to ensure that all the levers are unlatched. Thereafter, the scale assemblies return back to the other end of the conveyor where they go through the same sequence of steps hereinbefore described, after which they arrive at the egg pick-up station to again pick up eggs and go through a sequence of operations hereinbefore described in going through the blood, commercial, check and weighing stations.

Adjustable egg weight classifying means

In FIGURES 71–76, we have shown adjustable egg weight classifying means suitable for use in our egg handling and grading apparatus which is adjustable while the egg handling and grading apparatus is operating. With the egg weight classifying means hereinbefore described, it was necessary to stop the operation of the machine before any adjustments could be made in the positioning of the switch plate assembly **585** and the slicer or splitter bar assembly **616**.

The adjustable egg weight classifying means **900**, as shown in FIGURES 71–76, consists of an elongate horizontal bar **901** which is affixed to the lower channel **261** of the main framework. As shown in the drawings, the bar **901** is fastened to spacers **902** by cap screws **903**. The spacers **902** are secured to the channels **261** by cap screws **904**. The bar **901** is provided with slots **906** which permits adjustment longitudinally of the main conveyor so that the egg weight classifying means **900** can be properly positioned.

An arcuate member **907** is affixed to each end of the bar **901** by suitable means such as cap screws **908**. Each of the arcuate members **907** is provided with a portion **907***a* which extends outwardly away from the main conveyor assembly **101** and a portion **907***b* which extends longitudinally of the main conveyor assembly **101** and at right angles to portion **907***a*. Portion **907***a*, therefore, serves as a reinforcing web for the member **907**.

Three rollers **911**, **912** and **913** engage the portion **907***a* on each of the arcuate members **907**. Each set of three rollers is mounted upon a bracket **916** by bolts **917** which are provided with a spacer **918**. Two of the rollers, rollers **911** and **912**, are disposed on one side of the portion **907***b* and ride in a groove **914** provided therein. The grooves **914** define an arcuate path for controlling the movement of the rollers **911** and **912** in a generally vertical direction. The other roller of the three rollers, roller **913**, serves as a retaining roller and is disposed on the other side of the portion **907***b* and is so mounted that the rollers **911** and **912** are maintained in continuous engagement with the groove **914**.

A rod **921** is mounted between the brackets **916** and has its ends affixed to the brackets. The rod extends longitudinally of the conveyors at right angles to the brackets. A splitter bar assembly **922** which includes a splitter bar **923** substantially identical to the splitter bar **616** is mounted between the brackets **916** parallel to the rod **921** and extends longitudinally of the conveyor. The splitter bar **923** is provided with a knife-like forward edge **923***a* and with down slots **924** in the same manner as the splitter bar **616**. A reinforcing bar **926** is mounted between the brackets **916** and is spaced below the splitter bar **923** a predetermined distance by spacers **927**. A strap **928** is secured to the lower side of the splitter bar **923** by a screw **929** and rests upon the reinforcing bar **926**.

A switch plate assembly **931** substantially identical to the switch plate assembly **585** is affixed between the brackets **916** parallel to and below the rod **921** and parallel to and above the splitter bar **923**. This switch plate assembly **931** like switch plate assembly **585** includes a switch plate **932** in which are mounted plungers **933**. The plungers **933** are adapted to be engaged by the rollers **421** of the scale assemblies **306** to operate the switches on the switch plate **932** in the same manner that the switch plate assemblies **585** are operated. Means is provided for maintaining a predetermined spacing between the switch plate assembly **931** and the splitter bar assembly **922** and consists of spacers **936**.

Means is also provided for causing the entire assembly carried between the brackets **916** including the splitter bar assembly **922** and the switch plate assembly **931** to ride up and down on the arcuate tracks **914** provided on the arcuate members **907** and consists of a shaft **941** which is threaded into the rod **921** and extends at right angles thereto. The shaft **941** is rotatably mounted in a U-shaped support member **942**. The U-shaped support member **942** is mounted between a pair of spaced blocks **943** secured to the bar **901** by cap screws **944**. The U-shaped member **942** is swingably or pivotally mounted between the blocks **943** by a shaft **946** which is rotatably mounted in the blocks **943** and in the end portions of the U-shaped member **942**. A bevel gear **947** is affixed to the shaft **941** and is driven by a bevel gear **948** affixed to the shaft **946**. The shaft **946** is connected to a universal joint **949**. The universal joint is connected to an extension shaft **951** extending in an upwardly inclined direction toward the end of the machine. The shaft **951** is rotatably mounted in a plate **952** supported upon the framework of the machine. A knob **953** is fixed to the end of the shaft **951** and is used for manually rotating the extension shaft **951** and thereby raising and lowering the assembly carried on the brackets **916** by the threading and unthreading of the shaft **941** into and out of the rod **921**.

As can be seen from FIGURE 71, one of the adjustable egg classifying means is provided at each of the weighing stations. As can be seen from these drawings in FIGURES 71–76, each of the egg classifying means is arranged so that the switch plates **931** form a part of the upper rail or runner **956**. Separate members are provided as a part of the adjustable egg weight classifying means to form the lower runner or rail **957** to form the cam track **960** for the rollers **421** of the scale assemblies **306**.

The upper and lower runners **956** and **957** forming the cam track **960** must be made of a material that will accommodate a slight bending of the same as the splitter bar assembly **922** and the switch plate assembly **931** are raised and lowered as hereinafter described.

Operation of our egg handling and grading machine utilizing such an adjustable egg weight classifying means is substantially identical to the operation hereinbefore described. When the scale assemblies **306** approach a weighing station, the scale assemblies having eggs therein of a predetermined weight within the classification to be graded by the particular weighing station will assume a balance position therein. The tips **427** of the scale assemblies **306** carrying eggs having a weight within the weight classification of the station pass over the top of the splitter bar **923** to cause upward movement of the plungers **933** by the roller **421** as the scale assembly passes through the weighing station. Depending upon the pocket from which the egg is to be dumped, means will be actuated as hereinbefore described in the previous embodiment for discharg-

ing the egg from the scale assembly into the desired pocket so that thereafter, the tip **427** drops downwardly into the next down slot **924** and drops into engagement with the guide strap **928** and then continues until the roller **421** drops down onto the lower runner **957** of the cam track **960**.

It is apparent that while the machine is operating, the knob **953** can be rotated to rotate the shaft **951** in one direction or the other to raise or lower the splitter bar assembly **922** and the switch plate assembly **931** so that the weight of eggs classified in the particular weighing station can be changed while the machine is operating. As hereinbefore explained, it is the position of the splitter bar forward edge **923***a* that determines the weight of the eggs that will be classified in the particular weighing station.

The adjustable egg weight classifying means shown in the drawings is particularly advantageous in that it permits adjustment of the position of the splitter bar without moving behind the machine. Access to this portion of the machine is quite difficult because of the positioning of the conveyors for conveying cartons or trays into the various weighing stations of the machine. The adjustable egg weight classifying means has been shown in FIGURE 76 in conjunction with the jumbo station. As shown therein, a stub conveyor **116** is used. This conveyor is identical to that hereinbefore described except for the fact that the cam member **706** is provided with one less raised portion because of the fact that the jumbo eggs are packed only four in a row rather than five in a row as the other eggs are packed. For that reason, the spacing between the raised portions provided on the cam wheel **706** are slightly greater to accommodate the greater spacing between the pockets in the jumbo tray. The operation is identical to that hereinbefore described for the other weighing stations with the exception of the fact that solenoid assembly **560** is only provided with four solenoids rather than five as hereinbefore described.

As pointed out above, the upper and lower runners **956** and **957** forming the cam track **960** should be relatively flexible to permit the vertical adjustment of the splitter bar **923**. It also should be noted, as shown particularly in FIGURE 74, that as the splitter bar assembly **922** is raised and lowered, the splitter bar assembly assumes an angular position so that it is in general alignment with the longitudinal axis of the scale beam of the scale beam assembly. Thus, the splitter bar **923** is always in alignment with the scale beam so that the splitter bar still accurately performs its operation of actually splitting off those scale assemblies **306** which are carrying eggs of the weight classification for the weighing station in which the splitter bar is mounted.

Additional embodiment of weighing station

Another embodiment of circuitry and solenoid assembly for causing eggs to be discharged from the scale beam assemblies in proper positions is shown in FIGURES 77, 78 and 79. The solenoid assembly **976** is shown particularly in FIGURES 77 and 78 and consists of a plurality of solenoids (normally five in number), identified SO–**1**, SO–**2**, etc., which are mounted on a plate **978** secured to the lower channel member **261**. Each solenoid is provided with a plunger **979** which is pivotally connected to a link **981**. The link **981** is pivotally connected to an unlatching lever **982**. The unlatching lever **982** is pivotally mounted in an elongate slot **983** by a pin **984**. The lower extremity of the unlatching lever is provided with a rectangular cut-out **986** for a purpose hereinafter described. Means is provided for yieldably urging the unlatching lever into an out-of-the-way position and consists of a spring **987** which has one end secured to the unlatching lever **982** below the pivot point **984** by a pin **988** and the other end secured to a pin **989** provided on the plate **978**.

A pair of posts **991** extends downwardly from the plate **978** at right angles thereto and carries a longitudinally extending bar **992**. A contact member **993** is provided on the bar **992** for each of the solenoids and is adapted to be engaged by the tip **386** of the scale assembly **306** as the scale assembly passes through the weighing station as hereinafter described.

Operation of the solenoid assembly **976** can now be described in conjunction with the circuit diagram shown in FIGURE 79. Let it be assumed that it is desired to place an egg in the first pocket in a row of five pockets provided in a tray **664**. The tray-carton selector switch S8 is in the tray position. As the scale assembly **306** enters the weighing station with an egg of the weight classification for the weighing station, nothing will occur until the pointer **386** carried by the scale assembly **306** strikes the last contact **993** associated with relay RY**1**. When this occurs, the relay RY**1** will be energized. The circuit for energizing relay RY**1** is completed from transformer T**1** through the bypass contacts **1** and **2** of relay RY**5**, through contacts **1** and **2** of switch S**8**, through the winding of the relay coil for relay RY**1**, through the contact **993** mounted below the solenoid assembly SO–**1** and through the tip **386** to ground. Energization of relay RY**1** closes its contacts. Closing of contacts **2** and **3** energizes the solenoid SO–**1** to move the unlatching lever **982** into the unlatching position shown in the dot and dash lines in FIGURE 78. Closing of contacts **5** and **6** establishes a holding circuit for relay RY**1**. Closing of contacts **8** and **9** prepares a circuit for energization of relay RY**2** as hereinafter described.

It will be noted that the timing is such that the scale assembly strikes the contact **993** before it passes into the vicinity of the unlatching lever **982** for the solenoid SO–**1**. Thus, when the scale assembly advances to the position of the unlatching lever **982** for the solenoid SO–**1**, the lower extremity of the unlatching lever will be struck by the projection **396***a* provided on the latch arm **396** of the scale assembly to release the claw assembly **367** of the scale assembly to drop the egg into the first pocket in the tray. As soon as the egg is dumped or discharged, the end of the scale beam assembly carrying the point **386** will rise upwardly so that the projection **396***a* can pass through the rectangular cut-out **986** provided in the subsequent unlatching levers which may be in an energized condition. As will also be noted from FIGURE 78, the tip will also move upwardly out of position so that it will not engage subsequent contact members **993**. Thereafter, the scale assembly passes out of the weighing station. However, the solenoid SO–**1** remains energized.

Now let it be assumed that a scale assembly containing the second egg of the same classification passes into the weighing station. Nothing will occur until the pointer **386** engages the contact **993** for the second solenoid SO–**2** to energize the same to cause the unlatching lever **982** to be moved into the unlatching position so that the latch arm **396** will strike the same and drop the egg carried by the scale assembly in the second pocket of the tray. The second solenoid will be energized through the contacts **8** and **9** of the preceding relay so that it cannot be energized unless the preceding relay has been energized.

The operation of the remainder of the circuitry as the third and fourth eggs of the same classification enter the weighing station is substantially identical. When the fifth egg of the same classification enters, the relay RY**5** will be energized in the same manner. It should be pointed out that as in the preceding circuits, the operation of relay RY**5** opens the bypass circuits for the relay RY**1** through RY**5**, and these relays are deenergized the next time the canceling cam **791** operates the switch S**6**. At the time relay RY**5** is operated, relay RY**6** will be energized by the closing of contacts **8** and **9** of relay RY**5** to energize the D.-C. clutch solenoid **804** to cause advancement of the conveyor so that another row of the tray **664** will be placed under the claw assemblies **367** to receive the next eggs which come into the weighing station. The tray is halted at the proper position by the cam

706 which operates the switch MS-3 to deenergize relay RY6. After the next row of pockets in the tray has been advanced to the proper position, the same sequence of operations will take place as hereinbefore described.

The arrangement shown in FIGURES 77, 78 and 79 has certain advantages over the solenoid assemblies and circuitry hereinbefore described. It will be recalled that in the weighing stations hereinbefore described, the solenoids which were used were energized only momentarily, that is, only at the time the scale assembly was passing through the weighing station at the particular point at which the egg in the scale assembly was to be dropped. Since this was the case, means had to be provided to prevent the scale assemblies from actuating subsequent solenoids. It is for this reason that the down slots **619** in the splitter bars **616** were provided. In the embodiment shown in FIGURES 77, 78 and 79, the solenoids remain energized, after once energized until it is time to move a new row of pockets under the claw assemblies **367**. They are all deenergized by the time the new row has been moved into position.

The arrangement is also advantageous in that it permits the passage of scale assemblies of different weight classifications without operating the solenoid assemblies. This is because the portions **396***a* carried by the scale beam assemblies will either be above or below the lower extremity of the unlatching lever **982** so that the latch arms **396** will not engage the same. This is also true with respect to the engagement of the pointer **386** with the contacts **993**.

Conveyor modification

A modified conveyor construction is shown in FIGURES 80 and 81 which is particularly adapted for use with our egg handling and grading machine. In place of the belt **731** provided on each of the main conveyors **117**, a pair of belts **1001** and **1002** are provided. As can be seen particularly from FIGURE 81, the belt **1001** is substantially narrower than the belt **1002**. In addition, the belt **1001** travels in a direction which is substantially perpendicular to the longitudinal axis of the main frame of the egg handling and grading machine, whereas the belt **1002** travels at a substantial angle from a line perpendicular to the longitudinal axis of the main frame.

The belts **1001** and **1002** are arranged in this manner so that the cartons as they are packed by the machine will travel on one conveyor belt and the trays will travel on another conveyor belt as hereinafter described. The belts **1001** and **1002** can be driven in any suitable manner. For example, they can be driven by a chain **1003** driven by a sprocket **1004** connected to the shaft **688**. The chain **1003** drives a sprocket **1006** which drives a roller **1008** which drives the belt **1001**. A roller **1011** which drives the belt **1002** is connected to the roller **1008** by a universal joint **1012**.

A pair of additional conveyor belts **1016** and **1017** are provided and arranged so that the belt **1016** receives the cartons from the belt **1001** and the belt **1017** receives the trays from the belt **1002**. These belts can be driven in any suitable manner as, for example, they can be driven by an independent source of power such as provided for the belts **741** and **652** hereinbefore described.

For the stub conveyors **116**, an additional belt **1021** is provided. This belt **1021** may be driven by suitable means such as an independent drive (not shown) similar to that hereinbefore described for the belts **731** and **652**. Additional conveyor belts **1022**, **1023** and **1024** are provided and arranged at right angles to the main conveyors **117** and the stub conveyors **116** to receive the trays and cartons therefrom as shown particularly in FIGURE 80. Two additional conveyor belts (not shown) are provided below the belts **1023** and **1024** for receiving the cartons from the medium and small weighing stations. The belts **1023** and **1024** receive the cartons from the extra large and large weighing stations.

During operation of our egg handling and grading machine, the trays as they are filled by the stub conveyors **116** will be supplied to the large conveyor **1022** which underlies the conveyors **1023** and **1024** to supply the trays to the packing station (not shown). In much the same manner, the trays will be supplied to the conveyor **1022** by the main conveyors. The trays, after they are filled, are moved onto the belts **1001** and **1002**. However, since a substantially greater portion of the surface of the tray rests upon the wider belt **1002**, the belt **1002** will carry the trays and deliver them onto the belts **1017** which deliver them to the belt **1022**. The belt **1022** carries the trays to the packing station. Thus, it can be seen that the belt **1002** will carry the trays off to the left, as viewed in FIGURE 80, and deliver them to the belts **117** as shown in FIGURE 81.

When cartons are filled on the main conveyors, these cartons will be supplied to the belts **1001**. They will not come in contact with the wider belt **1002**, and for that reason they will be delivered to the belt **1016**. The belts are arranged as shown in FIGURE 80 so that the cartons containing the large and extra large eggs are delivered to the two top belts **1023** and **1024** after which they are delivered to the packing station. The cartons from the medium and small stations are delivered to two additional small belts similar to the belts **1023** and **1024** positioned below the belts **1023** and **1024** which also deliver the cartons to the packing station.

From the foregoing, it can be seen that I have provided a conveyor construction in which the trays and cartons are separated so that they can be delivered automatically to different locations in a packing station even though the trays and cartons may be filled in the same weighing stations.

It is apparent from the foregoing that we have provided a new and improved egg handling and grading apparatus which greatly facilitates the handling and grading of eggs. The handling is accomplished with a minimum of personnel. After the eggs are placed in the machine, they are handled solely by the machine and need not be touched by the operators of the machine at any time. The eggs are always kept under control; in other words, in captive positions. At no time are they rolled or are they able to touch each other. This serves to reduce breakage of eggs to a minimum. The eggs are removed from the trays while in a vertical position and are maintained in this vertical position during their passage through our egg handling and grading machine and are deposited in the cartons or trays in this same vertical position. In the candling station, the egg is rotated in such a manner that the yolk revolves at the same speed as the shell of the egg so that it is possible to determine whether or not the yolk of the egg has moved out of its normal position to thereby determine the true character of the egg. The candling operation is arranged in such a manner that the operator can view five or six eggs simultaneously and view them continuously for a substantial period of time so that the quality or character of the egg can be correctly determined.

Although our machine has been described primarily with the handling and grading of eggs, it is readily apparent that the machine can be adapted with little difficulty to the classification and sorting of other types of articles such as fruit, nuts and the like.

We claim:

1. In a machine for handling articles, means including a plurality of individual transport assemblies for transporting articles along a predetermined path, means operating in synchronism with said means for transporting articles for transferring simultaneously a plurality of articles upwardly and directly into a plurality of said individual transport assemblies of said transporting means during movement of the same, said individual transport assemblies of said means for transporting articles including means for retaining the articles after they have been inserted therein, said means for transporting articles also

including means for weighing the articles while they are being transported, and means for effecting discharge of the articles from the individual transport assemblies of the transporting means in accordance with the weight of the articles carried therein.

2. A machine as in claim 1 wherein each of said transport assemblies includes a claw assembly movable between article retaining and article releasing positions, the claw assembly being constructed in such a manner that the article can be inserted upwardly and directly into the same and then released to fall by gravity in a vertical direction from the same.

3. A machine as in claim 2 wherein each of the said transport assemblies also includes releasable latching means for yieldably retaining said claw assembly in an article retaining position.

4. A machine as in claim 2 wherein each of the said claw assemblies includes at least a pair of downwardly depending inwardly curved claw-like members, said claw-like members having a length substantially greater in a vertical direction than the width in a horizontal direction, said claw-like members also having vertical article engaging surfaces adapted to retain the article with its longitudinal axis in a vertical position.

5. In a machine for handling articles, a plurality of individual transport assemblies adapted to carry individual articles, means for advancing said transport assemblies between an article pick-up station and an article discharge station, means for delivering a plurality of articles in rows in unison to said article pick-up station in synchronism with the movement of said transport assemblies, and means for moving a row of articles simultaneously as a unit into a plurality of the transport assemblies, each of said transport assemblies including a balance beam for individually weighing the article carried in the transport assembly, said balance beam being adapted to assume a balance position in accordance with the weight of the article carried in the transport assembly.

6. A machine as in claim 5 together with means for causing the discharge of the article from each of the transport assemblies in a predetermined position in accordance with the weight of the article carried by the transport assembly.

7. In a machine for handling articles, means for transporting articles, means operating in synchronism with said means for transporting articles for transferring articles upwardly and directly into said transporting means during movement of the same, said means for transporting articles including a plurality of scale assemblies, each scale assembly carrying an article and weighing the article carried thereby while it is being transported, each of the scale assemblies having a balance beam adapted to assume a position in accordance with the weight of the article carried by the scale assembly, and means for effecting discharge of the articles from the transporting means in accordance with the weight of the articles, said means for effecting discharge of the articles including means for determining the position of the balance beam and means for effecting discharge of the article from the scale assembly in accordance with the position of the balance beam, said means for determining the position of the balance beam being adjustable during movement of the scale assemblies.

8. A machine as in claim 7 wherein said means for effecting discharge includes means for discharging eggs consecutively.

9. In a machine for handling and grading eggs, a plurality of scale assemblies adapted to carry individual eggs, each of said scale assemblies having a balance beam adapted to assume a position in accordance with the weight of the egg in the scale assembly, means for advancing said scale assemblies in a predetermined path, and switch means operated by said scale assemblies as they are advanced and effecting discharge of eggs from the scale assemblies at predetermined points along the predetermined path in accordance with the weights of the eggs in the scale assemblies.

10. A machine as in claim 16 wherein each of said scale assemblies includes a claw assembly, releaseable means adapted to latch the claw assembly into an egg retaining position and to release said claw assembly from said egg retaining position, and wherein said switch means is positioned in a predetermined vertical position so that it is only engaged by a scale assembly having an egg therein in a predetermined weight range and wherein said switch means includes means for operating said releasable means to release said egg from said claw assembly when said switch means is operated.

11. A machine as in claim 9 wherein means is provided permitting vertical adjustment of the switch means during advancement of the scale assemblies.

12. In a machine for handling and grading eggs, a plurality of scale assemblies adapted to carry individual eggs, each of said scale assemblies consisting of a balance beam, a claw assembly for carrying the egg mounted on one end of said beam, a balance weight mounted on the beam, said balance beam assuming a position in accordance with the weight of the egg in the claw assembly, means for advancing said scale assemblies in a predetermined path, latching means mounted on each of the claw assemblies adapted to retain the claw assemblies in either an egg retaining position or an egg releasing position, switch means operated by said scale assemblies as they are advanced, and solenoid means operated by said switch means and adapted to unlatch said latching means on the claw assemblies to permit movement of the claw assemblies to an egg release position, said switch means and said solenoid means being so positioned that they effect discharge of eggs from the scale assemblies at predetermined points along the predetermined path in accordance with the weights of the eggs in the scale assemblies.

13. A machine as in claim 12 together with a pendulous weight mounted on said beam for adjustment of the range of said scale assembly.

14. A machine as in claim 12 wherein said solenoid means is energized only temporarily.

15. A machine as in claim 12 together with means for adjusting the weight of eggs discharged at predetermined points during movement of the scale assemblies.

16. In a machine for handling and grading eggs, a plurality of scale assemblies adapted to carry individual eggs, each of said scale assemblies having a balance beam adapted to assume a position in accordance with the weight of the egg in the scale assembly, a roller mounted on one end of said balance beam, means for advancing said scale assemblies in a predetermined path, a cam track for guiding the movement of said rollers on said scale assemblies as the scale assemblies are advanced, a plurality of weighing stations disposed longitudinally of the predetermined path, a splitter bar disposed in each of the weighing stations, a switch assembly in each weighing station associated with the splitter bar, a trip provided on the end of each of said scale assemblies and adapted to engage the splitter bar so that the tip on the scale assembly travels either above or below the splitter bar as determined by the weight of the egg in the scale assembly, said switch means being adapted to be operated by said roller as said tip passes on one side of said splitter bar, and solenoid operated means actuated by said switch means for releasing eggs from said scale assemblies during movement thereof to deposit eggs at predetermined points along the predetermined path in accordance with the weight of the eggs in the scale assemblies.

17. A machine as in claim 16 together with means for shifting the position of said splitter bar and said switch means during movement of the scale assemblies to thereby select the weight of egg discharged in the weighing station.

18. A machine as in claim 16 wherein said splitter bar includes means for permitting the roller to be moved out of engagement with the switch means as soon as the egg has been released from the associated scale assembly.

19. A machine as in claim 16 wherein said switch means includes a plurality of switches and wherein said splitter bar is provided with a plurality of down slots, said down slots being positioned so that as soon as an egg is released from the scale assembly, the tip of the scale assembly will pass into a down slot to move the roller of the scale assembly out of engagement with the switch means to thereby prevent operation of the subsequent switches in the switch means.

20. In a machine for handling and grading eggs, a plurality of scale assemblies adapted to carry individual eggs, each of said scale assemblies having a balance beam pivoted about a horizontal axis and adapted to assume a position in accordance with the weight of the egg carried by the scale assembly, means for advancing said scale assemblies in a predetermined path through a plurality of weighing stations disposed longitudinally of the predetermined path, and switch means mounted in each of the weighing stations and positioned at a predetermined vertical position in said weighing staton in accordance with the weight of the egg to be discharged in the weighing station, said switch means in each weighing station being adapted to engage scale assemblies carrying eggs having such predetermined weights to cause a discharge of such eggs in the weighing station.

21. A machine as in claim 20 wherein each of said scale assemblies includes unlatching means and wherein said switch means includes solenoid operated means for engaging the latching means.

22. A machine as in claim 21 wherein said solenoid operated means includes a plurality of solenoids disposed longitudinally of the predetermined path and adapted to cause the discharge of eggs at predetermined points along the predetermined path.

23. A machine as in claim 21 wherein said switch means includes means for causing the discharge of a plurality of eggs in any one weighing station in sequence in a row extending longitudinally of the conveyor and in a direction counter-currently of the direction of advance of the scale assemblies.

24. A machine as in claim 22 wherein said solenoids are energized in sequence and remain energized until a row of eggs have been discharged in a weighing station.

25. A machine as in claim 22 wherein said solenoids are intermittently energized in sequence.

26. In a machine for handling and grading eggs, a plurality of scale assemblies adapted to carry individual eggs, each of the scale assemblies having a balance beam, egg retaining means mounted on one end of the beam, a balance weight mounted on the other end of the beam, said balance beam being adapted to assume a position in accordance with the weight of the egg in the egg retaining means, releasable means mounted on the egg retaining means for latching the egg retaining means into an egg retaining position and permitting said egg retaining means to move to an egg release position, means for advancing said scale assemblies in a predetermined path, switch means operated by said scale assemblies as they are advanced, and solenoid operated means operated by said switch means, said switch means being disposed to be engaged by scale assemblies in accordance with the weight of the eggs in the scale assemblies whereby the solenoid operated means is operated to unlatch the egg retaining means to permit eggs of the predetermined weight to be discharged at predetermined points along the predetermined path.

27. A machine as in claim 26 wherein said switch means includes a plurality of switches and wherein said solenoid operated means includes a plurality of solenoids.

28. In a machine for handling articles, a plurality of article holding devices, means for delivering a plurality of articles aligned in rows simultaneously to a plurality of said article holding devices so that the articles are retained by the article holding devices, means for moving the article holding devices after they have received articles and means for causing discharge of articles from the article holding devices in accordance with the weight of the articles in the article holding devices after the article holding devices have been moved.

29. A machine as in claim 28 wherein each of the article holding devices includes a balance beam for individually weighing the article carried in the article holding device, said balance beam being adapted to assume a balanced position in accordance with the weight of the article carried in the article holding device.

30. In a machine for handling articles, means for transporting articles along a predetermined path, means operating in synchronism with said means for transporting articles into said transporting means during movement of the same, said means for transporting articles including means for weighing the articles while they are being transported, and means for effecting discharge of the articles from the transporting means in accordance with the weight of the articles, said means for transporting articles including a plurality of transport assemblies adapted to carry individual articles, each of said transport assemblies including a balance beam for weighing the articles while they are being transported along the predetermined path, said balance beams assuming different positions in accordance with the weights of the articles carried by the transport assemblies, said means for effecting discharge including means for engaging said balance beams in balance positions to cause the discharge of articles therefrom at longitudinally spaced points along the perdetermined path, each of said transport assemblies including a claw assembly movable between article retaining and article releasing positions, the claw assemblies being constructed in such a manner that the articles can be inserted upwardly into the same and then released to fall by gravity from the same, each of the claw assemblies including a plurality of downwardly depending inwardly curved claws arranged in a substantially circular manner, each of said claw assemblies being provided with four claws arranged in two pairs so that there is a substantially wider spacing between the pairs than the spacing between the claws of each pair to thereby provide wide and narrow openings between the claws.

31. A machine as in claim 30 together with means for rotating the claw assemblies of the transport assemblies to a predetermined position before an article is transferred into the same.

32. In a machine for handling articles, a plurality of individual transport assemblies adapted to carry individual articles, means for advancing the transport assemblies between an article pick-up station and an article discharge station, means for delivering a plurality of articles in rows to said article pick-up station in synchronism with the movement of said transport assemblies, means for moving a row of the articles upwardly and simultaneously into a plurality of the transport assemblies, each of the transport assemblies including a balance beam for individually weighing the article carried in the transport assemblies, said balance beam being adapted to assume a balance position in accordance with the weight of the article carried in the transport assembly, and means for causing discharge of the article from each of the transport assemblies in a predetermined position in accordance with the weight of the article carried by the transport assembly so that the article can drop by force of gravity.

33. A machine as in claim 32 wherein each of said transport assemblies includes a claw assembly, releasable means adapted to latch the claw assembly into an article retaining position, and means positioned in a predetermined vertical position so that it is only engaged by the releasable means of a transport assembly having an article therein in a predetermined weight range to cause the re-

lease of the article from the claw assembly by actuation of said releasable means.

34. In a machine for handling articles, a plurality of transport assemblies adapted to carry individual articles, means for advancing the transport assemblies between an article pick-up station and an article-discharge station, means for delivering articles to the transport assemblies, each of the transport assemblies having a balance beam adapted to assume a balance position in accordance with the weight of the article carried in the transport assembly, bulk weight adjusting means carried by the balance beam, fine weight adjusting means carried by the balance beam, and means for causing discharge of the article from each of the transport assemblies in accordance with the weight of the article carried by the transport assembly.

35. In apparatus of the character described, a balance beam, a claw assembly, means rotatably mounting the claw assembly on the balance beam, and means for moving the claw assembly between an egg retaining position and an egg releasing portion and second means for moving the balance beam and claw assembly along a predetermined path.

36. Apparatus as in claim 35 wherein the claw assembly consists of at least a pair of downwardly depending, inwardly facing curved claw-like members, said claw-like members having vertically disposed surfaces adapted to engage the egg to hold the egg with its longitudinal axis in a vertical direction.

37. In a machine for handling articles, means for transporting the articles along a predetermined path, means operating in synchronism with said means for transporting articles into said transporting means during movement of the same, said means for transporting articles including means for weighing the articles while they are being transported, and means for effecting discharge of the articles from the transporting means in accordance with the weight of the articles, said means for transporting articles including a plurality of transport assemblies adapted to carry individual articles, each of said transport assemblies including a balance beam for weighing the article while it is being transported along the predetermined path, said balance beams assuming different positions in accordance with the weights of the articles carried by the transport assemblies, said means for effecting discharge including means for engaging said balance beams in balance positions to cause discharge of articles therefrom at longitudinally spaced points along the predetermined path, each of said transport assemblies including a claw assembly movable between article retaining and article-releasing positions, the claw assemblies being constructed in such a manner that articles can be inserted upwardly into the same and then released to fall by gravity from the same, each of the claw assemblies including a plurality of downwardly depending inwardly curved claw-like members, said claw-like members having a length in a vertical direction substantially greater than their width in a horizontal direction and being formed so that they provide egg engaging surfaces which extend in a vertical direction and which are adapted to retain the eggs with their longer axes in a vertical direction.

38. In a machine for handling and grading eggs, a plurality of scale assemblies adapted to carry individual eggs, each of said scale assemblies having a balance beam adapted to assume a position in accordance with the weight of the egg in the scale assembly, a roller mounted on one end of said balance beam, means for advancing said scale assemblies in a predetermined path, a cam track for guiding the movement of said rollers on said scale assemblies as the scale assemblies are advanced, a plurality of weighing stations disposed longitudinally of the predetermined path, a splitter bar for each of the weighing stations, each of said scale assemblies having a tip adapted to engage the splitter bars, means for mounting said splitter bar in each of said stations so that the tip of the scale assembly travels either above or below the splitter bar as determined by the weight of the egg in the scale assembly as it passes through the weighing station and means for causing the egg carried by the scale assembly to be discharged from the scale assembly when the tip of the scale assembly travels above the splitter bar in that weighing station.

39. A machine as in claim 38 together with switch means operated by said scale assembly when the tip of the scale assembly passes above the splitter bar.

40. A machine as in claim 38 wherein said cam track is formed by upper and lower spaced members.

41. In a machine for handling and grading eggs, a plurality of scale assemblies adapted to carry individual eggs, each of said scale assemblies having a balance beam pivoted about a horizontal axis and adapted to assume a position in accordance with the weight of the egg carried by the scale assembly, means for advancing said scale assemblies in a predetermined path through a plurality of weighing stations disposed longitudinally of the predetermined path, and means mounted in each of said weighing stations and positioned at a predetermined vertical position in said weighing station in accordance with the weight of the egg to be discharged in the weighing station, said means in each weighing station being adapted to engage the scale assemblies carrying eggs having such predetermined weights to cause a discharge of such eggs in the weighing station.

References Cited by the Examiner

UNITED STATES PATENTS

1,549,159	8/1925	Suhm	177—147
2,568,255	9/1951	Scheiser et al.	209—121
2,663,422	12/1953	Parker	209—121
2,792,253	5/1957	Bliss.	
2,835,386	5/1958	Manzolf	209—121
2,994,430	8/1961	Reck et al.	209—121
3,009,572	11/1961	Seaborn	209—121
3,093,245	6/1963	Worcester	209—121

M. HENSON WOOD, JR., *Primary Examiner.*

CLAUDE A. LEROY, ROBERT B. REEVES, *Examiners.*