J. R. ROSE.

PROCESS OF AND APPARATUS FOR PRODUCING CARBON AND GASEOUS FUEL.

APPLICATION FILED NOV. 8, 1918.

1,352,085. Patented Sept. 7, 1920.

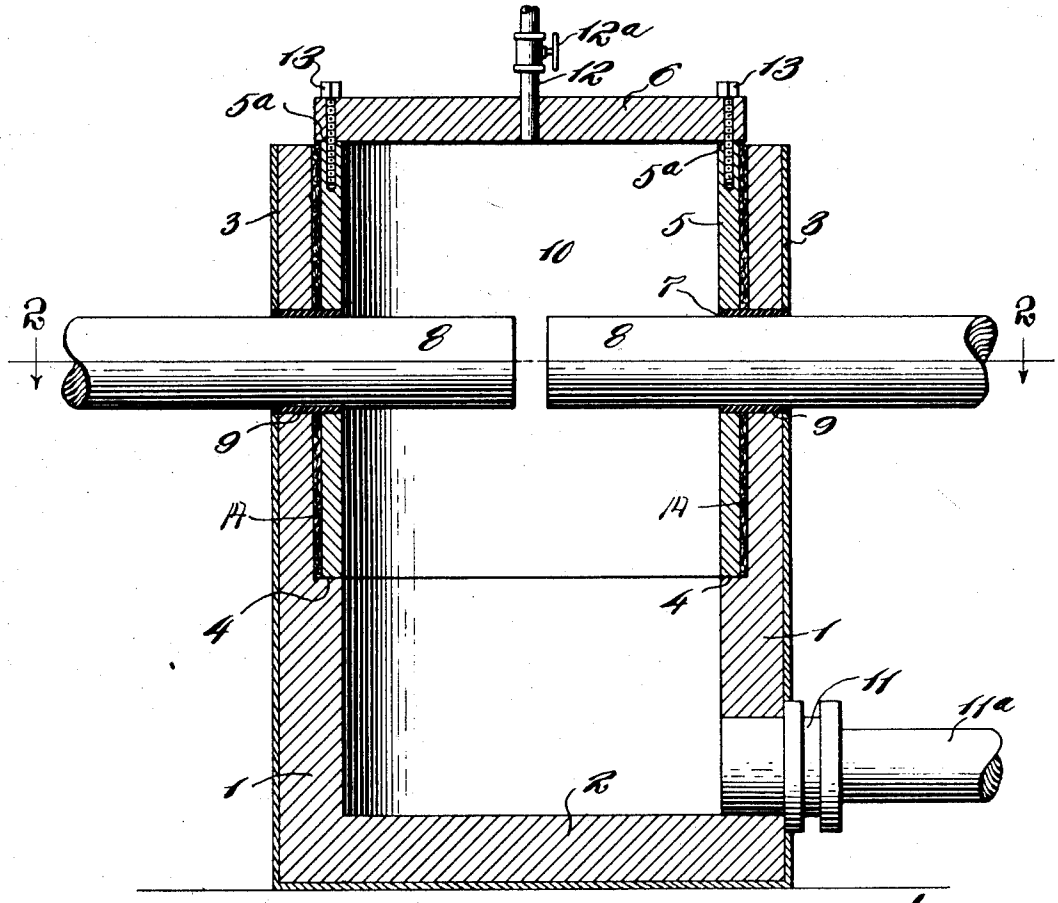

Fig. 1

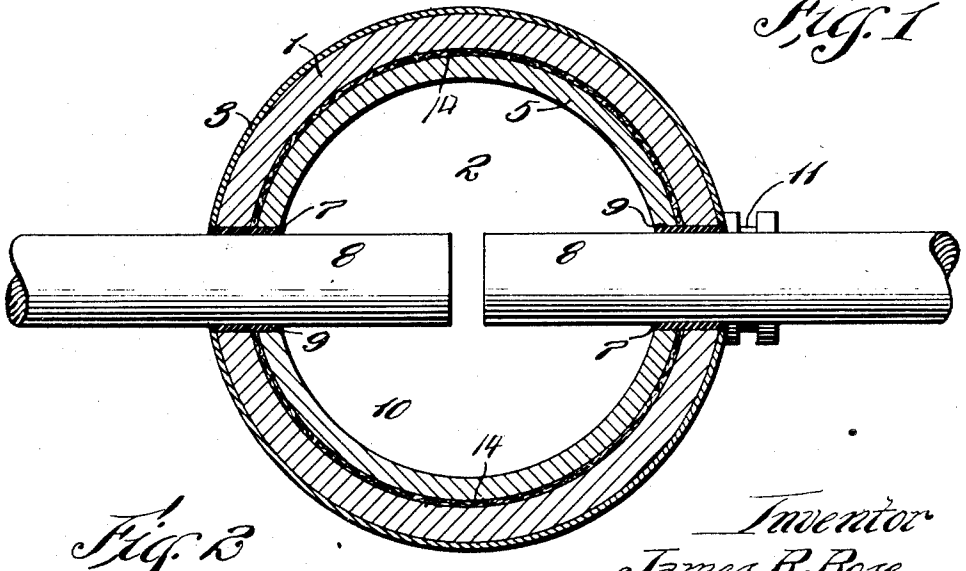

Fig. 2

Inventor
James R. Rose
By Hull, Smith, Brock & West.
Attys.

UNITED STATES PATENT OFFICE.

JAMES R. ROSE, OF EDGEWORTH, PENNSYLVANIA.

PROCESS OF AND APPARATUS FOR PRODUCING CARBON AND GASEOUS FUEL.

1,352,085. Specification of Letters Patent. Patented Sept. 7, 1920.

Continuation of application Serial No. 230,772, filed April 25, 1918. This application filed November 8, 1918. Serial No. 261,588.

To all whom it may concern:

Be it known that I, JAMES R. ROSE, a citizen of the United States, residing at Edgeworth, in the county of Allegheny and State of Pennsylvania, have invented a certain new and useful Improvement in Processes of and Apparatus for Producing Carbon and Gaseous Fuel, of which the following is a full, clear, and exact description, reference being had to the accompanying drawings.

This invention relates to a process of and an apparatus for producing carbon and a gaseous fuel this application being in some respects a continuation of my application No. 230,772, filed April 25, 1918. The invention has for its general object the production of such carbon and gaseous fuel in a particularly efficient and economical manner.

When practised in accordance with certain conditions to be set forth hereinafter, the process results in the production of finely divided carbon, which is in a form particularly adaptable for use in various arts, and a gaseous fuel which is especially adapted for the cutting and welding art, said gas being known to the trade under the name of "carbo-hydrogen" and containing approximately 85 per cent. of hydrogen and 15 per cent. of hydrocarbons of high heating value, such as gases of the CH_4 and C_6H_6 series. By variations in the treatment, to be explained hereinafter, different proportions and qualities of carbon may be produced, together with different proportions of gaseous fuel.

In the drawing forming part hereof, Figure 1 represents a central vertical sectional view through an apparatus (shown as an electrical furnace) for realizing the process of my invention; and Fig. 2 a sectional view corresponding to the line 2—2 of Fig. 1.

Describing by reference characters the various parts illustrated herein, 1 represents the cylindrical wall of a furnace or generator, said wall being of refractory material, capable of withstanding the temperature due to the employment of an electric arc. 2 denotes the bottom wall of the furnace, also made of such refractory material, the walls 1 and 2 being inclosed by a shell 3, preferably of sheet steel. The lower portion of the wall 1 is reduced in diameter to provide thereabove an annular recess having at its bottom a horizontal annular ledge 4. In this recess and supported by this ledge is a cylindrical lining 5, preferably of cast iron or steel, said lining removably fitting within the annular recess, the inner diameter of said lining being substantially equal to the inner diameter of the lower portion of the said wall 1. The lining 5 projects slightly above the top of the wall 1 and its upper face 5^a is ground to provide a ground joint fit with the coöperating ground surface on the bottom of a cover 6, preferably of heavy cast iron.

About midway of its height, the lining 5 is provided with diametrically opposed circular openings 7 adapted to register with openings of corresponding size and location in the wall 1, and casing 3, the aforesaid openings being provided for the reception of the carbon electrodes 8 of an electric arc, the said electrodes being insulated from the wall 1 and lining 5 by means of bushings 9 surrounding the carbons and forming a close fit with the same and the interior of the openings in said wall, lining, and casing.

From the bottom of the furnace chamber 10, and preferably immediately above the bottom wall 2, there extends a gas outlet connection 11 from which a pipe 11_a may extend to a carbon separator of any standard construction and thence to any suitable receptacle for the gaseous fuel. The cover 6 is provided with a gas inlet pipe 12 extending downwardly therethrough and preferably located centrally thereof, said pipe having a valve 12_a for controlling the supply of gas to the furnace or generator. The cover 6 will be removably attached to the furnace top, as by means of lag screws 13 extending through the cover and threaded into the lining 5.

With the parts constructed and arranged as described, a hydrocarbon fluid, preferably methane or natural gas, is supplied through the inlet pipe 12 to the chamber 10 surrounding the electrodes 8, said electrodes being supplied with an electric current so as to produce an arc between the adjacent ends thereof, the chamber 10 being commensurate with the size of the arc. In its passage through the chamber 10, heated by the arc formed between the electrodes, the hydrocarbon will be dissociated, with the production of hydrogen and hydrocarbons of high

heating value, as pointed out hereinbefore, and with the product of a certain proportion of finely divided carbon.

The effective temperature to which the hydrocarbon is subjected in its passage through the chamber 10 may, and preferably will, be controlled by the rate of supply of such hydrocarbon. In general, the higher the temperature to which the hydrocarbon is raised in its passage through the chamber 10 the greater will be the proportion of the carbon deposited and the lower the proportion of the gaseous fuel produced. For instance, by raising the temperature of the hydrocarbon to about 2000° F., a gas containing approximately 85 per cent. hydrogen and 15 per cent. of the other hydrocarbons of high heating value, such as referred to hereinbefore, will be produced, together with a certain proportion of free, finely divided carbon. At a temperature of about 1000° F., a comparatively small proportion of pure, finely divided, high grade non-graphitic black carbon will be produced. When the temperature of the hydrocarbon in the chamber 10 approximates 3000° F., practically all of the carbon constituent is precipitated and the resultant gas is substantially pure hydrogen; where the gas in the chamber 10 is raised to a temperature of about 1800° F., the carbon precipitated will be mainly graphitic carbon. At temperatures below 1800° F. the carbon will be precipitated mainly in the form of lamp black.

By making the lining 5 of non-oxidizable material, such as cast iron, steel, or a non-oxidizable alloy of metals, no chemical effect will be produced upon the carbon in the chamber 10 by contact with such lining and the carbon will be free from impurities and substances which might detrimentally affect the same.

Between the outer wall of the lining 5 and the coöperating inner surface of the wall 1, there is interposed a ring or envelop 14 of gas-tight, high-resisting material, such as asbestos. By the employment of the ground joint between the top 5^a of the lining 5 and the bottom of the cover 6, a gas tight joint is provided without the necessity for employing asbestos or other heat resisting compact.

By the construction herein described, the lining ring 5 may be conveniently applied to the wall 1 and may be conveniently removed for purposes of renewal and inspection, after having first withdrawn the carbon electrodes 8.

For convenience of description, the wall 1 and the lining 5 will be referred to hereinafter as "annular", it not being intended thereby to limit my invention to a wall and lining which are strictly circular in section.

Having thus described my invention, what I claim is:—

1. The process of producing carbon which comprises introducing an aeriform hydrocarbon fluid into a generator heated by an electric arc thereby to raise the temperature of such fluid to a point sufficient to dissociate the fluid into solid carbon and a gas containing a preponderating amount of hydrogen.

2. The process of producing carbon and a fixed gas for fuel purposes which comprises introducing methane into a generator heated by an electric arc and thereby raising the temperature of the gas to a point sufficient to dissociate the same into solid carbon and a gas of high heating value containing a preponderating proportion of hydrogen.

3. The process of producing carbon and a gas of low luminosity and high heating value which comprises introducing natural gas into a generator heated by an electric arc and thereby raising the temperature of the gas to a point sufficient to dissociate the same into solid carbon and a gas of high heating value containing a preponderating proportion of hydrogen.

4. The process of producing carbon which comprises introducing an aeriform hydrocarbon fluid into a furnace or generator heated by an electric arc, and regulating the flow of the said fluid in accordance with the temperature to which it is desired to heat such fluid, thereby to dissociate such fluid into solid carbon and a gas containing a preponderating amount of hydrogen.

5. The process of producing carbon which comprises introducing an aeriform hydrocarbon fluid into a generator or furnace heated by an electric arc and having an inner wall of refractory material incapable of combining with carbon, thereby to dissociate the said fluid into substantially pure solid carbon and a gas containing a preponderating amount of hydrogen.

6. The process of producing carbon which comprises introducing a regulable supply of a hydrocarbon fluid into a generator or furnace heated by an electric arc and having an inner wall of non-oxidizable material, thereby to dissociate the said fluid into substantially pure solid carbon and a gas containing a preponderating amount of hydrogen.

7. The process of converting a hydrocarbon vapor into pure carbon and a fixed gas rich in hydrogen and of comparatively low luminosity which contains the step of introducing such hydrocarbon vapor into a furnace or generator heated by an electric arc thereby to dissociate such hydrocarbon and produce a gaseous fuel having a relatively high hydrogen content and a relatively low carbon content.

8. The process of converting a hydrocar-

bon vapor into pure carbon and a fixed gas rich in hydrogen and of compartively low luminosity which contains the step of introducing such hydrocarbon vapor into a generator heated by an electric arc and thereby heating such fluid to a temperature of from approximately 1000° F. to 3000° F.

9. A furnace or generator comprising a wall of refractory material, said wall having a lining of material chemically resistant to the action of carbon, electrodes projecting within the space inclosed by said lining, an envelop of gas-tight refractory material inclosed between the outer wall of the lining and the first mentioned wall, connections for supplying hydrocarbon fluid to the space within said lining, and an outlet connection leading from said furnace or generator.

10. The combination, with a furnace or generator having a chamber the inner wall whereof is chemically resistant to the action of carbon, of electrodes projecting within said chamber, connections for supplying hydrocarbon fluid to said chamber, and an outlet connection leading from said furnace or generator.

11. A furnace or generator of the character described comprising an annular wall and a closure for each end of said wall, the said wall having an annular recess extending from one end toward the other end thereof, a lining of carbon-resistant material in said recess, an envelop of refractory material surrounding said lining, means for forming an electric arc within said lining, connections for supplying hydrocarbon fluid to the chamber surrounded by said lining, and an outlet connection extending from said furnace or generator.

12. A furnace or generator of the character described comprising an annular wall and a closure for each end of said wall, the said wall having an annular recess extending from one end toward the other end thereof, a lining of carbon-resistant material in said recess, means for forming an electric arc within said lining, connections for supplying hydrocarbon fluid to the chamber surrounded by said lining, and an outlet connection extending from said furnace or generator.

13. A furnace or generator of the character described, comprising an annular wall of refractory material having a bottom closure and having an annular recess extending from the top thereof, a metallic carbon resistant lining in said recess, an envelop of refractory material surrounding said lining in said recess, said lining extending beyond the upper end of said wall and having at its upper end a ground face extending therearound, a cover having a ground surface cooperating with said ground face, means for securing said cover to said wall, electrodes projecting through said wall and lining, insulating refractory material surrounding said electrodes in said wall and lining, a fluid supply connection extending through said cover, and an outlet connection extending through said wall above and adjacent to the bottom thereof.

14. A furnace or generator of the character described, comprising an annular wall of refractory material having an end closure and having an annular recess extending from the opposite end thereof, a metallic carbon resistant lining in said recess, said lining extending beyond the end of said wall and having at its upper end a ground face extending therearound, a cover having a ground surface coöperating with said ground face, means for securing said cover to said wall, means for forming an electric arc within the chamber surrounded by said lining, a fluid supply connection communicating with said chamber, and an outlet connection from said furnace or generator.

15. A furnace or generator of the character described comprising an annular wall of refractory material, a lining of carbon resistant material removably fitted within said wall, an envelop of refractory material interposed between the outer surface of said lining and the coöperating inner surface of said wall, a closure for the end of said wall into which the lining is inserted and forming a gas tight joint with the said lining, electrodes removably supported in said wall and lining and projecting into the space inclosed by the latter, means for supplying fluid to the space inclosed by said lining, and an outlet connection extending from said furnace or generator.

16. A furnace or generator comprising an annular wall of refractory material having a closure at one end thereof, a lining of carbon resistant material inserted into the end of said wall which is opposite said closure, said lining extending beyond said wall and having a ground face extending there, around, a cover having a ground surface cooperating with said ground face, said cover and said lining being removably supported by said furnace or generator, means for supplying fluid to the interior of said lining, means for forming an electric arc within said lining, and an outlet connection extending from the furnace or generator.

In testimony whereof, I hereunto affix my signature.

JAMES R. ROSE.