June 23, 1959 R. S. KRIEGER ET AL 2,891,636

ELEVATOR LEVELLING MECHANISM

Filed March 14, 1955 3 Sheets-Sheet 1

Fig. 1.

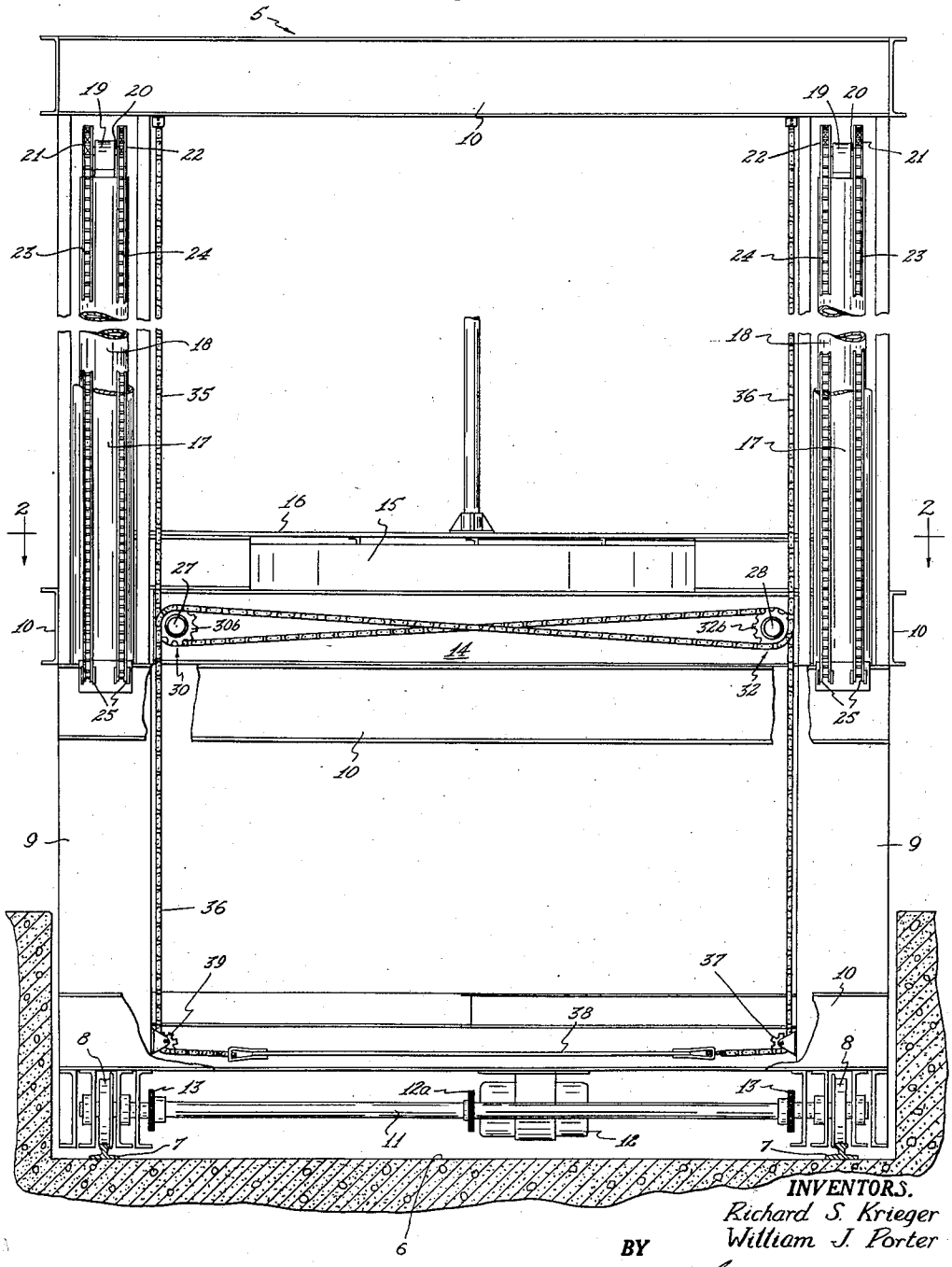

INVENTORS.
Richard S. Krieger
William J. Porter

BY Cruikshank & Wells
Atty.

June 23, 1959 R. S. KRIEGER ET AL 2,891,636

ELEVATOR LEVELLING MECHANISM

Filed March 14, 1955 3 Sheets-Sheet 2

Fig. 2.

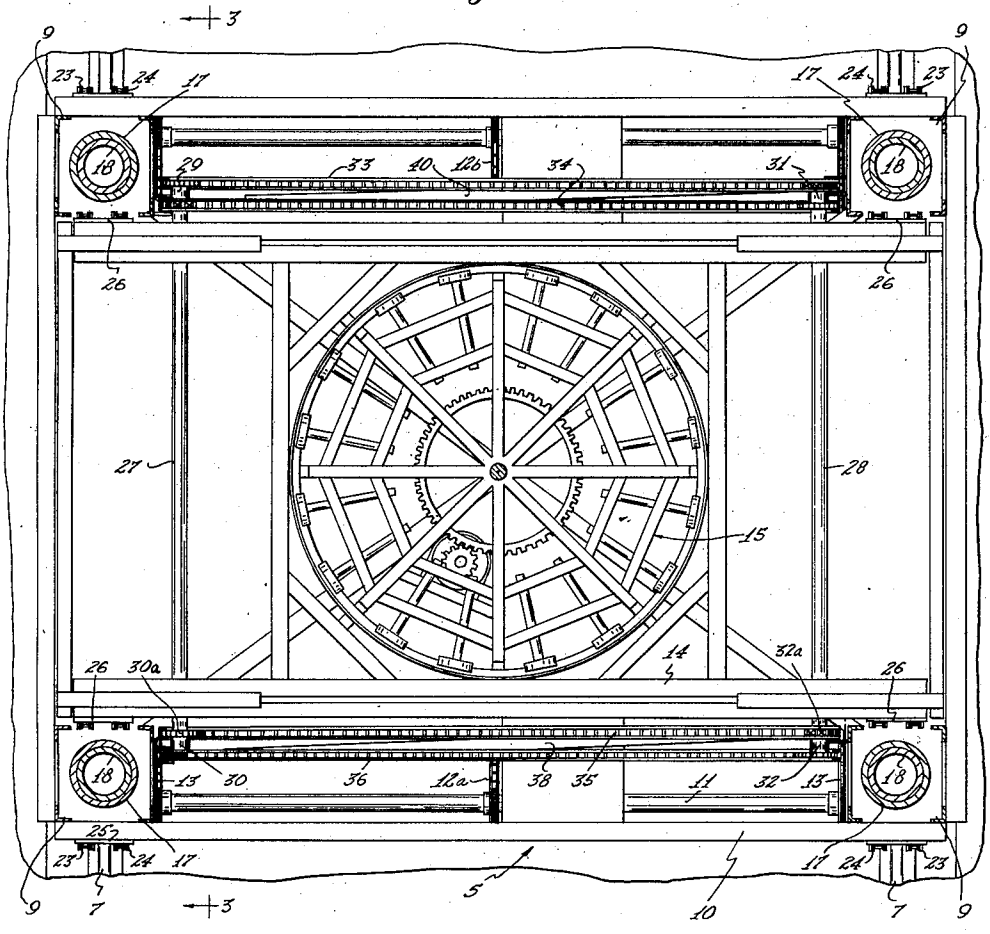

INVENTORS.
Richard S. Krieger
William J. Porter

BY Greenwell

Atty.

June 23, 1959 R. S. KRIEGER ET AL 2,891,636

ELEVATOR LEVELLING MECHANISM

Filed March 14, 1955 3 Sheets-Sheet 3

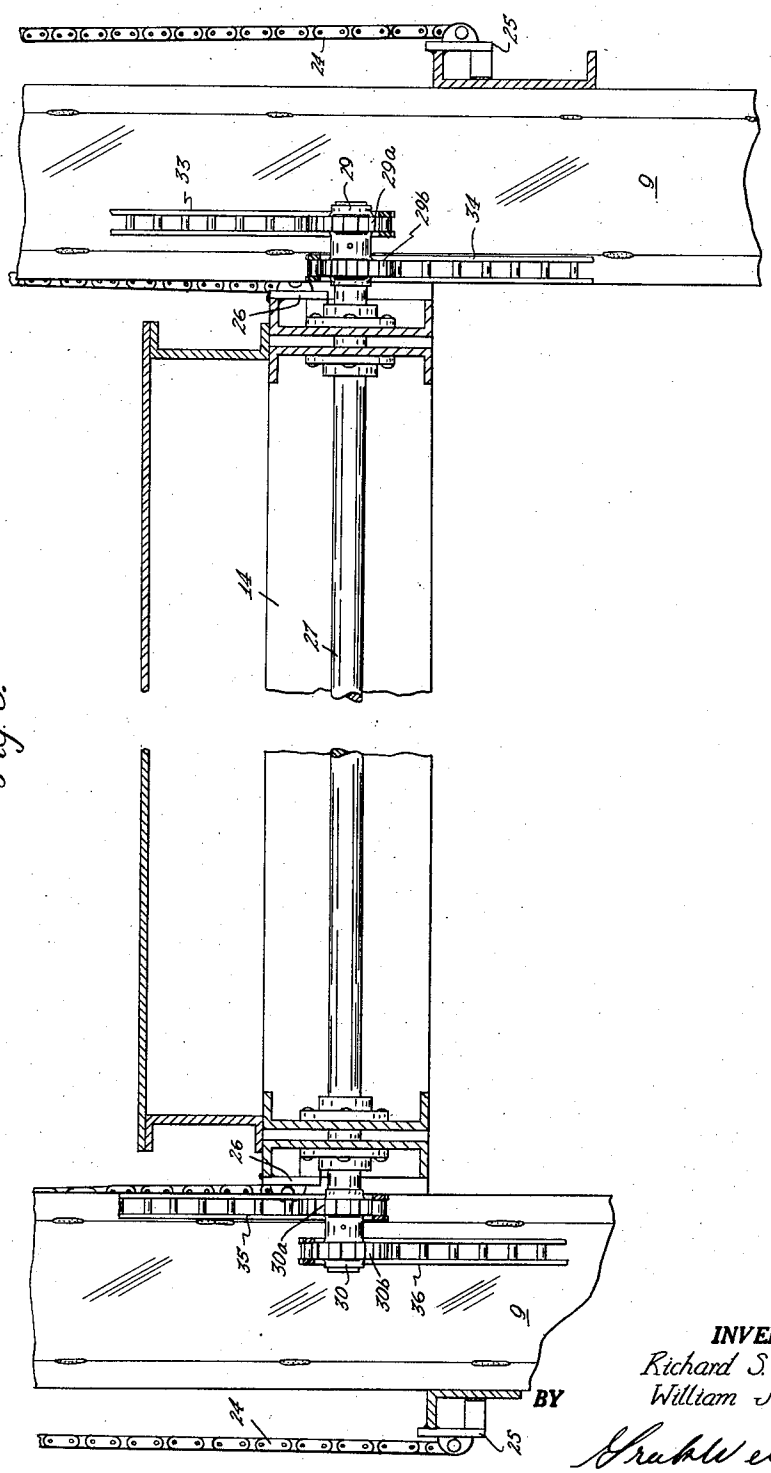

Fig. 3.

INVENTORS.
Richard S. Krieger
William J. Porter

BY Grable & Ellis
Atty.

United States Patent Office 2,891,636 Patented June 23, 1959

2,891,636

ELEVATOR LEVELLING MECHANISM

Richard S. Krieger and William J. Porter, Spokane, Wash., assignors to Parkmaster Systems Inc., Spokane, Wash., a corporation of Washington

Application March 14, 1955, Serial No. 493,894

1 Claim. (Cl. 187—17)

The present invention relates to improvements in an elevator levelling mechanism. The invention is particularly applicable to elevators which are used for elevating automobiles for parking them in stalls at different levels in a structure. In these parking devices the automobiles are placed on a turntable which is located at the floor of an elevator carriage and particularly in the case where there is space for more than one automobile on the turntable, uneven loading of the elevator carriage is commonplace. At times the carriage will be raising and lowering one automobile and at other times may have two automobiles of different weights thereon. It is the purpose of the present invention to provide an elevator of the character above described with chains and sprockets suitably connected to the elevator frame and the carriage, together with shafts connecting certain of the sprockets so that in the raising and lowering of the elevator carriage all four corners of the carriage must remain at the same level regardless of the loading.

The nature and advantages of the invention will appear more fully from the following description and the accompanying drawings wherein a preferred form of the invention is illustrated. It should be understood however, that the drawings and description are illustrative only and are not intended to limit the invention except insofar as it is limited by the claim.

In the drawings:

Figure 1 is a view in side elevation of an elevator frame and carriage embodying my invention;

Figure 2 is a plan sectional view taken on the line 2—2 of Figure 1 with the platform and turntable top of the elevator carriage removed; and

Figure 3 is an enlarged sectional view taken on the line 3—3 of Figure 2.

Referring now to Figure 1 of the drawings, the invention is shown in connection with an elevator wherein the numeral 5 indicates an elevator framework which is mounted in an elevator pit 6 on rails 7 by wheels 8. The elevator framework 5 has corner uprights 9 at the four corners and cross frame members 10 are provided at intervals throughout the height of the framework 5. The wheels 8 are mounted on shafts 11 which are adapted to be driven by a motor 12 so as to move the elevator framework 9 lengthwise of the well 6. The shafts 11 are connected together by drive chains 13 and the motor 12 is connected to the shafts 11 by drive chains 12*a* and 12*b*.

Within the elevator framework 5 an elevator carriage 14 is mounted for up and down movement. This carriage 14 has a turntable 15 on it which has a platform 16 for supporting the automobiles. The carriage 14 is raised and lowered within the framework 5 by four hydraulic jacks 17, one at each corner of the framework 5. These jacks have their pistons 18 provided at the top with supporting blocks 19 for shafts 20 that carry sprocket wheels 21 and 22. The sprocket wheels have chains 23 and 24 trained over them, the sprocket chains being anchored at one end to the framework 5 as indicated at 25. The other ends of the sprocket chains 23 and 24 are anchored

to plates 26 on the elevator carriage 14. With this mechanism the carriage 14 can be raised and lowered a distance twice the amount of travel of the jack pistons 18. The carriage 14 has two cross shafts 27 and 28 journalled therein. The shaft 27 has a double sprocket wheel unit 29 at one end and a similar double sprocket wheel unit 30 at the other end. The shaft 28 has a double sprocket wheel unit 31 and a similar sprocket wheel unit 32 at the other end. The sprocket wheel units are all fixed to their respective shafts and the sprocket wheels and each of the units 29, 30, 31 and 32 are of identical size. Four sprocket chains 33, 34, 35 and 36 (see Figure 2) are employed. As illustrated best by Figures 1 and 3, the sprocket chain 35 is fixed to the top member 10 of the framework 5 and extends down underneath a sprocket wheel 30*a* of the unit 30, then across to sprocket wheel 32*a* of the unit 32 and then down around a lower sprocket 37 which is mounted at the lower right hand corner of the framework 5. The chain 35 is anchored to a cross bar 38. The sprocket chain 36 extends from the bar 38 around a sprocket 39 at the lower left hand corner of the framework 5 as seen in Figure 1, upwardly over sprocket wheel 30*b* of the unit 30, then beneath sprocket wheel 32*b* of the unit 32 and then upwardly to the top member 10 of the framework 5 where it is anchored. The chains 33 and 34 are arranged in a like manner around the sprocket wheels 29*a* and 29*b* of the unit 29 and the sprocket wheels 31*a* and 31*b* of the unit 31. The sprocket chains 33 and 34 are secured to the top of the framework 5 in the same manner as the chains 35 and 36. They are likewise connected at the bottom by a cross bar 40 after being passed around sprocket wheels (not shown) at the bottom of the framework 5, which sprocket wheels are identical to the sprocket wheels 37 and 39.

With the construction as described above, the carriage 14 must move up and down at the same rate at all four corners. If one corner is loaded more heavily than the others, the sprocket wheel units 29—32 and the sprocket chains 33—36 prevent any tendency of the more heavily loaded corners to sag. If through any mishap or defect one of the lifting devices at the four corners of the framework 5 should fail, the sprocket wheel units and the chains just referred to would still cause the carriage 14 to move up and down under the operation of the other three lifting devices. This is because the chains and the sprocket wheels are so related to each other by the shafts 27 and 28 that movement of one sprocket wheel unit, for example 29, requires the other three sprocket wheel units to move a like amount and to move in the proper direction. If the sprocket wheel unit 29 turns, its direct connection to the unit 30 through the shaft 27 causes the same amount of movement of the unit 30. The sprocket chains 33, 34, 35 and 36 will also transmit this movement to the units 31 and 32.

It is believed that the nature and advantages of the invention will be clear from the foregoing description.

The embodiment of the invention in which an exclusive property or privilege is claimed is defined as follows:

An elevator mechanism adapted to maintain an elevator carriage level under varying load conditions comprising a rectangular elevator framework having corner uprights at its four corners and cross frame members connecting the corner uprights, an elevator carriage movable up and down within said framework, a hydraulic jack in each corner upright, a sprocket wheel at the top of each jack, a sprocket chain secured to the framework and extending over the sprocket wheel, said sprocket chain being connected to the carriage for raising and lowering it, a first cross shaft journalled in the carriage adjacent to one end thereof and having four like sprocket wheels thereon, a second cross shaft journalled in the

carriage adjacent to the other end thereof and having four sprocket wheels like the wheels on the first shaft thereon, each shaft having two of the like sprocket wheels fixed thereto side by side at each end of the shaft, a first sprocket chain secured to the top of said framework directly over one of said sprocket wheels at one end of the first cross shaft and extending downwardly to and beneath said last named sprocket wheel, then over the corresponding sprocket wheel at the adjacent end of the second cross shaft, then downwardly to an anchor at the bottom of the framework, a second sprocket chain secured to the top of the framework directly over the other sprocket wheel at said adjacent end of said second shaft and extending downwardly to and beneath said last named sprocket wheel, then over the sprocket wheel alongside the sprocket wheel beneath which the said first sprocket chain extends, then downwardly to an anchor at the bottom of the framework, a third sprocket chain secured to the top of the framework directly over one of the sprocket wheels at the other end of said second cross shaft and extending downwardly to and beneath said last

named sprocket wheel, then over one sprocket wheel at the other end of said first cross shaft, then downwardly to an anchor at the bottom of the framework, a fourth sprocket chain secured to the top of the framework directly over the other sprocket wheel at said other end of said first cross shaft and extending downwardly to and beneath said last named sprocket wheel, then over the remaining sprocket wheel on said second cross shaft, then downwardly to an anchor at the bottom of the framework.

References Cited in the file of this patent

UNITED STATES PATENTS

1,350,087	Trapp	Aug. 17, 1920
1,468,482	Lightner et al.	Sept. 18, 1923
1,710,442	Warshaw	Apr. 23, 1929
2,268,800	Butzien	Jan. 6, 1942
2,593,630	Thompson	Apr. 22, 1952
2,639,784	Strock	May 26, 1953