March 21, 1939. L. J. CLAPP 2,150,912

AIR COMPRESSOR

Filed April 18, 1936 2 Sheets-Sheet 1

Fig. 1.

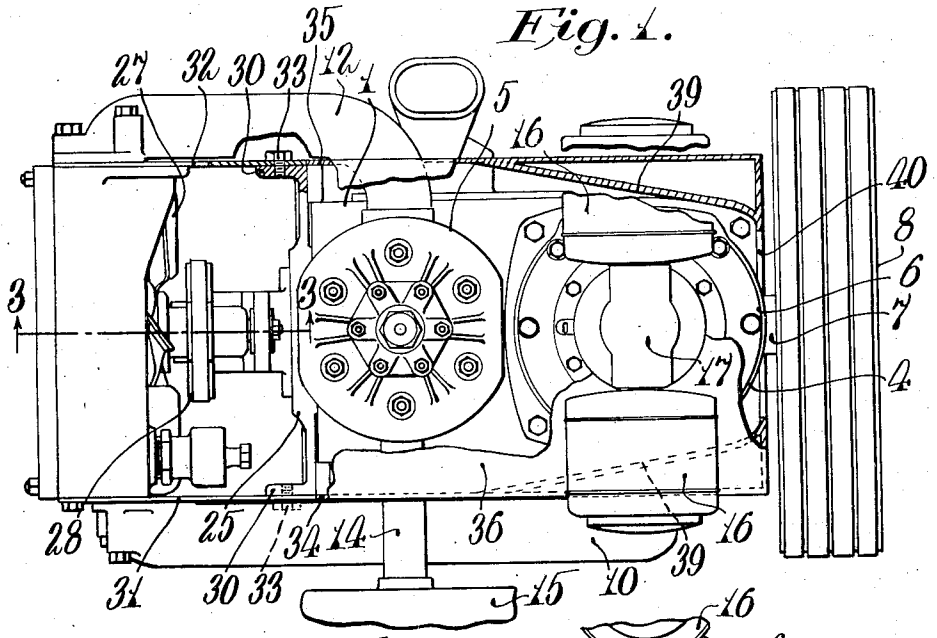

Fig. 2.

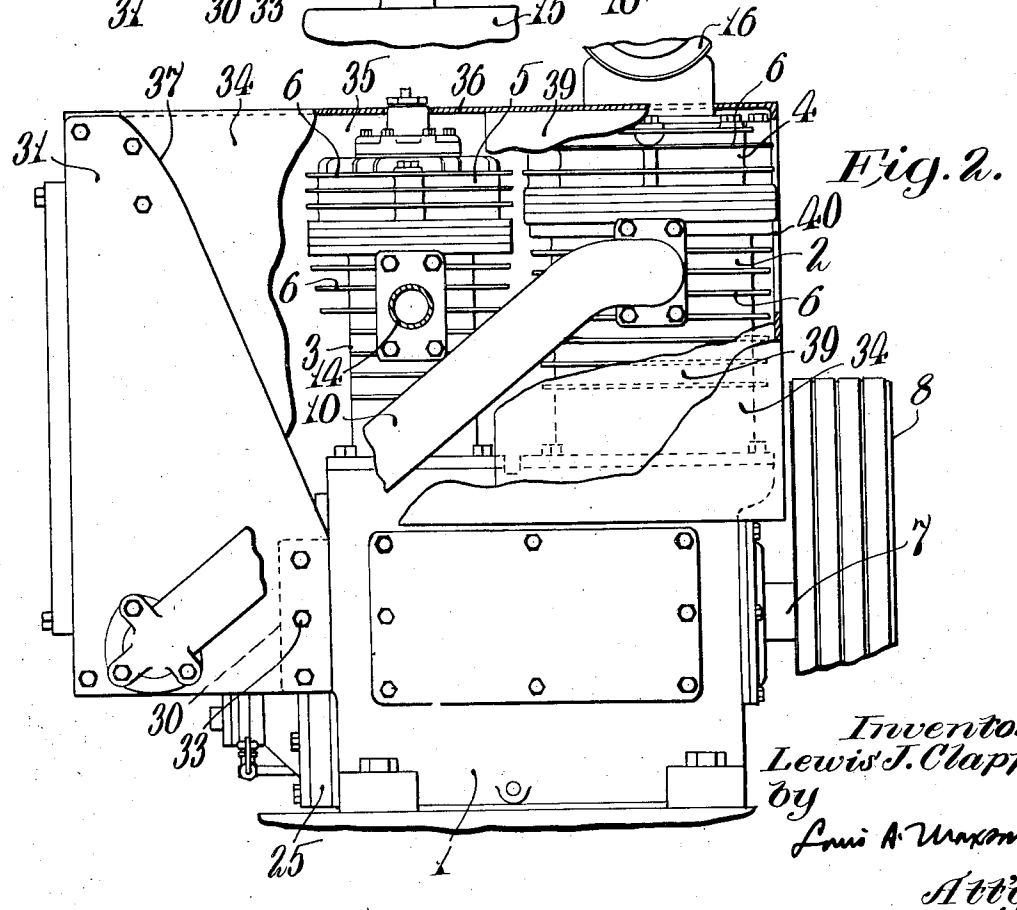

Inventor.
Lewis J. Clapp
By
Louis A. Maxson.
Atty.

March 21, 1939. L. J. CLAPP 2,150,912

AIR COMPRESSOR

Filed April 18, 1936 2 Sheets-Sheet 2

Fig. 3.

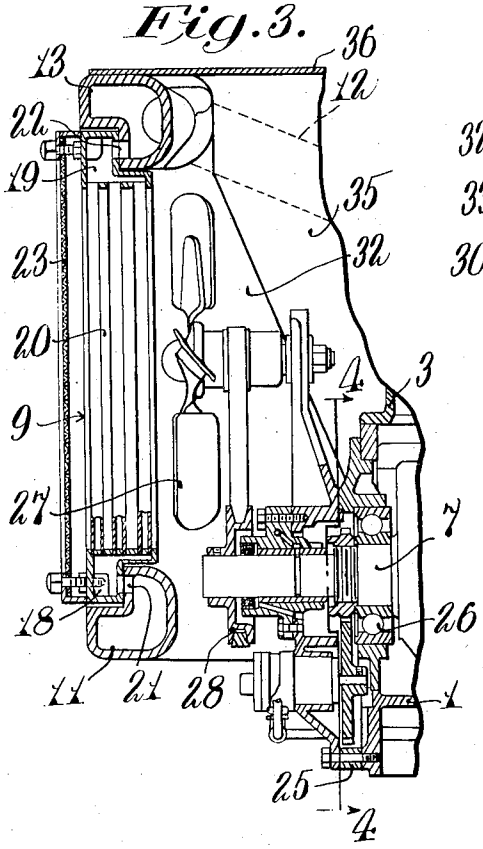

Fig. 4.

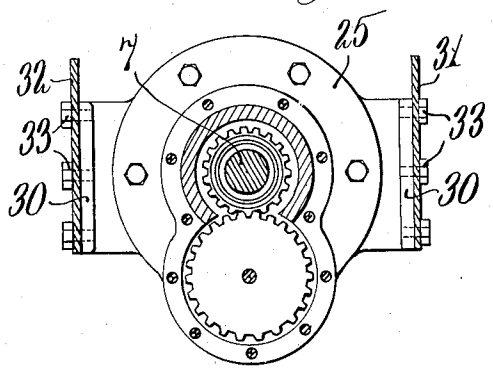

Fig. 5.

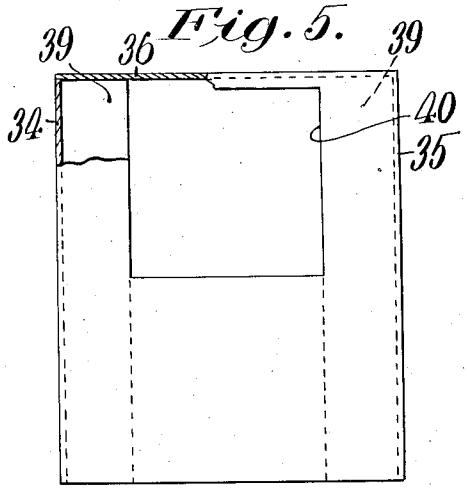

Fig. 6.

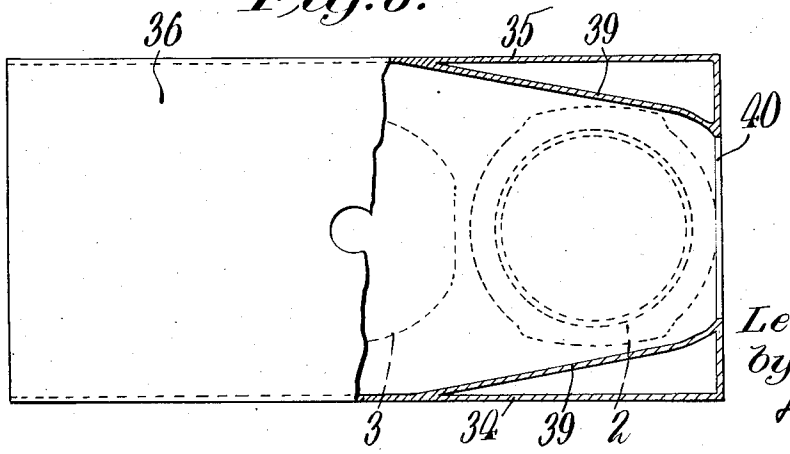

Inventor:
Lewis J. Clapp.
by
Louis A. Maxon.
Atty.

Patented Mar. 21, 1939

2,150,912

UNITED STATES PATENT OFFICE

2,150,912

AIR COMPRESSOR

Lewis J. Clapp, Michigan City, Ind., assignor to Sullivan Machinery Company, a corporation of Massachusetts

Application April 18, 1936, Serial No. 75,088

18 Claims. (Cl. 230—182)

My invention relates to air compressors, and more particularly to air-cooled air compressors.

An object of my invention is to provide an improved air compressor. Another object of my invention is to provide an improved air-cooled air compressor. A further object of my invention is to provide an improved air-cooled air compressor having improved means for securing the maximum cooling effect from the air displaced by the cooling fan. Yet another object of my invention is to provide an improved air-cooled air compressor having improved shrouding means. Still another object of my invention is to provide an improved air-cooled air compressor of the compound type. Other objects and advantages of the invention will hereinafter more fully appear.

In the accompanying drawings, in which one illustrative embodiment of the invention is shown—

Fig. 1 is a view partially in plan and partially with parts broken away, showing the illustrative embodiment.

Fig. 2 is a view partially in side elevation and in part with shrouding etc. broken away.

Fig. 3 is a fragmentary, central, vertical section on the plane of the line 3—3 of Fig. 1.

Fig. 4 is a fragmentary vertical section on the plane of the line 4—4 of Fig. 3.

Fig. 5 is a rear end view, partially broken away, of a portion of the shrouding of the compressor.

Fig. 6 is a top view, partially broken away, of the shrouding.

Referring to the drawings, it will be observed that a crankcase 1 supports a low pressure cylinder 2 of the air-cooled type, and a high pressure cylinder 3 of the air-cooled type. Each of said cylinders, and the heads 4 and 5 thereof respectively, are provided with cooling fins 6. The crankcase encloses a usual crankshaft, of which a portion is shown at 7, and the usual transmission means between said crankshaft and pistons within the cylinders 2 and 3. A combined drive pulley and flywheel 8 is mounted upon the crankshaft 7. An intercooler, generally designated 9, is connected in the air circuit between the low pressure cylinder 2 and the high pressure cylinder 3, a conduit 10 extending from the low pressure cylinder to a lower tank 11 of the intercooler, and a conduit 12 connecting an upper air tank 13 of the intercooler with the high pressure cylinder. A discharge line 14 leads from the high pressure cylinder discharge to a suitable receiver, of which a fragment is shown at 15. Dual air cleaners 16, 16 supply air through a branched intake connection 17 to the intake of the low pressure cylinder 2.

Between the tanks 11 and 13 of the intercooler there extend heat exchanger or radiator sections, including a lower header 18, an upper header 19, and connecting tubes 20; the headers being clamped to the tanks 11 and 13 respectively, and in fluid communication with the latter through openings 21 and 22. A suitable protective screen 23 is provided to protect the radiator sections.

The compressor crankcase 1 is provided with an end plate element 25 which supports a bearing 26 for one end of the crankshaft and also supports a mounting for a fan 27 which is driven by a pulley 28 on a reduced extension of the crankshaft. The end plate 25 is provided with side flanges 30, 30, to which there are secured plates 31 and 32 by suitable holding devices 33. These plates are generally triangular, or, more aptly, trapeziform, in shape and support between their forward upright ends the intercooler, for which they constitute the sole support. It will be noted that these plates not only perform the supporting function described, but also serve as air-directing means and, without more, would very effectively direct the air drawn by the fan through the intercooler over the high and low pressure cylinders.

However, additional air-directing means are desirably employed, and rearwardly of the side plates there are arranged side cover elements 34 and 35, connected by a top cover element 36, whereby a shrouding box is formed whose forward end 37 matches or fits with the rearward surfaces of the side plate and support elements 31 and 32, and whose rearward end is made herein with double walls, of which the inner ones 39 approach each other so as to form inner, fairly close, lateral fits for the fins 6 upon the low pressure cylinder 2; and an opening 40, herein generally rectangular in shape, provides for the egress of air from the rear of the shrouding case or box.

It will be observed that the side plates 31 and 32 support the intercooler and provide the forward portion of the shrouding. It will be observed that the fan is in line with the intercooler and also opposite the finned portions of the high and low pressure cylinders. It will be noted that the high pressure cylinder is of less diameter than the low pressure cylinder, and accordingly a considerable portion of the low pressure cylinder can receive a direct blast of air from the fan. It will be observed that the shrouding does

not fit close to the sides of the high pressure cylinder, so that there is opportunity for air displaced by the fan and moving outside the zone of the fins on the high pressure cylinder to pass to the walls of the low pressure cylinder. It will be noted that at the side of the low pressure cylinder the walls **39** of the shrouding approach the sides of the fins on the low pressure cylinder and force nearly all the air displaced by the fan to pass around and between the fins of the low pressure cylinder. It will be noted that the air is moving with increased velocity at this point, and that the rearward portion of the shrouding, due to the formation of the opening **40** and of the walls **39**, follows around partially behind the rearward wall of the low pressure cylinder, and thereby insures a most extended and effective cooling of the latter. It will be observed that there is an opening between the rear of the bottom of the intercooler and the forward end of the crankcase, through which some air-flow may take place, but the net effect of this opening is mainly an ingress of fresh air which has not passed through the intercooler. It will be noted that the intercooler is, in the illustrative embodiment of the invention, in planes transverse to a vertical plane including the crankshaft and the cylinder axes, and is substantially bisected by such plane, and that the plates **31**, **32** extend from the sides of the intercooler farther towards the cylinders than the fan-position.

As a result of the construction described, a very simple and effective cooling arrangement is provided, including a very rugged and substantial mounting for the intercooler and a highly efficient, directed, cooling-air-stream flow through the entire compressor.

While I have in this application specifically described one form which my invention may assume in practice, it will be understood that this form is shown for purposes of illustration, and that the invention may be modified and embodied in various other forms without departing from its spirit or the scope of the appended claims.

What I claim as new and desire to secure by Letters Patent is:

1. In combination, in a compressor, a crankcase, a crankshaft in said crankcase, a plurality of cylinders supported by said crankcase, a heat exchange device arranged at one end of said crankcase and cut by a vertical plane in which the axis of rotation of said crankshaft lies, supporting means for said heat exchange device, including only side plates supported at the opposite sides of the crankcase and extending longitudinally of the latter, and conducting means connecting said heat exchange device in series with said cylinders.

2. In combination, in a compressor, a crankcase, a plurality of cylinders supported by said crankcase, a heat exchange device, supporting means for said heat exchange device including only side plates supported at the sides of the crankcase, a fan between said side plates for blowing cooling-air toward said cylinders, said plates arranged to direct the cooling-air toward said cylinders, and conducting means connecting said heat exchange device in series with said cylinders.

3. In combination, in a compressor, a crankcase, a plurality of cylinders supported by said crankcase and arranged in a series along the same, a heat exchange device, supporting means for said heat exchange device, including only side plates supported at the sides of the crankcase, a fan between said side plates and between said heat exchange device and said cylinders for blowing cooling-air toward the latter, said side plates arranged to direct the cooling air toward said cylinders, and conducting means connecting said heat exchange device in series with said cylinders.

4. In combination, in a compressor, a crankcase, air-cooled cylinders supported thereon, means for conducting an air stream between said cylinders including an intercooler, and means for supporting said intercooler and shrouding said cylinders, including plate portions respectively supporting and laterally enclosing the intercooler and laterally shrouding the cylinders to provide cooling-air passage-ways of varying area about the sides of said cylinders.

5. In combination, in a compressor, a crankcase, air-cooled cylinders supported thereon in a series arranged longitudinally thereof, an intercooler connected in the air stream flowing between said cylinders, a fan between said intercooler and cylinders for blowing cooling-air toward the latter, and means for supporting said intercooler and shrouding said cylinders, including plate portions respectively supporting and laterally enclosing the intercooler and laterally shrouding the cylinders, and providing cooling-air passageways of diminishing area from said fan to the last cylinder.

6. In combination, in a compressor, a crankcase, air-cooled cylinders supported thereon, means for conducting an air stream between said cylinders including an intercooler, and means for supporting said intercooler and shrouding said cylinders, including plate portions respectively supporting and laterally enclosing the intercooler and shrouding the cylinders laterally and at their tops to provide cooling-air passage-ways of varying area about the sides of said cylinders.

7. In combination, a compressor having a vertical cylinder and a crankshaft, a vertical intercooler substantially bisected by a vertical plane which includes the axis of said cylinder and the axis of said crankshaft and arranged in planes perpendicular to such plane and largely in a position above the horizontal plane including the crank shaft axis, a fan above said crank shaft axis and between said intercooler and cylinder for blowing cooling-air toward the latter, and air-directing plates extending from the sides of said intercooler towards said cylinder past said fan.

8. In combination, a compressor having a vertical cylinder and a crankshaft, a vertical intercooler substantially bisected by a vertical plane which includes the axis of said cylinder and the axis of said crankshaft and arranged in planes perpendicular to such plane and largely in a position above the horizontal plane including the crank shaft axis, a fan above said crank shaft axis and between said intercooler and cylinder for blowing cooling-air toward the latter, and air-directing plates extending from the sides of said intercooler towards said cylinder past said fan and supporting said intercooler.

9. In combination, a compressor having a vertical cylinder and a crankshaft, a vertical intercooler substantially bisected by a vertical plane which includes the axis of said cylinder and the axis of said crankshaft and arranged in planes perpendicular to such plane, a fan between said intercooler and cylinder for blowing cooling-air toward the latter, and air-directing plates extending from the sides of said intercooler towards

said cylinder past said fan and along the sides of said cylinder and forming cooling-air passageways of diminishing area thereabout.

10. In combination, a compressor having a crankcase, a vertical cylinder and a crankshaft, a vertical intercooler substantially bisected by a vertical plane which includes the axis of said cylinder and the axis of said crankshaft and arranged in planes perpendicular to such plane and largely in a position above the horizontal plane including the crank shaft axis, a fan above said crank shaft axis and between said intercooler and cylinder for blowing cooling-air toward the latter, and air-directing plates extending from the sides of said intercooler towards said cylinder past said fan and supported at their lower rearward edges by said crankcase.

11. In combination, in a compressor, a crankcase, a low pressure cylinder thereon adjacent one end thereof, a high pressure cylinder on said crankcase adjacent the other end thereof, an intercooler in spaced relation to the last mentioned end of the crankcase and extending parallel to the cylinder axes and transversely of the compressor, a fan between said intercooler and said high pressure cylinder for blowing cooling-air toward said high and low pressure cylinders, and means including lateral plates for supporting said intercooler and directing the flow of air through passageways of diminishing area from said fan successively past said cylinders.

12. In combination, in a compressor, a crankcase, a low pressure cylinder on said crankcase and adjacent one end thereof, a high pressure cylinder on said crankcase and adjacent the other end thereof, an intercooler in spaced relation to the last mentioned end of the crankcase and extending parallel to the cylinder axes and transversely of the compressor, a fan between said intercooler and said high pressure cylinder for blowing cooling-air toward said high and low pressure cylinders, and means including lateral plates for supporting said intercooler and directing the flow of air from said fan successively past said cylinders and at an increased rate past said low pressure cylinder.

13. In combination, in a compressor, a crankcase, a compressor cylinder thereon, a detachable end plate for said crankcase, a heat exchange device, supporting means for said heat exchange device mounted on and entirely supported by said end plate, and conducting means for connecting the compressor cylinder with said heat exchange device.

14. In combination, in a compressor, a crankcase, a compressor cylinder thereon, a detachable end plate for said crankcase, a heat exchange device, supporting means for said heat exchange device including only side plates supported solely by said end plate, and conducting means for connecting the compressor cylinder with said heat exchange device.

15. In combination, in a compressor, a crankcase, a compressor cylinder thereon, a detachable end plate for said crankcase, bearing means supported by said end plate for the compressor crankshaft, a heat exchange device, supporting means for said heat exchange device mounted on and entirely supported by said end plate, and conducting means for connecting a compressor cylinder with said heat exchange device.

16. In combination, in a compressor, a crankcase, a compressor cylinder thereon, a detachable end plate for the crankcase, said end plate having lateral lugs, a heat exchange device, supporting means for said heat exchange device including only side plates supported solely by said end plate and secured to said end plate lugs, and conducting means for connecting the compressor cylinder with the heat exchange device.

17. In combination, in a compressor, a crank case, air cooled cylinders supported thereon, an intercooler connected in the air stream flowing between said cylinders, and means for supporting said intercooler and shrouding said cylinders, including plate portions respectively supporting and laterally enclosing the intercooler and shrouding the cylinders laterally and at their tops, said shrouding extending around partially behind the cylinder wall farthest from the intercooler.

18. In combination, a compressor having a crankcase supporting a vertical cylinder, and a crankshaft below said cylinder, a vertical intercooler in planes to which the axis of said crankshaft is perpendicular and which lies mainly above the horizontal plane which includes said crankshaft axis, means for supporting said intercooler in spaced relation to said cylinder including a mounting adjacent the bottom of said intercooler connected to one end of said crank case, a fan between the cylinder and intercooler driven from said crankshaft and rotatable on an axis above the crankshaft axis, and shrouding means for restricting the flow of air from said fan to the horizontal zone of said cylinder.

LEWIS J. CLAPP.