F. A. HOLLENBECK.

FIREARM.

APPLICATION FILED FEB. 12, 1912.

1,068,586. **Patented July 29, 1913.**

3 SHEETS—SHEET 1.

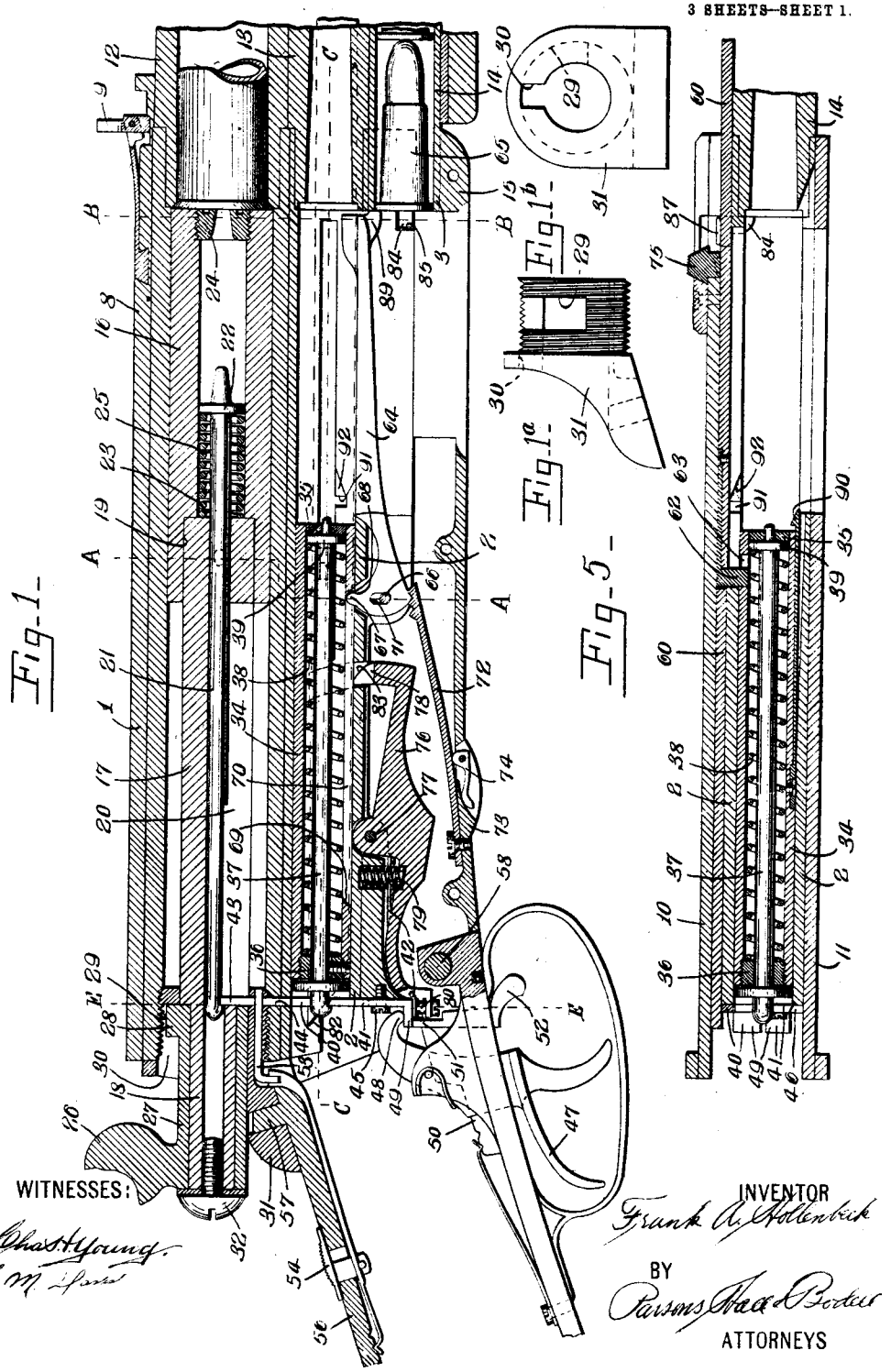

Fig. 1.

Fig. 1a.

Fig. 1b.

Fig. 5.

WITNESSES:

Chas. H. Young.

L. M. Ipsen

INVENTOR

Frank A. Hollenbeck

BY

Parsons, Read & Bodell

ATTORNEYS

F. A. HOLLENBECK.

FIREARM.

APPLICATION FILED FEB. 12, 1912.

1,068,586.

Patented July 29, 1913.

3 SHEETS—SHEET 2.

Fig. 3.

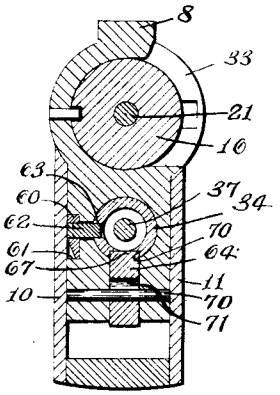

Fig. 4.

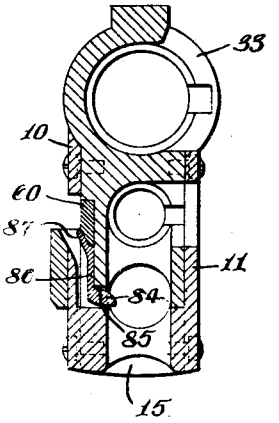

Fig. 2.

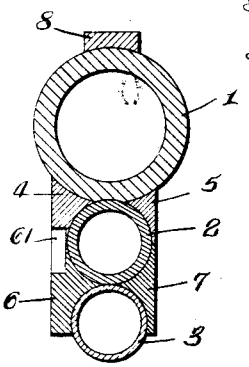

Fig. 6.

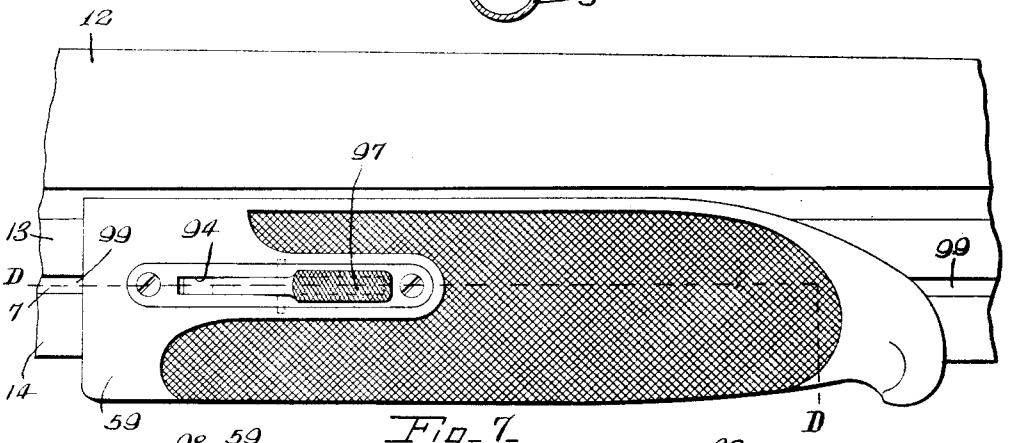

Fig. 7.

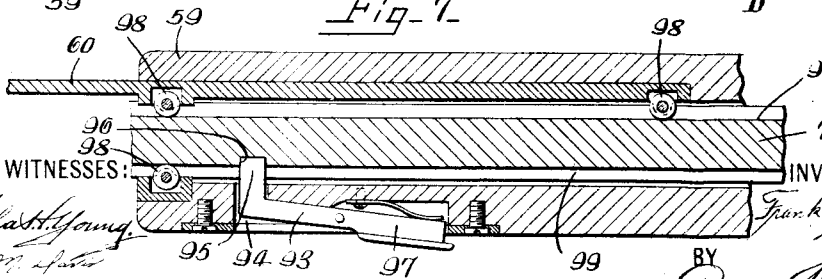

WITNESSES:

Chas. F. Young.

L. M. Peaslee

INVENTOR

Frank A. Hollenbeck

BY

Parsons Hall & Brice

ATTORNEYS

F. A. HOLLENBECK.

FIREARM.

APPLICATION FILED FEB. 12, 1912.

1,068,586. **Patented July 29, 1913.**

3 SHEETS—SHEET 3.

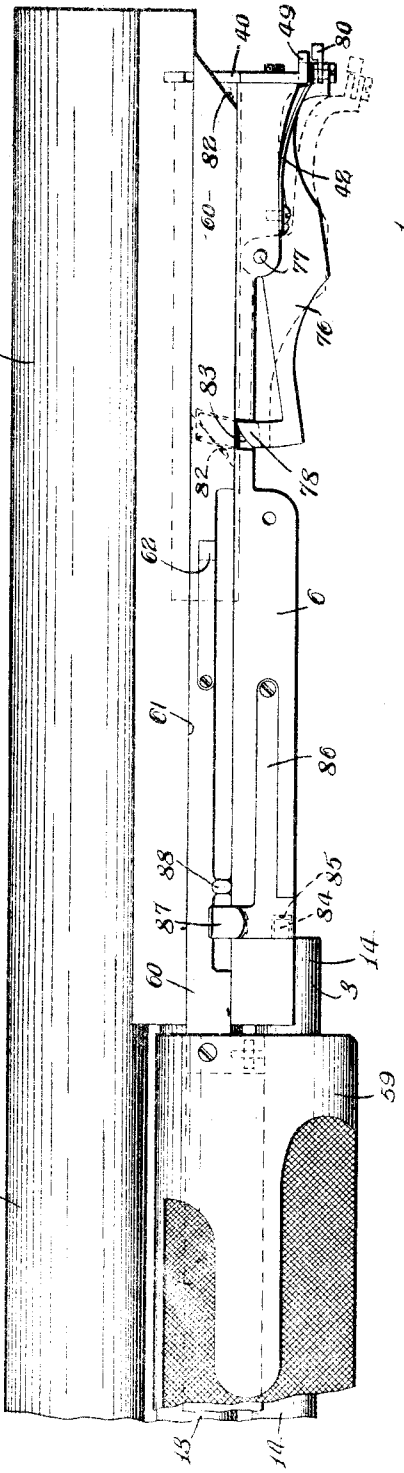

Fig-8-

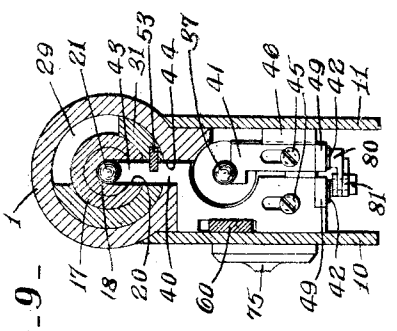

Fig-9-

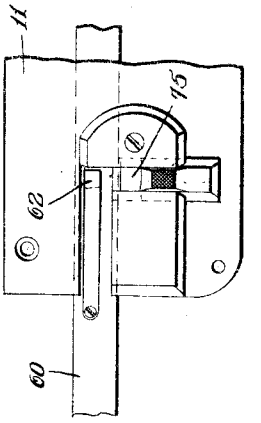

Fig-10-

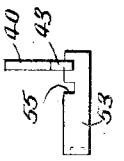

Fig-11-

WITNESSES:

Chas H Young

L M Hand

INVENTOR

Frank A Hollenbeck

BY

Parsons Hall & Bodell

ATTORNEYS

UNITED STATES PATENT OFFICE.

FRANK A. HOLLENBECK, OF SYRACUSE, NEW YORK.

FIREARM.

1,068,586. Specification of Letters Patent. Patented July 29, 1913.

Application filed February 12, 1912. Serial No. 677,062.

To all whom it may concern:

Be it known that I, FRANK A. HOLLENBECK, of Syracuse, in the county of Onondaga and State of New York, have invented a certain new and useful Firearm, of which the following is a specification.

This invention has for its object constructions whereby the firearm is simple in operation, economical in manufacture, and compact in its assembly; and it consists in the combinations and constructions hereinafter set forth and claimed.

In describing this invention reference is had to the accompanying drawings in which like characters designate corresponding parts in all the views.

Figure 1 is a longitudinal sectional view of the frame and firing mechanism of my firearm, and contiguous parts, the parts of the rifle mechanism or action being shown in the positions occupied thereby when the breech bolt and fore-piece are in their rear positions. Figs. 1ª and 1ᵇ are, respectively, side and end elevations of the plug closing the rear end of the tube of the frame alined with the shot gun barrel. Fig. 2 is a vertical sectional view through the frame of the gun, parts being omitted. Figs. 3 and 4 are vertical sectional views taken, respectively, on lines "A—A" and "B—B", Fig. 1, parts being omitted. Fig. 5 is a longitudinal sectional view on the plane of line "C—C", Fig. 1, parts being omitted. Fig. 6 is a fragmentary view illustrating in elevation the fore-piece and contiguous parts of the gun. Fig. 7 is a sectional view on line "D—D" Fig. 6. Fig. 8 is an elevation of a portion of the gun, the side plates and other parts being removed, and the fore-piece being shown as in its rearmost position. Fig. 9 is a sectional view on line "E—E" Fig. 1. Fig. 10 is a fragmentary view of one of the side plates and contiguous parts. Fig. 11 is a detail view of one of the safeties of this firearm.

One of the main objects of this invention is to form the frame of the firearm and parts of the firing mechanism of stock pieces rigidly secured together so that the greater part of the machine work, now performed in shaping blocks of steel for gun frames and other parts, is avoided, and hence the cost of manufacture of the gun greatly reduced.

Another object is to provide for the removal of the breech bolt and other parts through the rear end of the frame.

Other objects will appear throughout the specification.

The frame or receiver is formed of stock pieces comprising tubes arranged one above the other, solid metal strips integrally united to the tubes for securing the same together, and, as the gun here illustrated is a combination shot gun and repeating rifle, there are three tubes to be alined with the shot gun barrel, the rifle barrel and the magazine tube, respectively.

1, 2 and 3 are tubes arranged one above the other with their axes preferably arranged in the same vertical plane, the intermediate tube 2 being tangent at diametrically opposite points to the tubes 1 and 3.

4 and 5, Fig. 2, are metallic strips arranged between the tubes 1 and 2 and integrally united thereto as by soldering or brazing. 6 and 7 are similar metal strips arranged between the tubes 2 and 3 and on opposite sides thereof and similarly united thereto, said strips 4, 5, 6 and 7 being preferably formed with faces conforming to the curvature of the tubes, and these faces are preferably not machined but are formed thereon while the strips are being drawn or rolled. The strips 6 and 7, secured to the lower side of the intermediate tube, may be cut to support and accommodate parts of the mechanism of the gun. The tube 3 is shorter than the tubes 1 and 2 but the strips 6, 7 extend to the rear end of the frame. 8 is an additional strip secured to the upper side of the tube 1 and extending lengthwise thereof, this strip serving to support the sight 9.

10 and 11 are side plates lying against the strips 4, 5, 6 and 7 and detachably secured in position.

In Fig. 2 the tubes 1, 2 and 3 and strips 4, 5, 6 and 7 are shown as separate pieces by different cross sectioning and in the remaining figures, in order to avoid confusion, cross sectioning of all parts of the frame is the same and the lines of demarcation between the tubes and strips are indicated in Fig. 1.

12, 13 and 14 are respectively the shot gun barrel, rifle barrel and the magazine tube alined respectively with the tubes 2 and 3, the magazine tube 14 being preferably integral with the tube 3 and the barrels 12,

13 being of different pieces from the tubes 1, 2 and integrally secured in position to the tubes and to the usual frame pieces inserted between the barrel and the magazine tube. The magazine tubes 3, 14 are also secured to a frame piece including a block 15, Fig. 1, to which the side plates are secured.

The breech bolt of both the shot gun and rifle barrels include tubes formed of stock tubing.

16 and 17 are tube sections arranged end to end, the front tube section 16 slidably fitting within the tube 1, and the rear section being of less diameter than the front section. Said sections 16 and 17 form the body of the breech bolt slidable in the tube 1. The rear tube 17 is formed with a reduced portion 18 at its rear end which moves through the rear end of the frame and is provided with a handle 26 by which the breech bolt in the tube 1 may be operated. As here shown in Fig. 1, the front tube 16 is formed with a countersunk opening 19 in its rear end and the front end portion of the rear tube fits into the countersunk opening 19. The rear tube 17 is also formed with a lengthwise slot or sear opening 20.

21 is a firing pin carried within the rear tube 17 and extending into the front tube 16 and having a shoulder 22 near its front end which is opposed to an abutment 23 formed by the front end surface of the rear tube 17, the point of the firing pin being movable through a perforation in a plug 24 which threads into the front end of the front tube 16.

25 is a spring interposed between the shoulder 22 and the abutment 23.

26 is a handle mounted on the reduced rear end portion 18 of the tube 17, said handle having a sleeve portion 27 encircling said reduced portion 18 and formed with a radial shoulder 28 which interlocks by a partial rotary movement with a slot 29, Figs. 1, 1a, 1b and 9, concentric with the axis of the tube 1, which slot 29 opens into a slot 30, Figs. 1, 1a and 1b, extending lengthwise of the tube 1 and opening through the rear end of the frame, the slots 29, 30 being formed in a removable plug 31 which threads into the rear end of the tube 1. The sleeve 27 is held in position by a screw 32.

The breech bolt in the tube 1 is normally locked in its forward position by reason of the engagement of the radial shoulder 28 with the slot 29, and is movable by hand by turning such breech bolt until said shoulder is alined with the lengthwise slot 30, in which position the bolt may be moved rearwardly by hand for opening the breech to permit a cartridge to be inserted in the firing chamber of the gun through the breech opening 33, Figs. 3 and 4. The bolt in the tube 1 is provided with a suitable shell remover. The operation of this type of breech bolt is well known and further description is thought to be unnecessary.

The breech bolt for the rifle barrel, which bolt is movable in the tube 2, is also formed of a stock tube section 34 having plugs 35, 36 at its front and rear ends.

37 is a firing pin located in the tube 34 and having its point projecting through the front plug 35, the firing pin also extending through the rear plug 36 in order to be engaged by the sear. A spring 38 encircles the firing pin within the tube and is interposed between the plug 36 and a shoulder 39 near the front end and the firing pin 37.

40 and 41, Figs. 1, 5 and 9, are sears for coacting with the firing pins 21 and 37, respectively, these sears being usually movable plates slidable vertically on the rear end face of the frame and being normally pressed upwardly by sear springs 42, Fig. 8, the sear 40 having an arm 43 extending upwardly through a vertical slot 44 in the frame, and being held in position by such slot and the sear opening. Each sear 40 or 41 is held in position by a screw 45 extending through a lengthwise slot therein, Fig. 9, and the sear 41 is additionally held in place by a block 46, Fig. 9, secured to the rear end of the strip 7 and having a beveled edge engaging a complementary beveled edge on the sear 41. The sears 40, 41 are depressed against the action of their springs by suitable triggers as 47 each having means as a hook-shaped or overhanging end 48 for engaging a rearwardly extending lug 49 at the lower end of each sear.

Suitable safety devices are employed for holding the sears 40, 41 in elevated positions, the device for the sear 41 consisting of a sliding part 50, Fig. 1, having a shoulder 51 movable under the lug 49 of the sear 41, and a depending handle 52 located in front of the trigger. The safety device for the sear 40 comprises a slide 53 movable in a horizontal slot in the plug 31, Figs. 1 and 9, and a hand piece 54 connected to the slide and movable on the upper face of the stock of the gun. The slide 53 is in effect a locking bolt which enters a notch in the arm 43 of the sear, Fig. 9, and is formed with a notch 55, Fig. 11, movable into alinement with the sear 40 to permit vertical movement thereof.

The stock 56 of the gun is secured to the frame by a pin 57, Fig. 1, extending in an opening in the plug 31 and by a transverse fastening member 58.

The rifle mechanism of the firearm also includes a cartridge carrier, a cartridge stop, means for locking the breech bolt in forward position, and hand operated means for controlling the operation of the breech bolt, cartridge carrier and stop, and said means.

The means for reciprocating the breech bolt 34 comprises a movable fore-piece 59 having a rearwardly extending arm 60 rigid therewith and movable in a groove 61, Fig. 2, formed in the frame, between the frame and the side plate 10, said arm 60 being detachably secured to the breech bolt by a spring pressed lock or latch 62 which enters a slot 63 in the bolt 34, Figs. 3 and 5, the slot being longer than the width of the lock or latch 62 so that the lock or latch 62 is connected by a lost-motion connection to the breech bolt for a purpose hereinafter explained. Said arm also moves through a cut-out in the sear 40, Figs. 8 and 9.

As here illustrated the carrier comprises a member 64 normally arranged in position to receive a cartridge as 65, from the magazine tube, said member being shown in Fig. 1, as out of its normal or starting position as the breech bolt is in its rear position, and as pivoted at 66 to the strips 6, 7 and formed with a projection 67 extending upwardly into the tube 2 into position to be engaged by cam surfaces 68 and 69 at opposite ends of a lengthwise slot 70 in the breech bolt tube 34. The arrangement of the surfaces 68 and 69 is such that as the breech bolt 34 approaches the limit of its rearward movement, the surface 68 engages the shoulder 67 and tilts the front end of the carrier 64 upwardly, thereby transferring the cartridge into a position in front of the breech bolt 34; and as the breech bolt 34 approaches the limit of its forward movement, the surface 69 engages said shoulder 67 and returns the carrier to its normal position.

The carrier is here shown as formed with a slot 71, Fig. 1, for receiving the pivot 66 and permitting the carrier to be moved downwardly, in order to withdraw the shoulder 67 out of the path of the breech bolt 34 when it is desired to remove the breech bolt 34. The carrier is normally supported or held from movement lengthwise of the slot 71 by a suitable spring as a flat spring 72 fixed at one end to a plate 73 held between the lower edges of the side plates 10, 11, and is normally held under tension by a cam lever 74 which is pivoted to said plate 73 and operable to relieve the carrier 64 of the tension of the spring.

Means is also provided for relieving the latch 62 of the tension of its spring when it is desired to release the breech bolt from the arm 60. Said means as here shown comprises a removable cover piece 75 for an opening in the side plate 11, the cover piece 75 being arranged to come opposite the latch 62 when the fore-piece 59 is at the limit of its forward movement and thereby prevent the locking part or latch 62 from being disengaged from the breech bolt 34, and said cover piece 75 being slidable into the position shown in Fig. 10 from the position shown in Fig. 9 to permit the locking part of the latch 62 to be withdrawn by its spring.

When the carrier 64 and latch 62 are relieved of the tension of their springs, the breech bolt 34 can be easily removed from the tube or guide 2 through the rear end thereof upon the removal of the stock 56 and the shifting of the rifle sear 41 down out of the path of the breech bolt 34.

76 is a member for holding the breech bolt 34 in its forward position, said member being here shown as pivoted at 77, Figs. 1 and 8, between its ends and having a shoulder 78 at its front end movable through the tube 2 into a position in rear of the breech bolt 34 when the breech bolt is in its forward position, said member being held in its normal position by a spring 79. The member 76 is formed with a rearwardly extending arm provided with means as a horizontally shiftable pivoted lug 80 for normally holding the sear 41 in elevated position when the breech bolt is in its rearward position, and hence preventing the operation of the sear by the trigger at that time. Said lug 80, Figs. 1, 8 and 9, is movable on its pivot 81 horizontally by hand after the stock has been removed, to permit the depression of the sear 41 far enough to permit the breech bolt 34 to be removed, the member 76 being in the position shown in Fig. 1 when the bolt is being removed. The locking member 76 is operable on its pivot 77 against the action of its spring 79, by a cam surface 82 provided on the rearwardly extending arm 60 of the fore-piece 59, the cam 82 engaging the nose 83 provided on said member 76 and located in the path of said cam. The cam 82 operates to move the locking member 76 out of operative position while the locking member or latch 62 carried by the arm 60 is moving in the slot 63 in the breech bolt 34 and taking up the lost motion between said arm 60 and the breech bolt 34. The normal position of the cam 82 and the member 76 is indicated in dotted lines Fig. 8.

84 is the cartridge stop, Figs. 1, 4 and 8, movable through an opening 85 in the strip 6 in rear of the tube 3, said stop operating to hold the cartridge from feeding from the magazine when the carrier is not in position to receive the cartridge and when there is a cartridge on the carrier. The stop 84 is carried by a flat spring 86, Fig. 8, secured at one end to the outer face of the strip 6 between the frame and the side plate 11, and the spring 86 also carries an arm 87 extending upwardly into the path of a cam 88 provided on the arm 60 of the fore-piece 59. The cam 88 operates to engage the arm 87 during the movement of the fore-piece and

momentarily moves the cartridge stop at certain times out of operative position sufficiently to permit the rim of the cartridge to clear the stop so that the cartridge may be forced onto the carrier by the magazine spring.

The cartridge carrier 64 is normally empty when the breech bolt 34 is closed and during rearward movement of the fore-piece, the breech bolt 34 is carried rearwardly extracting and ejecting the empty shell, and as the breech bolt 34 approaches the limit of its rearward movement and after the empty shell is ejected, the cam 88 moves the cartridge stop 84 out of operative position permitting a cartridge to be fed from the magazine to the carrier. The breech bolt which has not quite reached the limit of its rearward movement then actuates the carrier owing to the engagement of the surface 68 and the arm 67, and the carrier transfers the cartridge thereon into position in front of the breech bolt. During the forward movement of the breech bolt 34, the cartridge is carried into the firing chamber. As the carrier approaches its normal position, the cam 88 again moves the stop 84 out of operative position during the return of the fore-piece to its starting position, and while the stop 84 is out of operative position, a stop 89 on the carrier 64 prevents the cartridges in the magazine from feeding before the carrier and stop 84 assume their normal positions.

The breech bolt carries a suitable extractor 90 for engaging the rim of the cartridge and the frame is formed with a notch 91 and a beveled surface 92 approaching the notch for engaging a point on the rim of the cartridge diametrically opposite to that engaged by the extractor 90, so that as the breech bolt 34 approaches the limit of its rearward movement the shell is deflected and ejected out through the exit opening.

The fore-piece is preferably provided with a suitable device 93, Figs. 6 and 7, for normally holding it from operation, said device comprising a spring pressed lever pivoted between its ends in a recess 94 in the fore-piece and having one end 95 movable into and out of a notch 96 in the strip 7 to which the rifle barrel 13 and magazine tube 14 are secured, and having its other arm formed with a finger piece 97 exposed through the grip surface of the fore-piece in position to be engaged and depressed by the fingers of the hand gripping the fore-piece. Preferably antifriction members as rollers 98 are interposed between the fore-piece and the strip 7, these rollers being carried by the fore-piece and running in grooves or guideways 99 formed in opposite sides of the strip 7. Said rollers are so located as to prevent binding and undue friction during the operation of the fore-piece.

My gun is particularly advantageous in that it is economical in manufacture as it can be made with minimum machine work, and further in that the parts thereof can be readily removed and replaced.

What I claim is:

1. In a firearm, a frame formed of stock pieces and comprising a tube for receiving the breech bolt of the firearm and for connection with the barrel thereof, and strips integrally secured to the tube beneath the barrel, and extending lengthwise thereof, and side plates for housing the mechanism of the gun, lying against said strips, substantially as and for the purpose described.

2. A frame for firearms formed of stock pieces comprising a tube for receiving the breech bolt of the firearm and for connection with the barrel thereof, a second tube extending lengthwise of the first tube and adapted to be connected with the magazine tube of the gun, and metal strips integrally secured to both tubes on opposite sides thereof, substantially as and for the purpose specified.

3. In a firearm, a frame formed of stock pieces comprising a tube for the breech bolt of the firearm, and for connection to the barrel thereof, a solid strip integrally secured to the tube running lengthwise of the upper side thereof for supporting the sights and reinforcing the upper side of the tube, solid strips secured to the under side of the tube and extending lengthwise thereof, and side plates for housing the mechanism of the gun, the plates engaging the latter strips, substantially as and for the purpose set forth.

4. A frame for firearms formed of stock pieces comprising two tubes extending lengthwise of, and arranged tangent to, each other, and metal strips inserted between the tubes on opposite sides of their line of tangency and integrally secured thereto for rigidly uniting the tubes together, substantially as and for the purpose described.

5. A frame for firearms formed of stock pieces comprising tubes arranged one above the other, metal strips arranged on opposite sides of the tubes and integrally secured thereto for rigidly uniting the tubes together, substantially as and for the purpose specified.

6. A frame for firearms formed of stock pieces comprising tubes arranged one above the other, metal strips arranged on opposite sides of the tubes and integrally secured thereto for rigidly uniting the tubes together, and metal strips integrally secured to the lower side of the lower tube and located on opposite sides of a vertical plane containing the axes of the tubes, substantially as and for the purpose set forth.

7. A frame for firearms formed of stock pieces comprising tubes arranged one above

the other, metal strips arranged on opposite sides of the tubes between the upper and the intermediate tubes, an additional metal strip between the intermediate and the lower tubes, the strips being integrally secured to the tubes for rigidly uniting the tubes together, substantially as and for the purpose described.

8. In a firearm, the combination of a frame formed of stock pieces comprising tubes arranged one above the other, metal strips arranged on opposite sides of the tubes and secured integrally thereto for rigidly uniting the tubes together, and side plates detachably secured to the strips on opposite sides of the tubes and below the upper tube, gun barrels supported by the frame and alined respectively with the upper and intermediate tubes, and a magazine tube supported by the frame and alined with the lower tube, substantially as and for the purpose specified.

9. In a firearm, a frame formed of stock pieces comprising a tube for connection with the barrel of the firearm, and metal strips integrally secured to the tube and extending lengthwise thereof, side plates secured to said strips, and firing mechanism comprising a breech bolt movable in said tube, the breech bolt comprising a body formed of stock tubing, substantially as and for the purpose set forth.

10. In a firearm, a frame formed of stock pieces comprising tubes arranged one above the other, metal strips arranged on opposite sides of the tubes and extending between the same and being integrally secured thereto for rigidly uniting the tubes together, a breech bolt slidable in one of the tubes and comprising a body formed of stock tubing, a barrel supported by the frame in alinement with the tube containing the breech bolt, and a magazine tube supported by the frame and alined with the other tube of the frame, substantially as and for the purpose described.

11. In a firearm, a frame, firing mechanism comprising a member movable in the frame and formed with an opening, means for operating said member comprising a movable fore-piece having a rearwardly extending arm connected to said member, a spring pressed locking part carried by the arm and extending into the opening, and means for normally holding the spring of said part under tension and being operable to relieve said part of the tension of the spring, substantially as and for the purpose set forth.

12. In a firearm, a frame comprising a body, and a detachable side plate on one side of the body formed with an opening, firing mechanism including a member movable in the frame, and means for operating said member comprising a fore-piece having a rearwardly extending arm movable between the body and the side plate, a spring-pressed locking part carried by the arm and held in position by the side plate, said locking part detachably engaging said member and being movable in such opening for holding the spring-pressed member in its normal position in engagement with the movable member, and upon removal permitting said part to be relieved of the tension of its spring, substantially as and for the purpose described.

13. In a firearm, a frame comprising a body formed with a guide, and firing mechanism including a sliding breech bolt movable in the guide and removable therefrom through the rear end thereof, means for operating the breech bolt comprising a fore-piece having a rearwardly extending arm, and a movable locking part for detachably securing said arm to the breech bolt, the frame including a side plate normally arranged to engage and hold the locking part from detachment, substantially as and for the purpose specified.

14. In a firearm, a frame comprising a body and a detachable side plate on one side of the body formed with an opening, the body being formed with a guide open at its rear end, firing mechanism including a breech bolt slidable in the guide and removable through the rear end thereof, means for operating the breech bolt comprising a fore-piece having a rearwardly extending arm movable between the body and the side plate, a locking part carried by such arm and detachably connected to the breech bolt and being movable opposite such opening for detaching the same from the breech bolt, and a closure for the opening, substantially as and for the purpose set forth.

15. In a firearm, a frame formed with a tubular guide, the guide being open at its rear end, firing mechanism comprising a sliding breech bolt movable in the guide, a cartridge carrier supported by the frame and having a shoulder extending into the guide into position to be engaged by the breech bolt, a spring for holding the carrier in its normal position with said shoulder projecting into the guide, and means operable to relieve the carrier of the tension of the spring, substantially as and for the purpose specified.

16. In a firearm, a frame formed with a tubular guide, the guide being open at its rear end, firing mechanism comprising a sliding breech bolt movable in the guide, a cartridge carrier supported by the frame and having means extending into the guide into position to be engaged by the breech bolt, a spring arranged to yieldingly hold the carrier in its normal position with said shoulder projecting into the guide and being movable out of operative position for

permitting the breech bolt to be removed from the guide, and operating means for the breech bolt, said means being detachably secured to the breech bolt, substantially as and for the purpose set forth.

17. In a firearm, a frame formed with a tubular guide, the guide being open at its rear end, firing mechanism comprising a sliding breech bolt movable in the guide, a cartridge carrier supported by the frame and having means extending into the guide into position to be engaged by the breech bolt, a spring arranged to yieldingly hold the carrier in its normal position with said shoulder projecting into the guide and being movable out of operative position for permitting the breech bolt to be removed from the guide, operating means comprising a movable fore-piece having a rearwardly extending arm rigid therewith, and spring-pressed locking means for detachably connecting the arm to the breech bolt, substantially as and for the purpose described.

18. In a firearm, a frame formed with a tubular guide, the guide being open at its rear end, firing mechanism comprising a sliding breech bolt movable in the guide, a cartridge carrier supported by the frame and having means extending into the guide into position to be engaged by the breech bolt, a spring arranged to yieldingly hold the carrier in its normal position with said shoulder projecting into the guide and being movable out of operative position for permitting the breech bolt to be removed from the guide, operating means comprising a movable fore-piece having a rearwardly extending arm rigid therewith, spring-pressed locking means for detachably connecting the arm to the breech bolt, and means for relieving the carrier and the locking means from the actions of their springs, substantially as and for the purpose described.

19. In a firearm, a frame formed with a tubular guide, the guide being open at its rear end, firing mechanism comprising a sliding breech bolt movable in the guide and removable from the frame through the rear end of the guide, a cartridge carrier supported by the frame and having means extending into the guide and into position to be engaged by the breech bolt, the carrier being connected to the frame by a pin-and-slot pivotal connection, and a spring for normally yieldingly holding the carrier from movement lengthwise of its pin-and-slot connection, with said shoulder projecting into the guide, substantially as and for the purpose set forth.

20. In a firearm, a frame formed with a tubular guide, the guide being open at its rear end, firing mechanism comprising a sliding breech bolt movable in the guide and removable from the frame through the rear end of the guide, a cartridge carrier supported by the frame and having means extending into the guide and into position to be engaged by the breech bolt, the carrier being connected to the frame by a pin-and-slot pivotal connection, a spring for normally yieldingly holding the carrier from movement lengthwise of its pin-and-slot connection, with said shoulder projecting into the guide, and means for relieving the carrier from the tension of the spring, substantially as and for the purpose described.

21. In a firearm, a frame formed with a guide, a breech bolt movable in the guide, a spring-pressed member for locking the breech bolt in its forward position, manually operated means for moving the breech bolt, said means also coacting with the locking member for moving the same out of operative position against the action of its spring during the rearward movement of the breech bolt, substantially as and for the purpose specified.

22. In a firearm, a frame formed with a guide, a sliding breech bolt movable in the guide, means for locking the breech bolt in its forward position, operating means for moving the breech bolt and comprising a fore-piece having a rearwardly extending arm connected to the breech bolt by a lost motion connection and provided with a cam for operating the locking means to unlock the bolt, substantially as and for the purpose set forth.

23. In a firearm, a frame formed with a guide, a sliding breech bolt movable in the guide, a spring-pressed pivoted member for locking the breech bolt in its forward position, operating means comprising a fore-piece having a rearwardly extending rigid arm provided with means connected to the breech bolt by lost motion connection, and a cam to unlock the bolt arranged to coact with said member, while the operating means is taking up the lost motion, substantially as and for the purpose described.

24. In a firearm, a frame formed with a guide, firing mechanism comprising a sliding breech bolt movable in the guide and having a firing pin movable therewith, a member for locking the breech bolt in its forward position, a sear located at the rear end of the guide for engaging the firing pin, and means carried by said member for preventing movement of the sear when the breech bolt is in its rear position, substantially as and for the purpose set forth.

25. In a firearm, a frame formed with a guide, a sliding breech bolt movable in the guide and having a firing pin, a sear for coacting with the firing pin, and a spring-pressed member pivoted between its ends, one arm thereof having an angular extension for entering the guide and locking the breech bolt in its forward position, the other

arm of the said member being elevated when the breech bolt is in its rearward position and being provided with means for preventing the movement of the sear downwardly, substantially as and for the purpose described.

26. In a firearm, a frame formed of stock pieces comprising a tube for connection at its front end with the barrel of the firearm, a detachable plug for the rear end of the tube, the plug being formed with a passage, and a sliding breech bolt movable in the tube and extending through the passage of the plug and having means for interlocking with the plug and for normally holding the breech bolt in its closed position, substantially as and for the purpose described.

27. In a firearm, a frame formed of pieces comprising a tube for connection at its front end with the barrel of the firearm, and a detachable closure for the rear end of the tube, the closure being formed with a passage, and a sliding breech bolt movable in the tube and extending into the passage of the closure and having means for interlocking with the closure and for normally holding the breech bolt in its closed position, substantially as and for the purpose set forth.

In testimony whereof, I have hereunto signed my name in the presence of two attesting witnesses, at Syracuse, in the county of Onondaga, in the State of New York, this 7th day of Feb. 1912.

FRANK A. HOLLENBECK.

Witnesses:
L. M. DAVIS,
S. DAVIS.