Nov. 15, 1955 M. L. STACK 2,723,396

BODY MUSCLE SUPPORTER

Filed March 29, 1954

Fig. 1

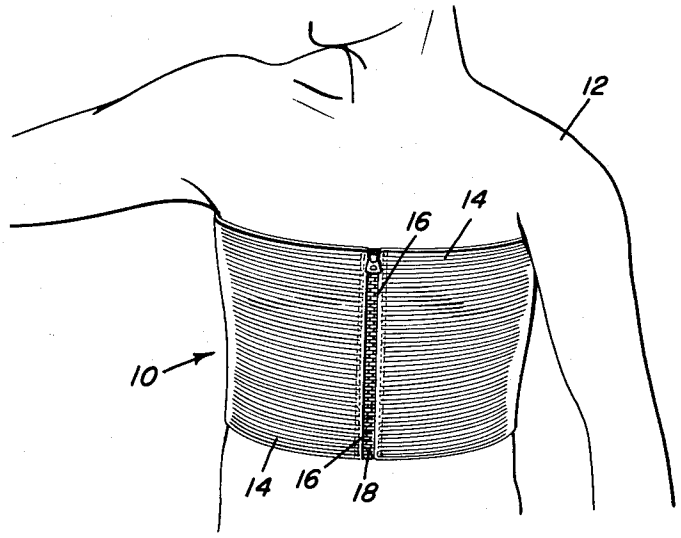

Fig. 3

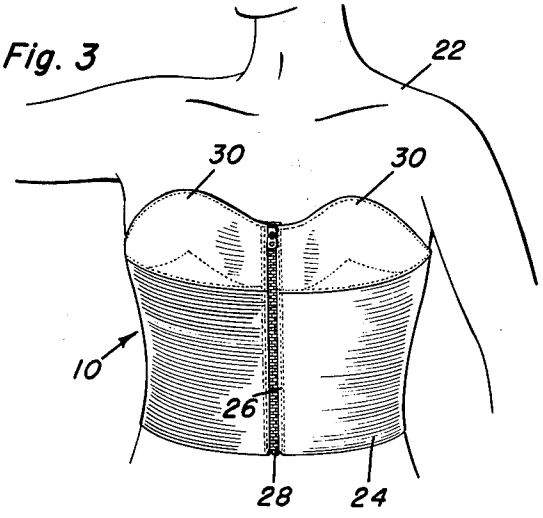

Fig. 2

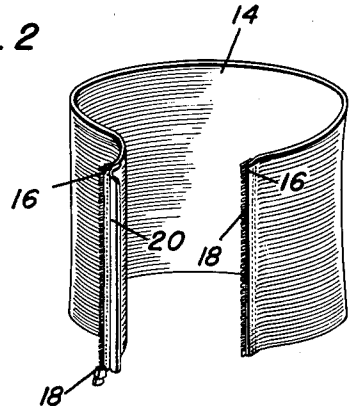

Margaret L. Stack

INVENTOR.

BY Thomas A. O'Brien and Harvey B. Jacobson

Attorneys

United States Patent Office 2,723,396 Patented Nov. 15, 1955

2,723,396

BODY MUSCLE SUPPORTER

Margaret L. Stack, Middletown, N. Y.

Application March 29, 1954, Serial No. 419,319

1 Claim. (Cl. 2—42)

This invention relates to a body muscle supporter in the form of a garment for positioning around a portion of the body thereby supporting the body. This device is especially useful in the support of the chest for assisting in the alleviation of pain in case of fractured ribs, pleurisy or other chest distresses whether they result from injuries or some disease.

An object of this invention is to provide a body muscle supporter of elastic material stretching both longitudinally and transversely for surrounding a portion of a body and assisting in the alleviation of pain to that part of the body.

A further object of this invention is to provide an elastic body muscle supporter which is easily positioned around a portion of the body and which may be easily removed as desired by the wearer.

Yet another object of this invention is to provide a body muscle supporter which is simple in construction, easy to use, relatively inexpensive to manufacture and well adapted for its intended purposes.

These together with other objects and advantages which will become subsequently apparent reside in the details of construction and operation as more fully hereinafter described and claimed, reference being had to the accompanying drawings forming a part hereof, wherein like numerals refer to like parts throughout, and in which:

Figure 1 is a perspective view showing a view of the body muscle supporter of the present invention positioned around the body of a person;

Figure 2 is a perspective view showing the body supporter with the details of the zipper and the closure flap for protecting the body of a wearer; and

Figure 3 is a perspective view similar to Figure 1 showing a modified form of the body muscle support utilized by a female wearer.

Referring now specifically to the drawings, it will be seen that the numeral **10** generally designates the body muscle supporter of the present invention for positioning around a portion of the body of the wearer **12**. As specifically illustrated, the supporter **10** is positioned around the chest of the wearer. The supporter **10** includes a generally elongated rectangular member **14** constructed of elastic material which stretches in a longitudinal and transverse direction. The rectangular member **14** is provided with free end **16** having a slidable zipper closure generally indicated by the numeral **18**. A flap **20** is provided adjacent one of the free ends **16** and bridges the connection between the free ends **16** and protects the body **12** of the wearer from injury due to the zipper **18**.

In operation, the member **14** is positioned around the body **12** and the zipper closure fastener **18** is manipulated in an obvious manner thereby connecting the free ends **16** of the member **14** to each other for forming a supporter for the chest cavity. The particular width and length of the supporter **10** may be determined by the size of the

wearer and may be provided in various standard sizes. Due to the resilient construction of the member **14**, the muscles of the chest cavity will be supported and the pain of fractured ribs or diseases such as pleurisy will be greatly alleviated.

Referring now specifically to Figure 3, it will be seen that the numeral 22 generally indicates the body of a female wearer and the elastic member **24** is provided with free end portions **26** and a closure zipper **28** similar to the device in Figure 2. The body portion **24** of the supporter **10** is provided adjacent its free ends **26** and at its upper edge with a cup member **30** which is similar to a brassiere cup utilized by women. It will be seen that a cup **30** is positioned adjacent each free end **26** of the member **24** and the zipper **28** extends to the vertical upper edge of the cups **30** thereby providing a convenient body support **10** for a female wearer **22**. The operation of the body supporter for the female wearer **22** is exactly the same as for the male wearer **12**.

It will be understood that the supporter **10** may be constructed of any suitable elastic material of a size dependent upon the size of the wearer and the free ends may be connected by any suitable slidable type zipper or hook fasteners or the like. In the case of female wearers, the brassiere attachment formed by the cups **30** may be constructed of any suitable material such as cotton or the like and this prevents the compression of the breasts while wearing the device. Further, the device may be used for support of any part of the body such as the abdomen or the like and may be used to alleviate pain from injuries, various diseases and congestions of the body cavity as well as post-operative support. If desirable, elastic shoulder straps may be attached to the brassiere portion and suitable garter straps may be utilized in the device of Figure 3 for the convenience of the female wearer.

From the foregoing, the construction and operation of the device will be readily understood and further explanation is believed to be unnecessary. However, since numerous modifications and changes will readily occur to those skilled in the art, it is not desired to limit the invention to the exact construction shown and described, and accordingly, all suitable modifications and equivalents may be resorted to, falling within the scope of the appended claim.

What is claimed as new is as follows:

A muscle supporter for the torso of a wearer comprising an elongated rectangular shaped member of highly elastic material for stretching longitudinally and transversely, said member having parallel free ends and parallel upper and lower edges for encircling a portion of the torso of the wearer thereby forming a vertical and horizontal elasticized muscle supporter, a pair of concave members attached to the upper edge of said member adjacent the ends thereof and adapted to receive the breasts of a female wearer, said concave members having free ends in alignment with the free ends of said member, continuous slidable type fastening means detachably connecting the free ends of said rectangular member and said concave members, and a shield flap attached to said rectangular member and one concave member adjacent a free end thereof for underlying the fastening means when the free ends are connected.

References Cited in the file of this patent

UNITED STATES PATENTS

1,948,076	Notes	Nov. 20, 1934
2,180,111	Kapinas	Nov. 14, 1939