Oct. 21, 1941. J. G. SOAVE 2,259,495

SLIDE FASTENER CONSTRUCTION FOR GARMENTS

Filed June 22, 1939 3 Sheets-Sheet 1

Fig. 1.

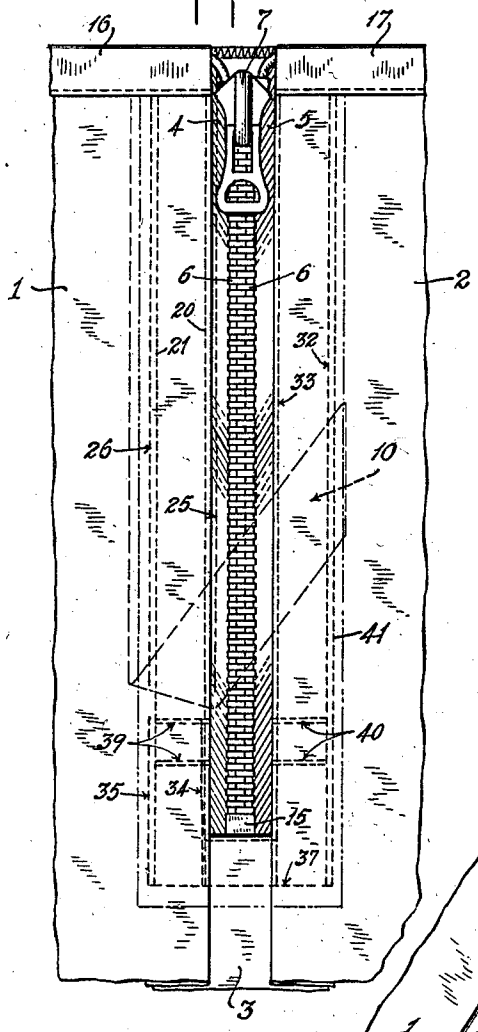

Fig. 2.

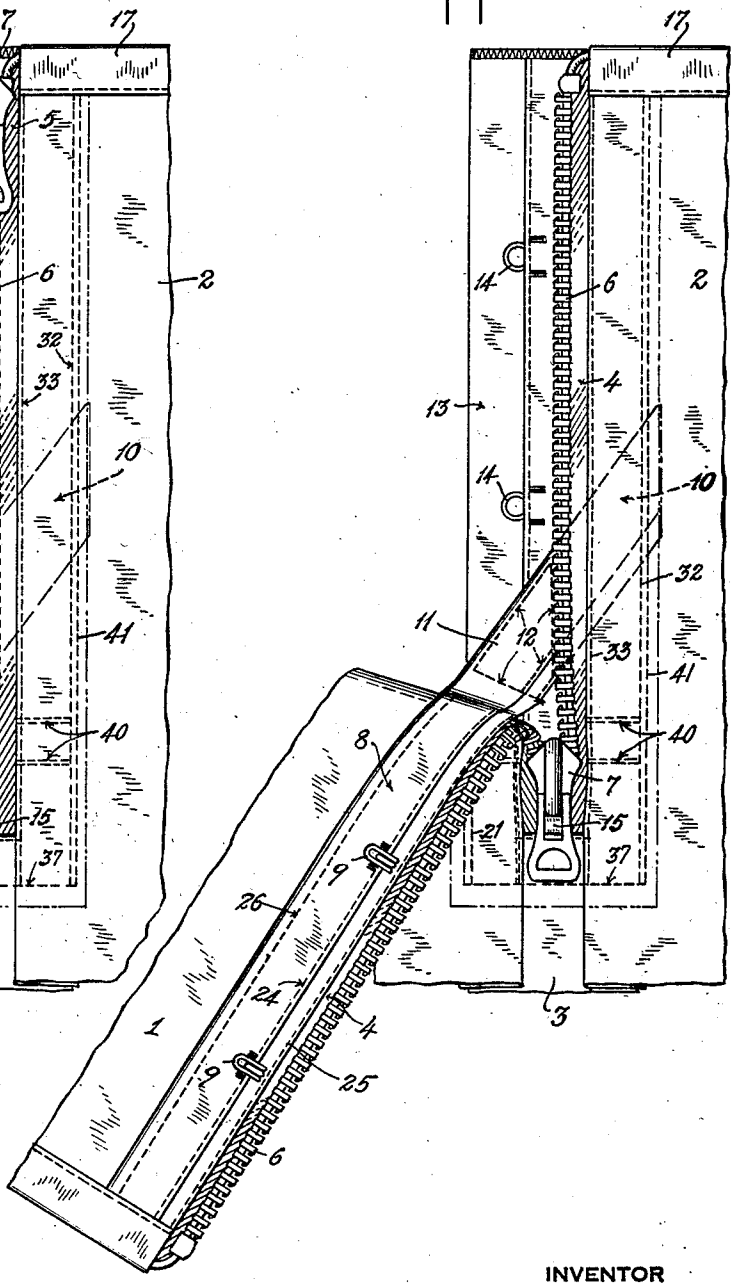

WITNESS
G. V. Rasmussen

INVENTOR
JOHN G. SOAVE
BY
Briesen & Knight,
ATTORNEYS

Oct. 21, 1941. J. G. SOAVE 2,259,495

SLIDE FASTENER CONSTRUCTION FOR GARMENTS

Filed June 22, 1939 3 Sheets-Sheet 2

Fig. 3.

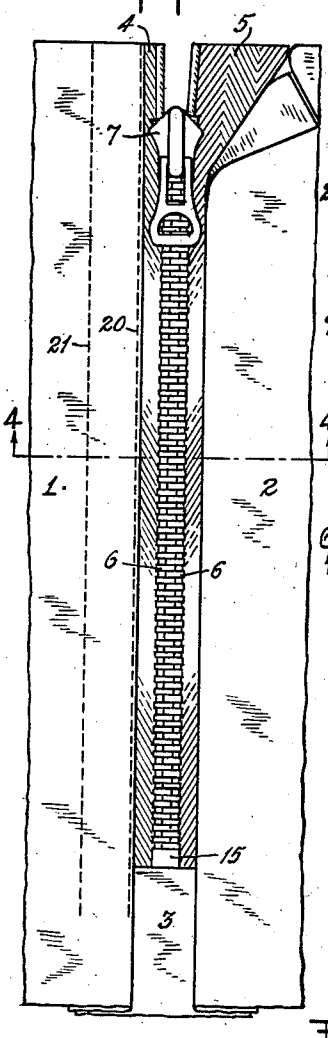

Fig. 5.

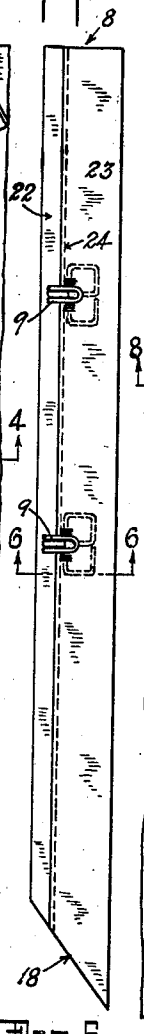

Fig. 7.

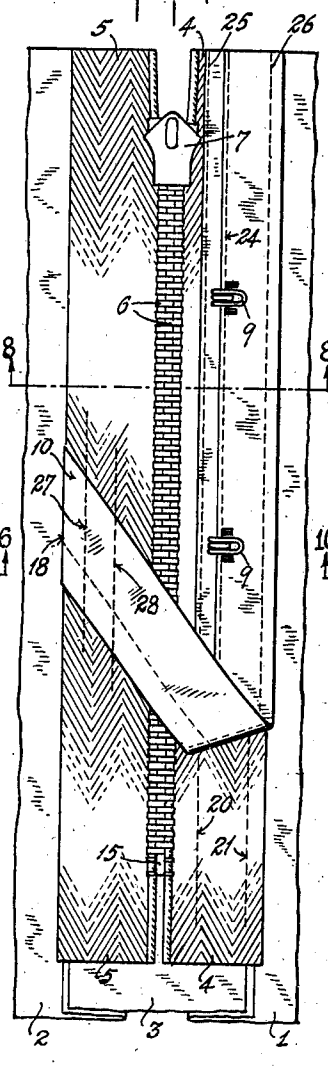

Fig. 9.

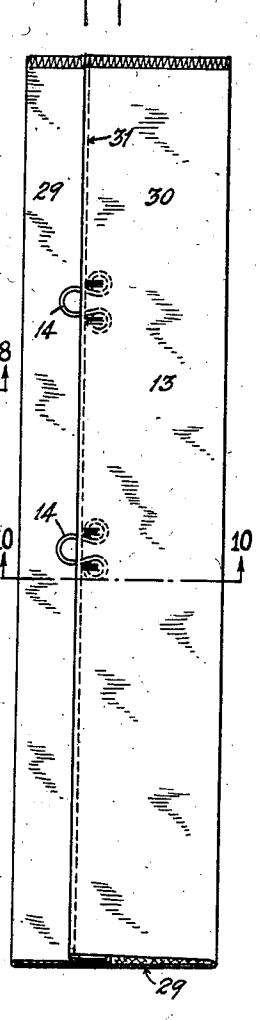

Fig. 6.

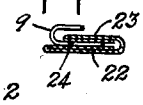

Fig. 10.

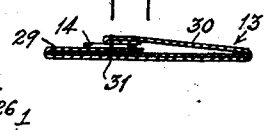

Fig. 4.

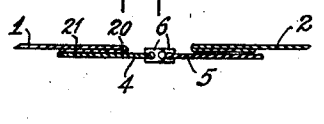

Fig. 8.

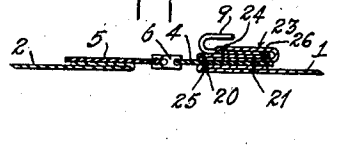

WITNESS

G. V. Rasmussen

INVENTOR

JOHN G. SOAVE

BY

Briesen & Schurck,

ATTORNEYS

Oct. 21, 1941. J. G. SOAVE 2,259,495

SLIDE FASTENER CONSTRUCTION FOR GARMENTS

Filed June 22, 1939 3 Sheets-Sheet 3

Fig. 11.

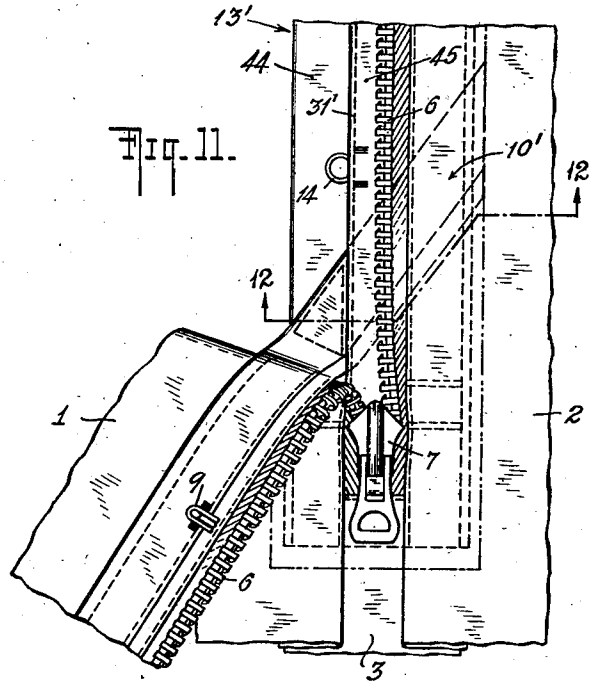

Fig. 12.

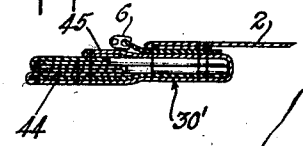

Fig. 13.

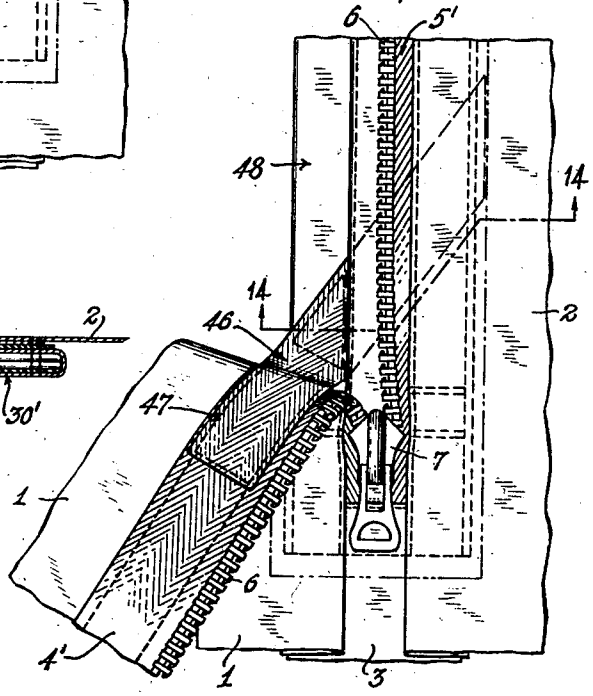

Fig. 14.



WITNESS

G. V. Rasmussen

INVENTOR

JOHN G. SOAVE

BY

Briesen & Rhenk,

ATTORNEYS

Patented Oct. 21, 1941 2,259,495

UNITED STATES PATENT OFFICE

2,259,495

SLIDE FASTENER CONSTRUCTION FOR GARMENTS

John Giovanni Soave, Long Island City, N. Y., assignor to Waldes Koh-I-Noor, Inc., New York, N. Y., a corporation of New York

Application June 22, 1939, Serial No. 280,534

7 Claims. (Cl. 2—38)

This invention relates to garments such as corsets and the like which have an opening extending from one edge to an intermediate portion thereof. A garment of this type is usually slipped on and off the body and since the garment is not completely separated, it is subjected to high stresses in the region of the opening during such operations. This is particularly true of garments which are designed to snugly embrace the body either for the purposes of support or appearance, as in the case of corsets, as the snugness with which the garment encircles the body aggravates the stresses to which the garment is subjected in slipping it on and off the body and are so high that the garment is frequently ripped or torn or otherwise damaged at the closed end of the opening. When the opening of such a garment is provided with a slide fastener structure, it has been found that the stresses thus placed on the garment are likely to either rip the fastener structure from the garment material or cause breakage of the fastener structure in one way or another if the stresses are not taken up in some manner so as to lessen their effect on the fastener structure. Manufacturers have endeavored to solve the problem by reenforcing the garment material and/or the fastener structure in various ways. For example, it has been proposed to apply a short strap of material across the fastener structure just above the bottom stop of the fastener, the ends of such material being stitched to the stringer tapes of the fastener. The disadvantages of this construction, however, were that it was likely to rip off since the areas which could be stitched to the stringers were relatively small and that the pressure of the body on the inner side of the fastener structure tended to press the strap against the slider and obstruct its movements in opening the fastener. Another method suggested was to sew a straight or zigzag stitch line through one of the stringer tapes and a protective flap underlying the fastener, just above the slider in its open position. While this construction was of some help, the area covered by the stitches was comparatively small and the stitches concentrated at that particular area where they had to take the entire brunt of the stresses on the garment were unable to withstand such stresses and if enough stitches were applied to counteract the stresses, the backing became so weakened that it was likely to rip off. Other methods were devised by the art in an effort to solve this problem but so far none have resulted in a construction which would satisfactorily protect the garment and slide fastener structure against the stresses which the type of garment with which this invention is particularly interested is subjected.

It is the purpose of this invention to provide a new and improved slide fastener construction which will be free of the objections above indicated, which will prevent any damage to the parts of which the fastener structure is constituted in taking off or putting on the garment and will satisfactorily absorb and take up the stresses applied to the garment during such operations.

Another object of the invention is to provide a slide fastener construction in which the slider can be readily operated either in the closing or opening direction when such structure is applied to tight fitting garments such as corsets.

The above objects are attained preferably by incorporating a hook and eye tape in the fastener structure so that the lower end of the hook tape extends from one stringer of the fastener at a suitable point above the slider when the latter is in its lowermost position, diagonally upwards across the fastener structure and is permanently secured intermediate the other stringer of the fastener and the eye tape.

A better understanding of the invention will be obtained from the following description read in connection with the accompanying drawings in which Fig. 1 is a front elevational view of a portion of a garment provided with the fastener construction of this invention; Fig. 2 is a similar view of the parts illustrated in Fig. 1 with the slide fastener structure opened to enable the garment to be slipped on or removed from the body of the user; Fig. 3 is a front elevational view of a portion of the garment and the slide fastener structure illustrating an initial step in the manufacture of the construction shown in Figs. 1 and 2; Fig. 4 is a sectional view taken along the line 4—4 of Fig. 3; Fig. 5 is a rear view of the hook tape utilized in the construction of this invention; Fig. 6 is a sectional view taken along the line 6—6 of Fig. 5; Fig. 7 is a rear elevational view illustrating another step in the manufacture of this construction; Fig. 8 is a section taken along the line 8—8 of Fig. 7; Fig. 9 is a front view of the eye tape incorporated in the fastener construction; Fig. 10 is a sectional view taken along the line 10—10 of Fig. 9; Fig. 11 is a fragmentary front view of a construction embodying a modified form of the invention; Fig. 12 is a sectional view taken along the line 12—12 of Fig. 11; Fig. 13 is a fragmentary

front view of a construction embodying still another form of the invention and Fig. 14 is a sectional view taken along the line 14—14 of Fig. 13.

In the drawings the reference numerals 1 and 2 designate the sections of garment material which are folded under along their opposed edges to form the side edges of the opening of the garment. The opening extends from an edge of the garment and is closed at an intermediate portion of the garment by a section of material 3 whose upper end is folded under to provide an underlying flap. The three sections of material are secured together by two spaced lines of stitches (not shown) which extend from the closed end of the opening downwardly along the folded edges of the garment sections 1 and 2. This manner of forming an opening in a garment is one of the conventional methods employed by garment manufacturers in the making of corsets, etc. The opening is closed by a slide fastener structure comprising a stringer tape 4 secured by stitches to the garment sections 1 and 3 and a stringer tape 5 secured by stitches to the garment sections 2 and 3. As is customary, the opposed edges of the stringer tapes 4 and 5 are provided with rows of fastener elements 6 arranged to be manipulated into interlocked or open position by means of a slider 7 in a manner which is well understood in the art. Underlying the stringer tape 4 and being permanently secured thereto is a hook tape 8 provided with a plurality of spaced hooks 9, the lower one of which is spaced at a predetermined point above the slider 7 when the latter is in its lowermost or fully opened position, as is shown in Fig. 2. The hook tape 8 is secured to the stringer tape 4 from the edge of the garment to a point intermediate the lowermost or fully opened position of the slider and the lowermost hook 9 as is illustrated in Figs. 1 and 2 of the drawings, whereupon it is folded diagonally upwards across the rows of elements 6 of the fastener structure and is secured at its end 10 to the stringer tape 5. The intermediate portion 11 of the hook tape is secured to an eye tape 13 by means of a plurality of stitches 12 as is more clearly illustrated in Fig. 2 of the drawings. The eye tape 13 which is provided with a plurality of eyes 14 arranged to be interlocked with the hooks 9 on the hook tape 5, underlies the stringer tapes 4 and 5 to form a backing and is secured to the stringer tape 5 throughout its entire length. The eye tape 13 is also secured to the lower end portion of the stringer tape 4 in the region of the bottom stop 15 of the fastener structure and below the fold of the hook tape 8. At the outer end of the opening formed between the garment sections 1 and 2, the thickened edges of the stringer tapes 4 and 5 are spread outwardly and the outer edges of the several tapes and garment sections 1 and 2 are covered by means of the sections 16 and 17 of binding material.

In producing the above described construction, the slide fastener structure is placed on the sewing machine which is preferably of the two-needle type, with the bottom stop 15 adjacent to the needles and the front side up. The garment is then placed on top of the fastener structure so that the garment sections 1, 2 and 3 overlie the stringer tapes 4 and 5 as is shown in Fig. 3, and both the garment and fastener structure are fed to the sewing machine to apply two rows of parallel stitches 20 and 21 through the material of the stringer tape 4 and the garment sections 1 and 3. The rows of stitches 20 and 21, as is shown in Fig. 3, extend from below the bottom stop 15 of the fastener structure to the outer edge of the garment and unite the entire length of the stringer tape 4 to the garment section 1 and the garment section 3. In the next operation, the hook tape 8 is secured to the stringer tape 4. The hook tape 8 is formed from a single strip of material which has first been folded lengthwise to provide a folded edge portion 22, then folded lengthwise around the longitudinal edge of the folded portion 22 to provide a folded portion 23, the latter of which is again folded under along its edge portion so that its free longitudinal edge overlies the edge of the folded portion 22. The several portions of the strip are then secured together by a line of stitches 24 which also secures to such strip the hooks 9 whose root portions are disposed intermediate the folded portions 22 and 23 of the strip. The lower end 10 of the hook tape is then cut so that its edge 18 is disposed at a predetermined angle to the longitudinal length of the tape for a purpose which will hereinafter be made more clear.

In securing the hook tape 8 to the garment, the latter is turned upside down with the stringer tapes on top and the hook tape placed on the stringer tape 4 with the hooks 9 extending toward the opening of the garment. The hook tape 8 is then secured in position by two rows of stitches 25 and 26, such stitches penetrating the stringer tape 4 and the garment section 1 from the edge of the garment to a point spaced above the bottom stop 15 of the fastener structure so that the lower end of the hook tape is unattached to the stringer tape 4, as is illustrated more clearly in Fig. 7 of the drawings. The hook tape is then folded diagonally so that the free end 10 thereof extends upwardly at an angle to the slide fastener construction with its lower edge 18 flush with the outer edge of the stringer tape 5. The free end 10 of the hook tape is in this folded position then secured to the stringer tape 5 by means of two longitudinally extending lines of stitches 27 and 28.

In the next operations the eye tape or backing 13 is incorporated in the structure. The eye tape 13 comprises a strip 29 of filler material around which the longitudinal edge portions of a covering strip 30 have been folded in overlapping relation, the free edge of the overlapping edge portion being again folded under to present an outer folded edge, as is shown in Figs. 9 and 10. The several portions of the covering strip 30 and the filler strip 29 are secured together by a line of stitches 31 which extend along the folded edge of the overlapping edge portion of the covering strip. The eyes 14, as will be observed in Fig. 9 of the drawings, are disposed intermediate the overlapping edge portions of the covering strip 30 and are secured in position by means of the line of stitches 31 and additional transverse stitches extending through the looped ends of the root portions of such eyes. In securing the eye tape 13 to the fastener structure, the eyes thereof are first interengaged in proper relation with the hooks 9 of the hook tape 8 and with the hook and eye tapes thus interlocked, two lines of stitches 32 and 33 are made to secure the eye tape 13 to the stringer tape 5 and the garment sections 2 and 3. The lines of stitches 32 and 33 extend in parallelism with the opening in the garment from the lower end of the stringer tape

5 to the outer edge of the garment, as will be apparent from Figs. 1 and 2 of the drawings. The eye tape 13 is also secured to the stringer tape 4 and the garment sections 1 and 3 by a pair of parallel longitudinally extending lines of stitches 34 and 35 which extend from the fold of the hook tape 8 down to the bottom end of the stringer tape 4. Transverse lines of stitches 36 and 37 are also applied to permanently unite the bottom ends of all the tapes with the exception, of course, of the upturned end 10 of the hook tape 8. The sewing of the several lines of stitches 32, 33, 34, 35, 36 and 37 may be done most conveniently when the garment is front side up as is shown in Fig. 1 of the drawings. Additional lines 39 of transverse stitches may be applied to the structure below the fold of the hook tape 8 to strengthen the connection between the stringer tape 4 and the garment section 1 in such region. Additional transverse lines of stitches 40 may be applied also below the end 10 of the hook tape and in line with the transverse lines of stitches 39 to strengthen the connection between the stringer tape 5 and the eye tape or backing 13 in such region. An additional line of stitches 41 may also be applied adjacent to the longitudinally extending line of stitches 32, the stitches penetrating the garment sections 2 and 3, stringer tape 5, eye tape 13 and the end 10 of the hook tape 8 to further strengthen the connection of these parts and to provide for a balanced appearance with respect to the applied lines of stitches.

The fastener structure is then opened by sliding the slider 7 down until it engages with its bottom stop 15. The hooks 9 and eyes 14 are also opened and the garment folded on one side, as is illustrated in Fig. 2 of the drawings. In this position of the parts, the garment is then brought under the sewing needle and the substantially quadrangularly shaped line of stitches 12 is applied to the hook tape 8 and the eye tape or backing 13, as is shown in said Fig. 2. A single needle sewing machine is best suited for this operation which secures to the eye tape 13 the intermediate portion 11 of the hook tape 8 which would otherwise obstruct the operation of the slider. This additional stitching also serves to further strengthen the connection of the hook tape 8 with the garment section 2, the stringer tape 5 and eye tape 13. The binding sections 16 and 17 may then be applied to the outer edges of the garment sections 1 and 2 by the transverse lines of stitches 42 and 43.

It will be evident from the foregoing that when a garment embodying the above described construction is slipped onto the body, with the fastener structure entirely open, the stresses which would normally tend to sharply bend the stringer tape 4 at the upper edge of the slider are resisted by the hook tape 8 which through its connection with the garment section 1 and stringer tape 4, the eye tape 13, the stringer tape 5 and the garment section 2, functions to transmit such stresses uniformly over the surfaces of these parts of the garment so that no one portion of the garment and the slide fastener structure will be subjected to all of the forces exerted on the construction as has heretofore been the case. The weakest point of the garment and fastener structure is thus protected against any damage resulting from the stresses raised in trying to slip the garment into position on the body. When the garment is in position on the body, the hooks 9 of the took tape are interengaged with the eyes 14 of the eye tape thereby so positioning the stringer tapes 4 and 5 and the interlocking elements carried thereby with relation to each other that the slider may be readily operated to close the fastener structure and to open the same. When the garment is being removed from the body the hook and eye tapes are first disengaged thereby enabling the stringer tapes 4 and 5 to be separated so that the garment can be slipped off, the reenforcing construction of the hook tape 8 preventing any damage to the fastener structure during such removal by distributing the stresses over a relatively large area of surface of the garment and away from the sections of the garment which would be subjected ordinarily to such stresses. By positioning the fold of the hook tape just above the slide fastener so that the intermediate portion 11 of the hook tape extends across the elements just above the slider in the direction of the stresses applied, sharp bends in the stringer tape 4 will be prevented while at the same time allowing the stringers to be separated to the maximum extent necessary for removal of the garment. Furthermore by placing the lowermost hook and eye on their respective tapes so that they interengage just above the intersection of the rows of elements with the upper edge of the intermediate portion 11 of the hook tape the movement of the slider over such portion 11 is facilitated and a neater compact arrangement of the structure is attained.

While I have described with particularity the preferred embodiment of this invention, it will be obvious to those skilled in the art that various changes and modifications may be made without departing from the spirit and scope of my invention. For example, instead of positioning the lower end 10 of the hook tape 8 between the stringer tape 5 and the eye tape 13 as has been disclosed, such end of the hook tape may be positioned intermediate the overlapping folded portions of the eye tape. This construction is illustrated in Figs. 11 and 12 of the drawings in which the numerals 44 and 45 designate the overlapping edge portions or flaps of the covering strip 30' of the eye tape or backing 13' and the numeral 10' designates the end of the upturned portion of the hook tape which enters between the flaps at the folded edge of the flap 45. By thus positioning the lower end of the hook tape an additional strengthening means is obtained by the line of stitches 31' and a neat compact structure is obtained. So also in short lengths of slide fasteners where no hooks and eyes are required, the hook tape may be dispensed with, as is shown in Fig. 13, and the stringer tapes strengthened above the lowermost position of the slider by means of a separate piece of tape 46 which may be secured to a large area of the stringer tape 4' by means of stitches 47 and at its other end to the stringer tape 5' and a backing strip 48. In this embodiment of the invention, the backing strip 48 may be constructed in a manner similar to the eye tape 13 above described to provide two folded overlapping flap portions which enclose a strip of filler material. The end of the reenforcing strip 46 may be either inserted between the overlapping flaps of the backing 48, as is illustrated in Figs. 13 and 14 or secured intermediate the backing strip and the stringer tape 5' in the manner shown and described with respect to the embodiment illustrated in Figs. 1 to 10 of the drawings. The stitches for secur-

ing the intermediate portions of strengthening tape 46 or the hook tape to the backing or eye tape may be triangularly shaped, as is illustrated in Figs. 11 and 13 of the drawings, or may be in any other form just so the intermediate portion of the took tape or strengthening tape is securely fastened to the backing or eye tape to strengthen the construction and to make sure that the hook or strengthening tape does not interfere with the operations of the slider.

I claim:

1. In combination, a slide fastener comprising a pair of stringer tapes provided with interlocking fastening means along their opposed edges, a slider on said fastening means for opening and closing the same, means permanently connecting the lower ends of said stringer tapes and serving as a stop for the slider when the latter is moved to the fully opened condition of the fastener to permit one of the stringer tapes to bend at the upper end of the slider and away from the other stringer tape, a backing member underlying said stringer tapes in their closed position, a flexible elongated member permanently secured to said bendable stringer tape and extending downwardly on the underside of such tape in the latter's closed position to a point located near to and above the slider when the latter is at the bottom end of the fastener, said member at such point being folded to extend diagonally upward across the underside of said fastening means and the other stringer tape, means permanently securing the diagonally extending portion of said flexible member to said backing member and said other stringer tape within the area of the latter and securing means located adjacently above the fold of said member in the closed condition of the fastener and securing the diagonally extending portion of said member to said backing member, the diagonally extending portion of said flexible member being so disposed with relation to said tapes that when said bendable stringer tape is bent away from the other stringer tape under transverse stresses in the fully opened position of the slider, said flexible member is extended to its full length and equally distributes throughout its entire area the transverse stresses exerted on the fastener in such region thereby reducing to a minimum the strains on said securing means, and said securing means transmitting the uniformly distributed stresses acting on said flexible member to both of said stringer tapes and said backing member whereby all portions of the structure cooperate to absorb the transverse stresses acting on such structure and no portion of the structure less than the whole will be subjected to all of such stresses.

2. In combination, a slide fastener comprising a pair of stringer tapes provided with interlocking fastening means along their opposed edges, a slider on said fastening means for opening and closing the same, means permanently connecting the lower ends of said stringer tapes and serving as a stop for the slider when the latter is moved to the fully opened condition of the fastener to permit one of the stringer tapes to bend at the upper end of the slider and away from the other stringer tape, a backing member underlying said stringer tapes in their closed position, means securing a longitudinal edge portion of said backing member throughout its entire length to the other of said stringer tapes, a flexible elongated member positioned intermediate said bendable stringer tape and the free longitudinal edge portion of said backing member, said flexible member being folded intermediate its ends at a point located near to and above the slider when the latter is at the bottom end of the fastener and having a portion extending longitudinally of said bendable stringer tape and a portion extending diagonally across the free longitudinal edge portion of said backing member, and securing means permanently attaching such portions of the flexible member to said other stringer tape and the free edge portion of said backing member, respectively, the diagonally extending portion of said flexible member being so disposed with relation to said tapes that when said bendable stringer tape is bent away from the other stringer tape under transverse stresses in the fully opened position of the slider, said flexible member is extended to its full length and equally distributes throughout its entire area the transverse stresses exerted on the fastener in such region thereby reducing to a minimum the strains on said securing means, and said securing means transmitting the uniformly distributed stresses acting on said flexible member to both of said stringer tapes and said backing member whereby all portions of the structure cooperate to absorb the transverse stresses acting on such structure and no portion of the structure less than the whole will be subjected to all of such stresses.

3. In combination, a slide fastener comprising a pair of stringer tapes provided with interlocking fastening means along their opposed edges, a slider on said fastening means for opening and closing the same, means permanently connecting the lower ends of said stringer tapes and serving as a stop for the slider when the latter is moved to the fully opened condition of the fastener to permit one of the stringer tapes to bend at the upper end of the slider and away from the other stringer tape, a flexible elongated member permanently secured to said bendable stringer tape and extending downwardly on the underside of such tape in the latter's closed position to a point located near to and above the slider when the latter is at the bottom end of the fastener, said member at such point being folded to extend diagonally upward across the underside of said fastening means to directly underlie the other stringer tape, means permanently securing the diagonally extending portion of said flexible member to said other stringer tape, a backing member underlying said stringer tapes in their closed position and said folded flexible member, means securing a longitudinal edge portion of said backing member throughout its entire length to said other stringer tape, said securing means penetrating the diagonally extending portion of said flexible member to unite it with said edge portion of said backing member and said other stringer tape, and securing means located adjacently above the fold of said flexible member in the closed position of the fastener and securing the diagonally extending portion of said member to the free longitudinal edge portion of said backing member, the diagonally extending portion of said flexible member being so disposed with relation to said tapes that when said bendable stringer tape is bent way from the other stringer tape under transverse stresses in the fully opened position of the slider, said flexible member is extended to its full length and equally distributes throughout its entire area the transverse stresses exerted on the fastener in such region thereby reducing to a minimum the strains on said securing means, and said securing means transmitting the uniformly distributed stresses acting on said

flexible member to both of said stringer tapes and said backing member whereby all portions of the structure cooperate to absorb the transverse stresses acting on such structure and no portion of the structure less than the whole will be subjected to all of such stresses.

4. The combination defined in claim 1, in which said backing member comprises a strip of material folded to provide overlapping flaps and said diagonally extending portion of said flexible member is disposed intermediate said flaps.

5. In combination with a garment having an opening extending from one edge to an intermediate portion thereof, a slide fastener for closing the opening comprising tape stringers secured to the garment material along the edges of the opening, interlocking fastening means on the edges of said tapes, a slider on said fastening means for opening and closing the same, means permanently connecting the lower ends of said stringer tapes and serving as a stop for the slider when the latter is moved to the fully opened condition of the fastener to permit one of the stringer tapes to bend at the upper end of the slider and away from the other stringer tape, a flexible elongated member permanently united to said bendable stringer tape and the garment material to which said tape is secured, said member entirely underlying said bendable stringer tape and extending from the upper end portion thereof downwardly on the underside of such tape in the latter's closed position to a point located near to and above the slider when the latter is at the bottom end of the fastener, said member at such point being folded to extend diagonally upward across the underside of said fastening means to underlie the other stringer tape, a backing member underlying said stringer tapes in their closed position, means securing one longitudinal edge portion of said backing member throughout its entire length to said other stringer tape, said securing means penetrating the diagonally extending portion of said flexible member to unite it with said edge portion of the backing member and said other stringer tape, securing means located below the fold of said flexible member and uniting the other longitudinal edge portion of said backing member to said first-mentioned bendable stringer tape and the garment material and securing means located adjacently above the fold of said flexible member in the closed position of the fastener and securing the diagonally extending portion of said flexible member to the free section of said other longitudinal edge portion of said backing member, the diagonally extending portion of said flexible member being so disposed with relation to said tapes that when said bendable stringer tape is bent away from the other stringer tape under transverse stresses in the fully opened position of the slider, said flexible member is extended to its full length and equally distributes throughout its entire area the transverse stresses exerted on the fastener in such region thereby reducing to a minimum the strains on said securing means, and said securing means transmitting the uniformly distributed stresses acting on said flexible member to both of said stringer tapes and said backing member whereby all portions of the structure cooperate to absorb the transverse stresses acting on such structure and no portion of the structure less than the whole will be subjected to all of such stresses.

6. In combination, a slide fastener comprising a pair of stringer tapes provided with interlocking fastening means along their opposed edges, a slider on said fastening means for opening and closing the same, a hook tape provided with a plurality of spaced hooks permanently secured to one of said stringer tapes and extending downwardly on the underside of such stringer tapes in the latter's closed position to a point located near to and above the slider when the latter is at the bottom end of the fastener, said hook tape at such point being folded to extend diagonally upward across the underside of said fastening means to underlie the other stringer tape, an eye tape underlying said stringer tapes in their closed position and being provided with a plurality of eyes adapted to be interlocked with the hooks on said hook tape, means securing one longitudinal edge portion of said eye tape throughout its entire length to said other stringer tape, said securing means penetrating the diagonally extending portion of said hook tape to unite it with said edge portion of the eye tape and said other stringer tape, and securing means located adjacently above the fold of said hook tape in the closed position of the fastener and securing the diagonally extending portion of said hook tape to the other longitudinal edge portion of said eye tape.

7. The combination defined in claim 6, in which the lowermost hook of said hook tape and the cooperating eye of said eye tape are located adjacently above the diagonally extending portion of said hook tape in the closed position of the fastener.

JOHN GIOVANNI SOAVE.