Nov. 17, 1942. K. BERNHARDT 2,302,518

DEVICE FOR DRAWING OFF WELTS

Filed May 31, 1939 3 Sheets-Sheet 1

Fig. 1

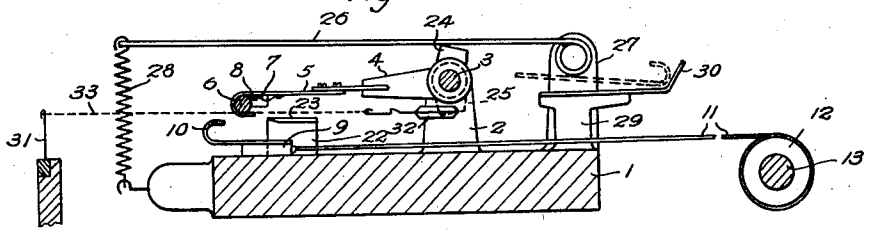

Fig. 2

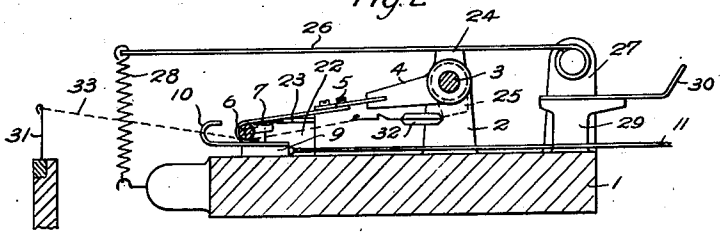

Fig. 3

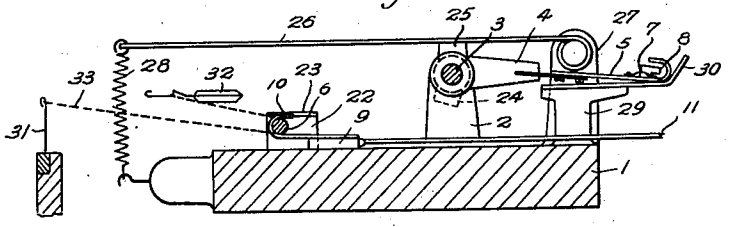

Fig. 5

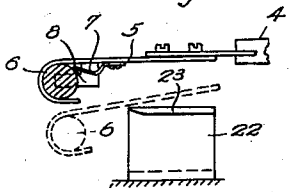

Fig. 6

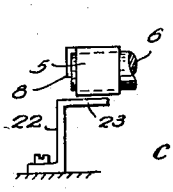

Fig. 7

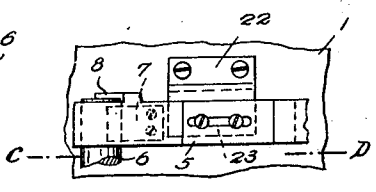

Inventor:
KURT BERNHARDT
By William C Linton
ATTORNEY

Nov. 17, 1942. K. BERNHARDT 2,302,518

DEVICE FOR DRAWING OFF WELTS

Filed May 31, 1939 3 Sheets-Sheet 2

Fig. 4

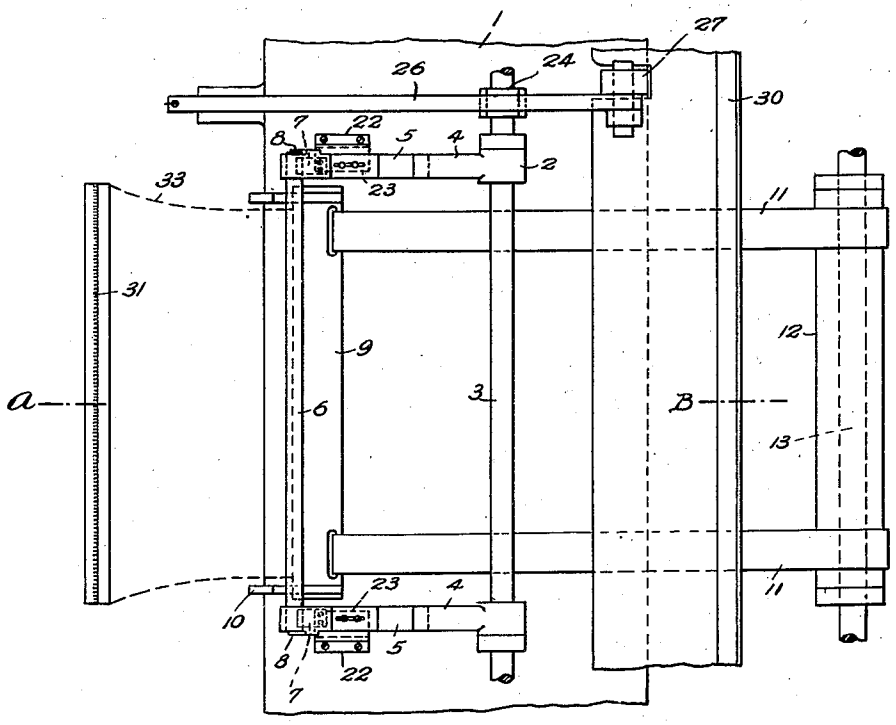

Inventor:
KURT BERNHARDT

By William C. Linton
ATTORNEY

Nov. 17, 1942. K. BERNHARDT 2,302,518

DEVICE FOR DRAWING OFF WELTS

Filed May 31, 1939 3 Sheets-Sheet 3

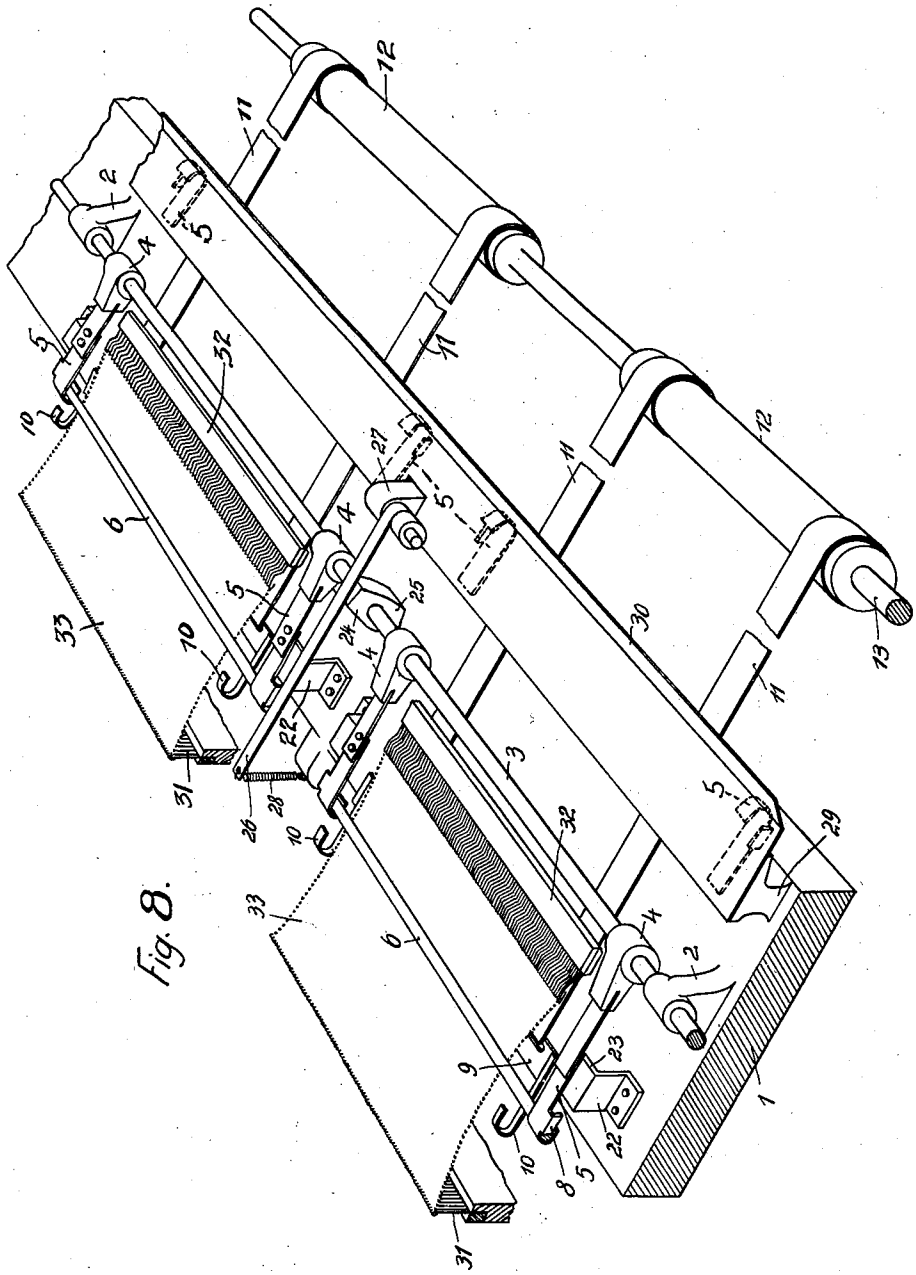

Fig. 8.

Inventor:
Kurt Bernhardt
By William C. Linton
Atty.

Patented Nov. 17, 1942 2,302,518

UNITED STATES PATENT OFFICE

2,302,518

DEVICE FOR DRAWING OFF WELTS

Kurt Bernhardt, Chemnitz-Erfenschlag, Germany; vested in the Alien Property Custodian

Application May 31, 1939, Serial No. 276,709
In Germany May 31, 1938

5 Claims. (Cl. 66—96)

The present invention relates to flat knitting machines and more particularly refers to a device for drawing off the welts of stockings produced upon such machines.

Hitherto after the transfer of the welts which may be effected either separately by hand for each division or commonly for all divisions automatically, the welt bars required for drawing off the welts have been successively connected to the draw off elements which besides causing loss of time by the interruption of the operation of the machine required for carrying out said connecting operation.

The object of the present invention is to obviate these draw-backs and this aim is obtained in accordance with the invention by the fact that a shaft extending over the entire length of the machine is journalled upon the work table above the fabric produced and hook shaped holders are provided on this shaft at the ends of each division in which hooks the welt rods are inserted preferably before beginning the manufacture of stockings and in any case immediately after starting the production of the welt. During the manufacture of the welts of stockings produced later on, the holders are commonly swung inwardly, whereby the welt rods are put upon the fabric. Under the action of a tension spring said welt rods press upon the welts, until they are commonly grasped by receiving or take up members of the drawing off device, pressed out of the holders, kept depressed by guide bars and further advanced.

In the accompanying drawings a device according to the invention is shown by way of example.

In these drawings:

Figs. 1 to 3 show longitudinal sections of the drawing off device on the line A—B of Fig. 4 in various operative positions,

Fig. 4 is a plan view of a device according to the invention,

Fig. 5 is a side detail view partially in section of a hook shaped member, a bracket for supporting the same and a guide in accordance with the present invention.

Fig. 6 is an end view of Fig. 5, and

Fig. 7 is a top view of the construction shown in Fig. 6.

Figure 8 is a detail perspective view partly in section of two divisions of a flat knitting machine having my invention applied thereto.

A shaft 3 extending over the entire length of the machine is rotatably mounted in bearings 2 carried by the work table 1. Secured to the shaft which is arranged above the fabric forming the welts being produced by the machine are the division arms 4 and adjustably connected to each arm 4 by means of the slot and pins connection, as is better shown in Fig. 7 is a hook-shaped holder 5 which latter at times detachably supports a welt rod 6. Fixed to the holders 5 in front of the hook shaped ends are springs 7 for holding the welt rods 6 in the hooks, whereas resilient tongues 8, provided at the sides of the hook shaped ends prevent lateral displacement of the inserted welt rods (Figs. 6 and 7).

Drawing off devices or the like consisting for instance of straps 11 or the like connected to rollers 12 mounted upon a shaft 13 act in known manner upon rails 9 to which are fixed hook shaped take up members 10 for the welt rods.

Fixed upon the work table are guide members 22 for the welt rods. The guide members 22 are provided with enlarged heads 23 (Fig. 6) below which the welt rods 6 slide and are guided thereby (Fig. 3).

Double cams 24, 25 distributed over the entire length of the machine are fixed upon the shaft 3 and in the range of said double cams 24, 25 levers 26 are arranged which are rotatably mounted in brackets 27 (only one of each of the latter being shown in the drawings). The ends of the levers 26 are connected to the work table 1 by tension springs 28. Moreover, protecting plates 30 are fixed upon brackets 29 of the work table 1 which plates enclose the holders 5 occupying the swung out position and prevent pressing outward of the welt rods. The frame needles are designated with 31, the welt bar with 32 and the fabric with 33.

The operation of the drawing off device is as follows:

Before the manufacture of the welts, the holders 5 are swung into the position of rest in which they are located upon the protecting plate 30 and held in this position by the levers 26 pressing upon the cams 25 under the action of the springs 28 (Fig. 3).

Before the foot portions are pressed off, the welt rods 6 are removed from the rolled up leg portions of the stocking and inserted during operation into the holders 5 occupying the position of rest. By the take up springs 7 as well as the resilient tongues 8 the welt rods are held in the hook shaped holders 5 (Fig. 5).

If during the now following manufacture of the welt the welt bar has been advanced a certain distance, all take up or receiving members 10 are, without interrupting the continued manufacture of the welts, shifted into the position for receiving the welt rods, whereas all the holders together with the inserted welt rods are commonly swung into the operative position, the welt rods thereby being put on the fabric 33 (Fig. 1) behind the welt bar 32 but in front of the hook shaped receiving members 10. The levers 26 controlled by the tension springs 28 act upon the cams 24 mounted on the shaft 3 and depress further downwardly the holders 5 carrying the welt rods 6, so that the latter are located between

the receiving or take up members 10 and the guide members 22 (Fig. 2). After the drawing off movement of the welt bar is finished, all the welt rods are commonly and positively connected to the hook shaped receiving members 10 by the draw-off movement of the rails 9. The continued pull of the rails 9 causes the welt rods to be pressed out of the receiving or take up springs 7 of the hook shaped holders 5 and to be held and guided in the depressed position by the enlarged heads 23 of the guide members 22 (Fig. 3).

After all the holders have been swung into the position of rest (Fig. 3) the further manufacture of the legs of the stockings is carried out in known manner.

What I claim is:

1. In a device for drawing off welts produced on a flat knitting machine, comprising in combination a work table, receiving members for drawing off the fabric forming the welts being produced by the machine, a rotatable shaft mounted upon said work table and extending over the fabric being produced by the machine, a double acting cam secured to said shaft, hook-shaped holders carried by said shaft at each end of each division of the machine, a welt rod detachably carried by each pair of holders, means cooperating with said cam for at times causing said welt rod to be moved into engagement with the fabric being produced by the machine, guide members fixed upon said table for depressing and guiding said rod and means for causing said receiving member to engage said welt rod whereby the latter will be released from said holders and caused to pass together with the fabric engaged thereby within said guide members.

2. In a device for drawing off welts produced on a flat knitting machine, comprising in combination a work table, receiving members for drawing off the fabric forming the welts being produced by the machine, a rotatable shaft mounted upon said work table and extending over the fabric being produced by the machine, a double acting cam secured to said shaft, hook-shaped holders carried by said shaft at each end of each division of the machine, a welt rod detachably carried by said holders, receiving springs provided on said holders in front of said hook-shaped ends of the latter, resilient tongues mounted on said holders at the sides of said hook-shaped ends preventing displacement of said welt rod, means cooperating with said cam for at times causing said welt rod to be moved into engagement with the fabric being produced by the machine, guide members for depressing and guiding said rod and means for causing said receiving members to engage said welt rod whereby the latter will be released from said holders and caused to pass together with the fabric engaged thereby below said guide members.

3. In a device for drawing off welts produced on a flat knitting machine, comprising in combination a work table, receiving members for drawing off the fabric forming the welts being produced by the machine, a rotatable shaft mounted upon said work table and extending over the fabric being produced by the machine, a double acting cam secured to said shaft, hook-shaped holders carried by said shaft at each division of the machine, a welt rod detachably carried by each pair of holders, receiving springs provided on said holders in front of said hook-shaped ends of the latter, resilient tongues mounted on said holders at the sides of said hook-shaped ends preventing displacement of the welt rod, guide members for depressing and guiding said rod, protecting members for said welt rod, means cooperating with said cam for retaining said welt rod within said protecting members when in one position and when in another position adapted to cause said welt rod to be moved into engagement with the fabric being produced by the machine, and means for causing said receiving members to engage said welt rod whereby the latter will be released from said holders and caused to pass together with the fabric engaged thereby below said guide members.

4. In a device for drawing off welts produced on a flat knitting machine, comprising in combination a work table, receiving members for drawing off the fabric forming the welts being produced by the machine, a rotatable shaft mounted upon said work table and extending over the fabric being produced by the machine, a double acting cam secured to said shaft, hook-shaped holders carried by said shaft at each end of each division of the machine, a welt rod detachably carried by each pair of holders, receiving springs provided on said holders in front of said hook-shaped ends of the latter, resilient tongues mounted on said holders at the sides of said hook-shaped ends preventing displacement of said welt rod, protecting plates for said welt rod, means cooperating with said cam for retaining said welt rod within said protecting plates when in one position and when in another position adapted to cause said welt rod to be moved into engagement with the fabric being produced by the machine, guide members fixed on said work table, enlarged heads formed with said guide members and means for causing said receiving members to engage said welt rod whereby the latter will be released from said holders and caused to pass together with the fabric engaged thereby below said enlarged heads formed with said guide members.

5. In a device for drawing off welts produced on a flat knitting machine, comprising in combination a work table, receiving members for drawing off the fabric forming the welts being produced by the machine, a rotatable shaft mounted upon said work table and extending over the fabric being produced by the machine, a double acting cam secured to said shaft, hook-shaped holders adjustably connected to said shaft at each end of each division of the machine, a welt rod detachably carried by each pair of holders, protecting plates for said welt rod, a spring actuated lever adapted to cooperate with said cam whereby when the latter is in one position said welt rod will be retained within said protecting plates and when in another position will cause the welt rod to engage the fabric being produced by the machine, guide members for said welt rod, and means for actuating said receiving members whereby said welt rod together with the fabric engaged thereby will be drawn through said guide members and said welt rod detached from said holders.

KURT BERNHARDT.