H. ELBE.

FIRE-ESCAPES.

No. 194,138. Patented Aug. 14, 1877.

Fig. 1

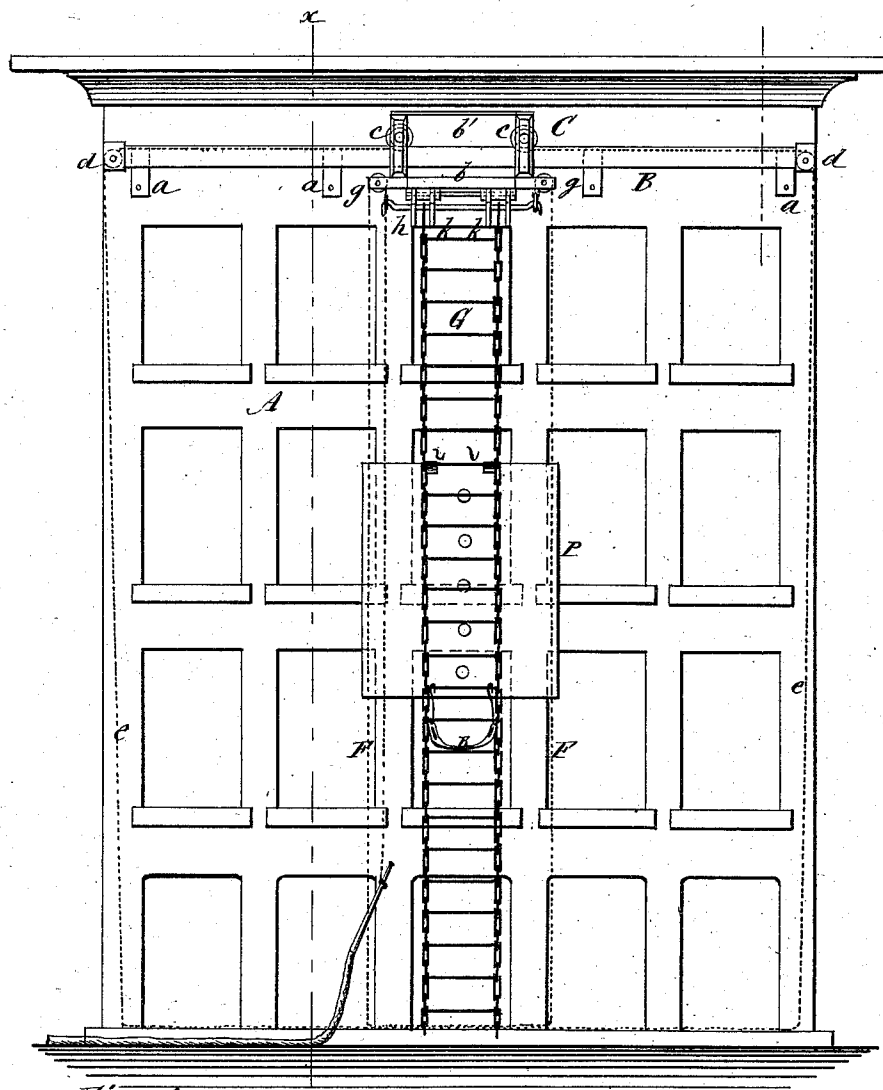

Fig. 2

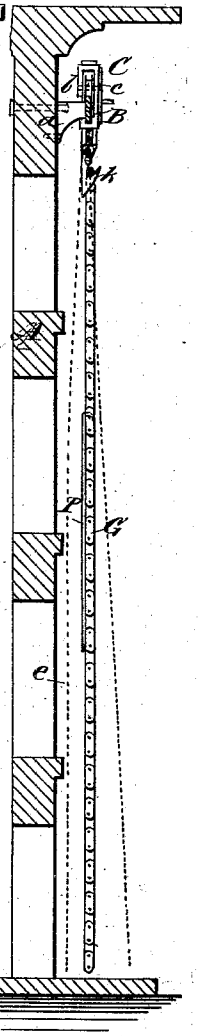

Fig. 5

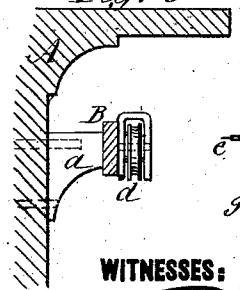

Fig. 3

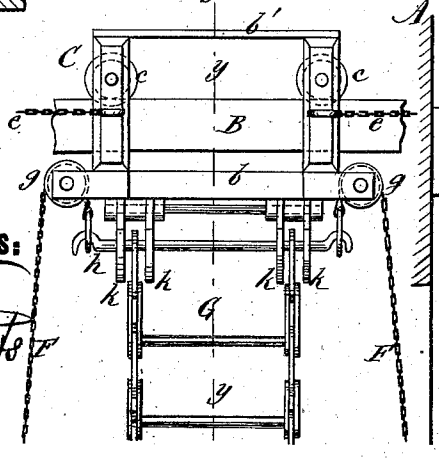

Fig. 4

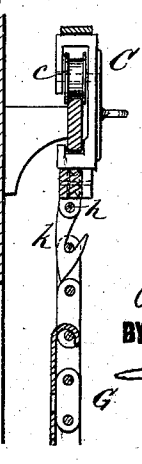

Fig. 6

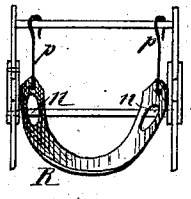

WITNESSES:

C. Nerenz

Alex F. Roberts

INVENTOR:

H. Elbe.

BY Munn & Co

ATTORNEYS.

N. PETERS, PHOTO-LITHOGRAPHER, WASHINGTON, D. C.

UNITED STATES PATENT OFFICE.

HENRY ELBE, OF NIAGARA FALLS, NEW YORK, ASSIGNOR TO HIMSELF AND ADOLPH GOLDSMITH, OF NEW YORK CITY.

IMPROVEMENT IN FIRE-ESCAPES.

Specification forming part of Letters Patent No. **194,138**, dated August 14, 1877; application filed June 25, 1877.

To all whom it may concern:

Be it known that I, HENRY ELBE, of Niagara Falls, in the county of Niagara and State of New York, have invented a new and Improved Fire-Escape, of which the following is a specification:

This invention relates to means for removing persons and furniture from the windows of a building which is on fire.

The invention will first be described in connection with the drawing, and then pointed out in the claim.

In the annexed drawing, Figure 1 is a front elevation of a building, showing my improved fire-escape applied to it. Fig. 2 is a section through Fig. 1, taken in the vertical plane indicated by dotted line *x x*. Fig. 3 is an enlarged view of the truck and upper end of the ladder. Fig. 4 is an enlarged sectional view taken in the plane indicated by dotted lines *y y*, Fig. 3. Fig. 5 shows, in cross-section, one of the pulleys on the ends of the rail. Fig. 6 shows a sling or body-support attached to part of a ladder.

Similar letters of reference indicate corresponding parts.

The letter A designates the wall of a building, and B a rail or track, which is strongly secured thereto by means of brackets *a*, or the equivalents thereof. This rail B is set off a little from the wall, and, if desired, it may be inclosed inside of the cornice or a receptacle especially provided for it.

I shall locate the rail above the windows of the highest story of the building, and, when circumstances will allow, the rail may be continued from one building to another any desired distance.

C designates a car, consisting of a block or frame constructed with two horizontal bars, *b b'*, rigidly held. Inside of the upper ends of the end pieces of the frame C, and protected from the weather as much as possible, are two flanged wheels, *c c*, which roll on the rail B. These wheels *c c* suspend the car freely, and are not liable to bind when it is moved.

At the ends of the rail B are two grooved pulleys, *d d*, over which pass chains *e e*, that are attached to the car C, and connected together at their lower ends. These chains are of sufficient length to be controlled by persons on the sidewalk below, and when they are not in use they should be protected against manipulation by malicious persons by inclosing them in a tube of suitable description. The chains are intended to enable a person to move the car at any desired point on the rail.

At the extremities of the horizontal bar *b* two grooved pulleys, *g g*, are pivoted, over which are passed chains F F, that are attached to hooks formed on a cross-bar, *h*, fixed to the upper end of a ladder, G, and used for raising and lowering this ladder.

Between the two pulleys *g g*, and pivoted to the bar *b*, are a number of hooks, *k*, which are beveled, as shown in Figs. 2 and 4, and otherwise so formed that when the upper end of the ladder is drawn up to them by means of chains F F they will grab the cross-bar *h* and hold the ladder securely.

The ladder G is preferably made of metal, and the side bars of short links pivoted together. This will allow the ladder to be rolled up when not in use.

When the ladder has been suspended from the car, the chains F F may be detached from the cross-bar *h* and used for hauling up hose, and for raising and lowering other objects.

In combination with the apparatus above described I shall use a fender or shield, P, and a sling, R. The fender P is a sheet-metal plate, of suitable size to cover one or more windows, and it is perforated at different points, for allowing the nozzle of a hose-pipe to be inserted through it. The fireman will thus be protected from flame and smoke while playing on the fire. The fender has hooks *l l* on its upper end, by which it can be attached to any of the ladder-rounds.

The sling R is a strip of leather or canvas, of suitable width and length to pass around the body, and this strip is formed with armholes *n n* and hooks *p p*. The sling is applied to the body like a jacket, and the hooks, which may be snap-hooks, afford a ready attachment of the person to the rounds of a ladder.

It will be seen from the above description that whenever necessary the ladder can be quickly run up and attached to the car C, and

moved in front of any window of the building, affording to persons a safe exit therefrom.

Having thus described my invention, I claim as new and desire to secure by Letters Patent—

The combination of rail B, having two grooved pulleys at its ends, and the car C, having bars *b b*, flanged wheels *c c*, and pulleys *g g*, with the chains *e e* F F and ladder G, as shown and described.

HENRY ELBE.

Witnesses:
F. G. HULETT,
GEO. HARGREAVES.