Jan. 16, 1945. R. BECKMAN 2,367,326

ROTARY COMPRESSOR OR MOTOR

Original Filed Oct. 7, 1941

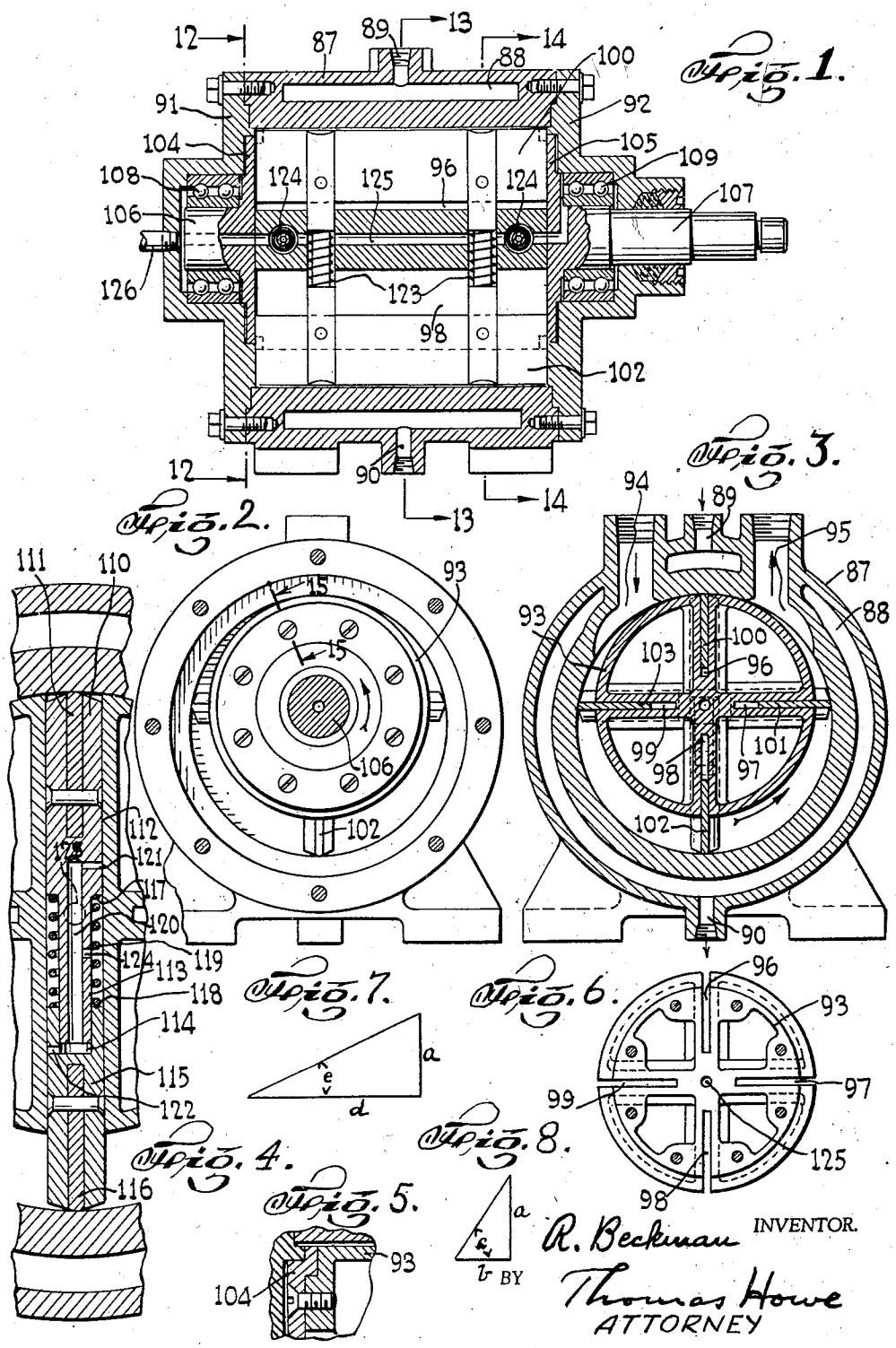

R. Beckman INVENTOR.

BY Thomas Howe

ATTORNEY

Patented Jan. 16, 1945 2,367,326

UNITED STATES PATENT OFFICE

2,367,326

ROTARY COMPRESSOR OR MOTOR

Richard Beckman, New York, N. Y.

Original application October 7, 1941, Serial No. 413,945. Divided and this application November 13, 1942, Serial No. 465,422

2 Claims. (Cl. 230—153)

This invention relates to devices acting as compressors of air or other elastic fluid, which devices are also capable of use as motors when the operation is reversed, namely compressed fluid is supplied thereto and mechanical force taken therefrom.

It is an object of the invention to provide an improved sliding vane rotor for a compressor (or motor).

A further object of the invention is to provide an improved construction and relationship of sliding vanes in the rotor of a compressor (or motor) whereby the wear on the vanes is reduced and their free and proper operation promoted.

Other and ancillary objects of the invention will appear hereinafter.

This application is a division of my prior application Serial No. 413,945, filed October 7, 1941.

In the accompanying drawing which illustrates the invention—

Fig. 1 is an axial section of a single stage compressor embodying the invention;

Fig. 2 is a section on the line 12—12 of Fig. 1;

Fig. 3 is a section on the line 13—13 of Fig. 1;

Fig. 4 is an enlarged section, partly broken away, on the line 14—14 of Fig. 1;

Fig. 5 is an enlarged, fragmentary section on the line 15—15 of Fig. 2;

Fig. 6 is an end elevation of the rotor body of the apparatus of Figs. 1 to 4;

Fig. 7 is a vector diagram showing the direction of the pressure component of the blade structures against the rotor; and

Fig. 8 is a vector diagram showing the angle of application of force between the blade and the rotor body.

Referring to the drawing, Figs. 1 to 8 inclusive, the single stage air compressor therein shown comprises a generally cylindrical outer casing 87 having a circumferential chamber 88 for a cooling fluid having the intake 89 and the discharge 90. The inner surface of the casing 88 forms the circular wall of a compression chamber, the ends of which are closed by the end heads 91 and 92. Within the chamber is the eccentrically mounted rotor having the cylindrical body portion 93 which is in sealing engagement with the top of the compression chamber between the air intake port 94 and the outlet port 95. 90° apart are slots 96, 97, 98 and 99 in the cylindrical body, in which slots radially slide the flat vanes 100, 101, 102 and 103. Such vanes or blades extend for the entire length of the body portion of the rotor and at their ends form a sealed sliding connection with the rotor and heads 104 and 105 which are fixed to the rotor body. The rotor body is rotatably mounted in the end heads 91 and 92 of the stationary casing by means of gudgeons 106 and 107 which are mounted in said end heads by means of ball bearings 108 and 109.

The four vanes are 90° apart and comprise two pairs of vanes, the two vanes of a pair being diametrically opposite. Each of the vanes is fixed to a pair of plungers sliding in diametric channels extending entirely through the cylindrical rotor body. There are two pairs of such diametric channels, one pair 123 accommodating the plungers of a pair of diametrically opposite vanes, and the other pair of channels 124, at right angles to the other pair, accommodating the other pairs of plungers of the diametrically opposed vanes. The plunger channels and plungers therein of one pair of vanes are longitudinally displaced from the plunger and plunger channels of the other pair of vanes so that they may operate without interference. The plungers for one vane reciprocate in the plunger channels for one pair of vanes adjacent the ends at one side of the rotor body, while the plungers of the other vane of the pair reciprocate in those plunger channels at the ends thereof on the diametrically opposite side of said body. Between the plungers in each of said diametric channels are interposed springs which force the plungers and vanes radially outwardly toward the circumferential wall of the compression chamber. The rotor body has a central lubricating duct 125 which extends from one end of the body to the other communicating with the vane plunger channels and the ball bearings for the rotor. Lubricant may be supplied through an inlet 126 and the lubrication supplied to the vane plunger channels will permeate therethrough to the surfaces of the vanes and the interior wall of the compression chamber whereby all of the parts will be adequately lubricated.

The plungers operating at opposite ends of the same diametric channel in the rotor body and respectively fixed to opposite vanes of a pair, are placed in such engagement with each other that they are rigidly held in line and form practically a single continuous structure so far as any relative lateral displacement is concerned; but they move with relation to each other longitudinally, so as to permit relative radial movement of the diametrically opposite vanes of a pair as is necessary during the operation of the apparatus.

It will be noticed from Fig. 3 that horizontal vanes are closer together as regards radial extent, than the vertical vanes and hence the vanes

of a pair must move radially, as the rotor rotates, to accomplish this change in relative position.

This relationship of the vane plungers sliding in the same diametric plunger channel whereby the two plungers form a longitudinally continuous and unbending structure from one end to the other is illustrated in Fig. 4 wherein one plunger 110 to which is fixed the vane 111 sliding in one end of a diametric channel 112 of the rotor body has its inner end 113 reduced in diameter and telescoping with a close fit within the socket 114 formed in the end of the plunger 115 secured to the diametrically opposite vane 116. Between the shoulders 117 and 118 on these diametrically opposite plungers is inserted a spring 119 which forces the plunger outwardly. Within the reduced plunger portion 113 is a bore 120 which at one end opens into the socket 114 and at the other end has a duct 121 connecting the bore with the bearing surface between the plunger and the rotor body. Also the socket 114 connects by means of a duct 122 with the bearing surface between the plunger 115 and the rotor body. Intermediate the ends of the reduced portion 113 and continually in connection with the central duct 125 extending centrally from one end to the other of the rotor as above referred to, is a duct 124. As the plungers separate, oil will be sucked from the duct 123 into the bore 120, and when the vane plungers are moved closer together the lubricant will be obliged to be expelled sufficiently to permit the plungers to move toward each other as the lubricant is non-compressible and would prevent the movement of the vanes toward each other when necessary unless there were relief. While the channels 120 and 122 provide passage of sufficient of the lubricant for lubricating purposes, the close clearances to which these ducts lead do not provide passage for a sufficient amount of lubricant to decrease that between the opposed plungers so as to permit their necessary movement. Such relief, however, is provided by the vent 124 which is continually open to the duct 123. When the plungers are moved away from each other oil is sucked in through the duct 124 and when the plungers are moved toward each other a sufficient amount of oil may be forced through the ducts 120 and 122 for lubrication, but in any event the oil is vented through the duct 124 so that there is no undue restriction upon the inward relative movement of the plungers.

This relative cooperation of opposing plungers, it will be seen, makes the plungers substantially one continuous structure so far as relative lateral movement or bending is concerned, but relative diametrical movement is permitted so that the vanes may properly adjust themselves to their different angular positions in the compression chamber. This rendering of the vane plungers substantially a single structure (except for the relative longitudinal movement referred to) is of great importance. There is a certain amount of clearance between the vanes and plungers on the one hand and the slots and channels in which they slide on the other. When, therefore, the tip of the vane encounters the inner surface of the compression chamber, the outer end of the vane is forced rearwardly and the vane comes against the corner of the slot where the vane emerges from the rotor body, the vane and its plungers being tilted backwardly with relation to the rotor body. This tilting depends upon the clearance between the vanes and their plungers on the one hand and the rotor body on the other, and upon the length of the plunger within the rotor body.

It will be seen that with the clearance referred to fixed, as it is by other factors, the amount of tilting is dependent upon the length of the plunger within the rotor body. With each of the plungers separate and extending only a fraction of the way through the rotor body, the length of the plunger within the body is so relatively short that the tilting is considerable especially when it is in its outermost position. This tilting of the vane causes it to assume a position with relation to the slot edge on the body portion such that instead of the vane bearing against the flat side of the slot it is at an angle thereto and bears heavily against the corner referred to. This results in undue wear of the vanes and what is more serious impedes their free operation in the operation of the apparatus.

By rendering the opposing plungers practically continuous, except for the relative longitudinal movement as referred as, the effective length of each plunger, as regards the tilting referred to, is greatly increased being equal to the entire diameter of the body portion. The clearances remaining the same, which they do because of the other factors determining them, this greatly increased length of the effective plunger length within the rotor body will result in a great reduction and in fact a practical elimination, of the tilting of the plungers and vanes with consequent elimination of the wearing effect of the corners of the slots in the body upon the vanes. This will result in greatly increased durability of the apparatus and also will insure no interference with the free operation of the vanes during the operation of the apparatus.

The advantage of the effectively long plunger over the individually shorter plunger is graphically illustrated in Figs. 7 and 8, Fig. 8 representing conditions with the shorter plunger and Fig. 7 those of the long plunger. Thus in the figures referred to if *a* (constant) represents the width of the slot in which the vane slides, *b* (Fig. 8) represents the extent of the short plunger within the rotor body and the angular position of the driving side of the rotor slot with relation to the width, then the angle at which the vane encounters the outer corner of the driving side of the slot will be represented by the angle *c*. With the effective length of the plunger within the body being increased to the length *d* as shown in Fig. 7, the angle *c* will be reduced to angle *e*, which is much reduced, and the vane is much more nearly parallel to the driving side of the rotor slot so that the digging or wearing effect of the outer corner of the slot upon the side of the vane is much reduced if not entirely eliminated.

While the invention has been illustrated in what is considered its best application it may have other embodiments without departing from its spirit and is not, therefore, limited to the structure shown in the drawing.

What I claim is:

1. In apparatus of the character described, the combination with a casing surrounding a pressure chamber and end heads therefor, of an eccentrically mounted rotor in said casing comprising radially reciprocating vanes and a body having diametric channels, plungers secured to diametrically opposite vanes reciprocating in opposite ends of the channels, and a connection between plungers reciprocating in the same diametric channel permitting relative longitudinal

movement but preventing relative lateral movement of the last mentioned plungers, one of the last mentioned plungers having a reduced end portion forming a shoulder on the plunger and the other of the last mentioned plungers having a recess into which the said reduced end portion telescopically fits, a space being formed between the said shoulder on one plunger and the end of its diametrically opposite plunger, a vent in the wall of said recess, said reduced end plunger having a chamber communicating with said recess and having vents in the wall of said chamber, one in said reduced end portion communicating with said space and one radially outward of said shoulder, said rotor having a longitudinal lubricating duct communicating with said space and a spring in said space and bearing against said shoulder on one plunger and the end of its diametrically opposite plunger.

2. In apparatus of the character described, the combination with a casing surrounding a pressure chamber and end heads therefor, of an eccentrically mounted rotor in said casing comprising radially reciprocating vanes and a body having diametric channels, plungers secured to diametrically opposite vanes reciprocating in opposite ends of the channels, and a connection between plungers reciprocating in the same diametric channel permitting relative longitudinal movement but preventing relative lateral movement of the last mentioned plungers, one of the last mentioned plungers having a reduced end portion forming a shoulder on the plunger and the other of the last mentioned plungers having a recess into which the said reduced end portion telescopically fits, a space being formed between the said shoulder on one plunger and the end of its diametrically opposite plunger, a lateral vent in the wall of said recess beyond the end of said reduced portion in its innermost position, said reduced end plunger having a chamber communicating with said recess and having vents in the wall of said chamber, one in said reduced end portion communicating with said space and one radially outward of said shoulder, said rotor having a longitudinal lubricating duct communicating with said space, and a spring in said space and bearing against said shoulder on one plunger and the end of its diametrically opposite plunger.

RICHARD BECKMAN.