J. D. GEIGER.

GAS TURBINE.

APPLICATION FILED APR. 25, 1912.

1,068,495.

Patented July 29, 1913.

Fig. 1.

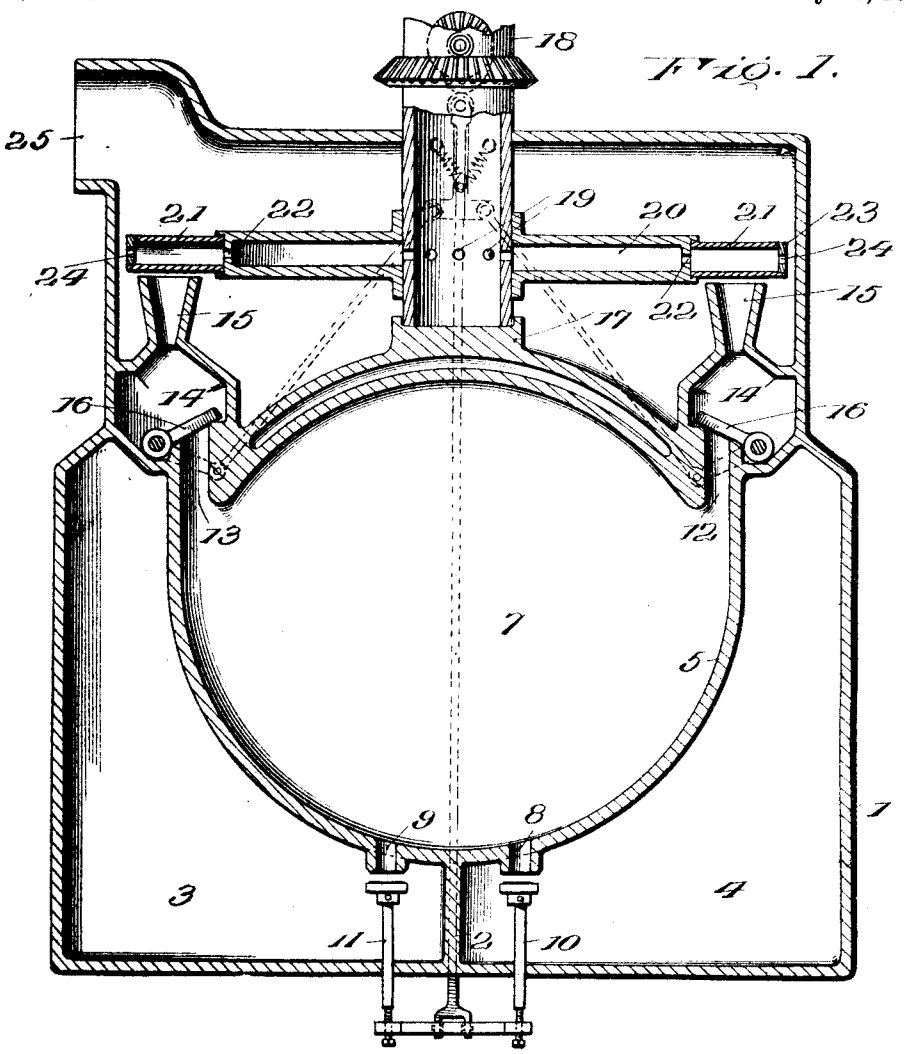

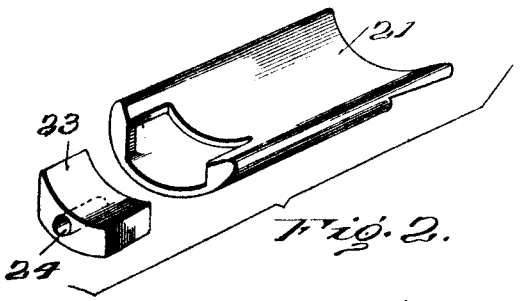

Fig. 2.

Witnesses

R. F. Bishop

Inventor

J. D. Geiger.

By

Attorneys.

UNITED STATES PATENT OFFICE.

JUDSON D. GEIGER, OF BUCYRUS, OHIO.

GAS-TURBINE.

1,068,495. Specification of Letters Patent. Patented July 29, 1913.

Application filed April 25, 1912. Serial No. 693,094.

To all whom it may concern:

Be it known that I, JUDSON D. GEIGER, citizen of the United States, residing at Bucyrus, in the county of Crawford and State of Ohio, have invented certain new and useful Improvements in Gas-Turbines, of which the following is a specification.

This invention relates to rotary motors and particularly to turbine wheels propelled by an explosive gas.

The primary object of the present invention is to produce a simple construction by which the motor may be operated at high speed without unduly heating the blades or vanes and the driving shaft.

A secondary object of the invention is to provide a motor of the indicated type which will be compactly arranged and composed of few parts, so that the necessity for and cost of repairs will be reduced to a minimum.

The invention is fully illustrated in the accompanying drawings and will be hereinafter fully described, the novel features being subsequently pointed out in the claims following the description.

In the drawings: Figure 1 is a sectional view of a motor embodying my improvements; and Fig. 2 is a detail perspective view of the blade or vane.

In carrying out my present invention, I preferably employ a casing 1 which may be a single casting having a partition 2 at one side whereby an air chamber 3 and a gas chamber 4 are provided, the air chamber being in communication with the atmosphere and the gas chamber being in communication with a suitable source of fuel supply, as will be readily understood. Arranged within the outer casing and connected therewith and also with the inner edge or end of the partition 2 is a second partition 5 which is preferably cylindrical and constitutes one wall of a combustion chamber 7.

Inlet ports 8 and 9 are provided in the lower portion of this partition, and these ports communicate, respectively, with the gas chamber 4 and the air chamber 3 to admit the air and gas to the combustion chamber where they are commingled and exploded, so as to produce the propelling agent. The ports 8 and 9 are controlled by valves 10 and 11, respectively, having their stems extended through the outer casing 1, and these valves may be manipulated by any well known valve gearing, a type being indicated by dotted lines in the drawing. The mechanism for producing the explosion within the combustion chamber 7 may also be of any well known type and has been omitted for the sake of clearness. The partition 5 extends entirely around the combustion chamber so as to define the same, but is interrupted at opposite sides of the motor to provide outlet ports 12 and 13 which lead to expansion chambers 14 from which nozzles 15 project. Check valves 16 are provided within the expansion chambers 14 and normally cover the ports 12 and 13 to prevent egress of the impelling gases. Upon the partition 5, diametrically opposite the inlet ports, I provide a boss or bearing 17 in which is journaled the end of the driving shaft 18, the said shaft being hollow, as shown, and provided adjacent the bearing 17 with a plurality of radial openings or perforations 19 leading into the hollow radial arms or spokes 20. The blades or vanes 21 are secured to the outer ends of these spokes 20 and are also hollow, as clearly shown, and communicate with the said spokes through perforations 22 in the ends of the same. The outer ends of the blades or vanes are closed by caps 23 having minute perforations 24 in their outer ends.

When the device is in motion a constant current of air will be drawn in through the hollow shaft to pass outward through the spokes 20 and escape through the blades or vanes 21, the said current of air serving to keep the temperature of the blades down within reasonable limits, so that overheating of the blades and the consequent wearing away or warping of the same will be prevented. The casing 1 extends entirely around the nozzles 15 and the blades and spokes and is provided with an exhaust port 25 through which the spent gases escape to the atmosphere, or they may be conveyed to a superheater or to another turbine wheel, or otherwise utilized.

It will be readily seen from the foregoing description, taken in connection with the accompanying drawings, that I have provided an exceedingly simple rotary motor by which the expansive force of a gas may be efficiently utilized to propel a driving shaft at a high speed. The nozzles are so disposed as to project the gases passing therethrough directly against the inner or concave faces of the blades or vanes, and the full force of the impact will thereby be utilized to propel

the driving shaft. The expansion chambers 14 receive the first discharge of the gas from the combustion chamber and permit a slight expansion of the same, so that subsequent additions to the said gas will cause the same to pass through the nozzles with considerable velocity, and the power thus utilized to its fullest extent. The check valves 16 positively prevent the gases flowing back into the combustion chamber, so that the operation of the machine will be continuous and uninterrupted.

Having thus described my invention, what I claim is:—

1. In a gas turbine, the combination of a combustion chamber, a nozzle in communication therewith and leading therefrom, a hollow driving shaft, a hollow rotor carried by said driving shaft external to the combustion chamber and in communication with the bore of said shaft, and hollow vanes carried by said rotor and in communication with the same, said hollow vanes extending over and beyond the nozzle.

2. In a gas turbine, the combination with a combustion chamber and a nozzle leading therefrom and in communication therewith, of a hollow driving shaft, a hollow rotor secured on said shaft and in communication with the bore of the same, and hollow vanes carried by the said rotor and arranged to receive the impact of gases issuing from the nozzle, the said vanes being provided with vents in their outer ends.

3. In a gas turbine, the combination of a combustion chamber, a nozzle leading therefrom and in communication therewith, a hollow driving shaft, a hollow rotor secured on said shaft and in communication with the bore of the same, hollow vanes carried by said rotor and arranged to receive the impact of gases issuing from the nozzle, and caps carried by and closing the outer ends of the vanes and having vent openings, in their outer extremities.

In testimony whereof I affix my signature in presence of two witnesses.

JUDSON D. GEIGER. [L. S.]

Witnesses:
J. GEIGER,
ED STAUFFER.