B. KAMENSKI.

CARBURETER.

APPLICATION FILED JAN. 26, 1915

1,199,386.

Patented Sept. 26, 1916.

2 SHEETS—SHEET 1.

Fig. 1.

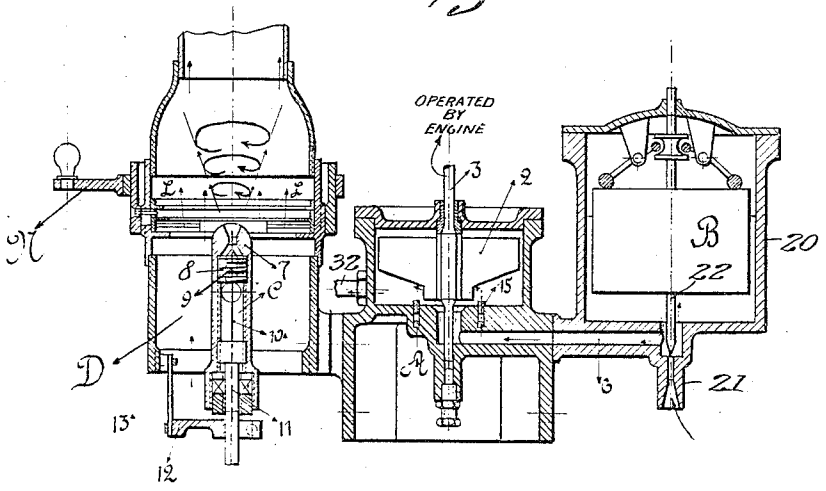

Fig. 2.

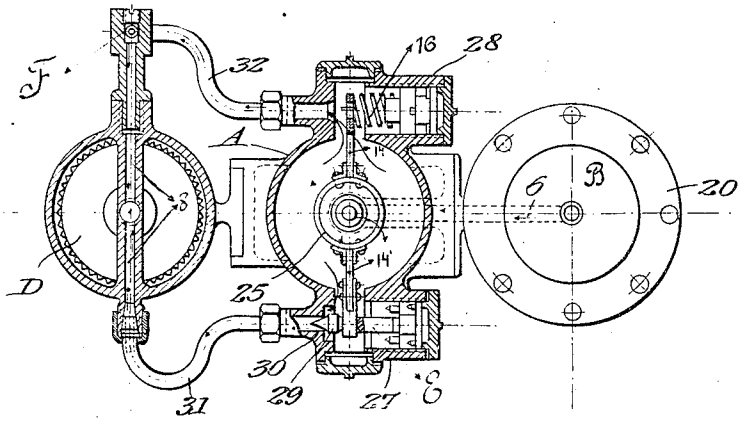

Witnesses.
Edwin J. Beller.
P. J. Hawkinney.

Inventor:
Basil Kamenski,
by Wilkinson, Gunter & Mackaye
his Attorneys

B. KAMENSKI.

CARBURETER.

APPLICATION FILED JAN. 26, 1915.

1,199,386.

Patented Sept. 26, 1916.

2 SHEETS—SHEET 2.

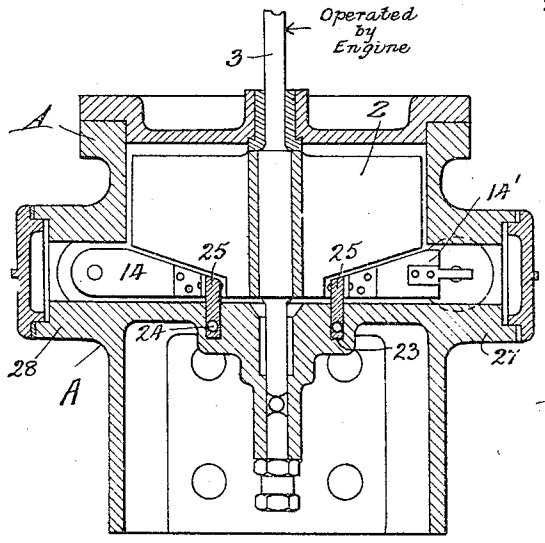

Fig. 3.

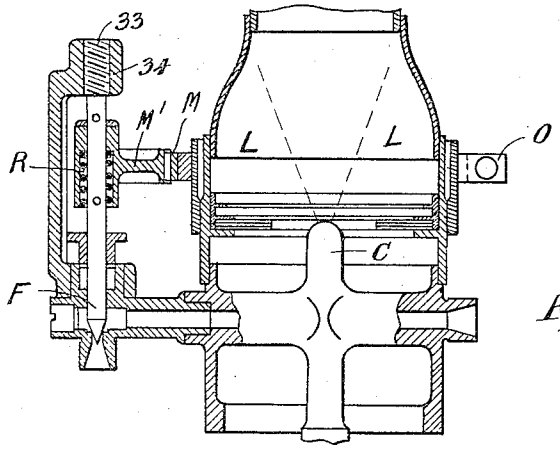

Fig. 4

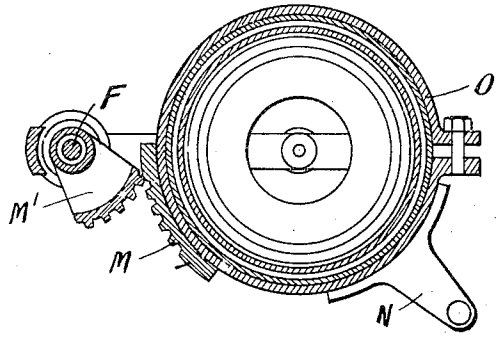

Fig. 5.

Inventor
B. Kamenski.

By H. R. Kerslake
Attorney

UNITED STATES PATENT OFFICE.

BASIL KAMENSKI, OF MOSCOW, RUSSIA.

CARBURETER.

1,199,386. Specification of Letters Patent. Patented Sept. 26, 1916.

Application filed January 26, 1915. Serial No. 4,571.

To all whom it may concern:

Be it known that I, BASIL KAMENSKI, a subject of the Czar of Russia, residing at 19 Trubnikovski pereulok, Moscow, Russia, have invented certain new and useful Improvements in Carbureters; and I do hereby declare the following to be a full, clear, and exact description of the invention, such as will enable others skilled in the art to which it appertains, to make and use the same.

The present invention relates to improvements in carbureters, and more particularly consists in an improved carbureter having a mixing chamber in communication with a fuel supply pump through separate ducts, one of which is under the control of an automatically operated valve adapted to close when a predetermined speed is reached, and the other of which is under the control of a manually actuated valve associated with the throttle mechanism.

Attention is called to my co-pending application for "vertical centrifugal pump, etc." Serial No. 1797, filed January 12, 1915, in which is more particularly set out and claimed the pumping mechanism.

With these and other objects in view the invention consists in the novel details of construction and combinations of parts more fully hereinafter disclosed and particularly pointed out in the claims.

In the accompanying drawings forming a part of this application, and in which similar reference symbols indicate corresponding parts in the several views: Figure 1 is a vertical sectional view through an apparatus constructed in accordance with the present invention. Fig. 2 is a horizontal sectional view of the same. Fig. 3 is an enlarged vertical sectional view of the pump. Fig. 4 is an enlarged vertical sectional view of the mixing chamber; and Fig. 5 is a cross sectional view through the same.

Referring more particularly to the drawings, 20 designates a fuel chamber in communication with a source of supply through an inlet 21. Entrance of the fuel from the supply and through the inlet 21 is under the control of a valve 22, which is operated by means of a float mechanism B, as clearly shown in Fig. 1 to be of a common type well understood, and it is therefore deemed unnecessary to describe the elements thereof in detail; and the same form no part of the present invention.

The fuel chamber 20 is in continuous open communication through a passage 6 with a pump casing A. Through the casing A is journaled a vertical shaft 3, arranged to be constantly driven from the engine, and on which is mounted within the casing A, a rotary pump 2. The base of the pump casing A is formed with a circular recess 23, as disclosed to advantage in Fig. 3, in which it is fitted to oscillate on ball bearings 24 a circular ring 25. To the ring 25 are connected wings 14 and 14′ extending immediately beneath the vanes of the rotary pump 2 and having their ends disposed in offsets 27 and 28 of the pump casing A, for which see Fig. 2. In one offset, 27, and connected to the ring 14′, is a valve 29 adapted to close against a seat 30 and controlling the delivery of fuel from the pump casing A to the nozzle C of the carbureter, such fuel being delivered through a duct 31. The opposite wing 14 is in engagement with one end of a coil spring 16 disposed in the offset 28, and which normally operates to shift such wing 14 and the associated ring 25 and companion wing 14′ to normally maintain the valve 29 open. The offset 28 is in communication through a duct 32 with the nozzle C of the carbureter, the delivery of the fuel therethrough being under the control of a valve F, shown more particularly in Fig. 4.

The nozzle C of the carbureter is located in the mixing chamber D in the usual manner, and above said nozzle is a throttle valve L constructed after any of the approved types as now in use, and adapted to be actuated by a lever or pedal in operative connection with an arm N. The arm N projects from a ring O on which is a fragmentary gear M arranged, when the throttle is being opened wide, to encounter a gear segment M′ connected to the valve F through a resilient connection R. When the valve F is oscillated through these gear connections it will move axially to open or close, due to the threaded upper end 33 thereof engaging in the threaded bearing 34.

In the nozzle C is a plug 9 having curved passages 8 through which the issuing fuel is directed, and which imparts to such fuel a rotary motion such as indicated by the arrows in Fig. 1. A valve 10 is also fitted in the nozzle C, and is fixed to a stem 11 through which the valve may be regulated.

12 is a lever, supported in any adjusted position by a spring 13.

The operation of the improved apparatus may be substantially described as follows: Fuel from a tank will flow in through the inlet 21 to the chamber 20, as permitted by the valve 22 under the influence of the float device B, which maintains a constant level in said chamber 20 in a well understood manner. The fuel in the chamber 20 flows freely through the passage 6 to the pump casing A, under the influence of gravity and the suction of the rotary pump 2. The pump 2 will be rotated continuously from the shaft 3, which is arranged to be driven from the engine at the same or a proportionate speed, and such pump will impart to the fuel incoming from the passage 6 a similar rotary motion, which is indicated by the arrows in Fig. 2. The fuel in its rotary motion encounters the wings 14 and 14′ which oppose its movement, and thereby has a tendency to move the wings and connected ring 25 in a clockwise direction with reference to Fig. 2. This clockwise shifting of the wings 14 and 14′ has a tendency to close the valve 29 against its seat 30, and prevent passage of the fuel from the pump casing A through the offset 27 and duct 31 to the nozzle C of the carbureter. The closing of the valve 29 is, however, opposed by the coil spring 16 in the opposite offset 28, which may be set to yield at any predetermined pressure. The spring 16 yielding when the predetermined pressure is exceeded, the valve 29 will close. It will thus be seen that the valve 29 is automatically operated and controlled from the engine speed, the valve being used for light running. As the engine speed is increased the throttle L is, of course, being opened; and when being moved into full open position by means of the lever or pedal through the arm N and ring O, the fragmentary gear M will encounter the gear segment M′, oscillating the same and correspondingly turning the valve F. The turning motion of the valve F is, through the threads 33 thereon engaging with the threads in the bearing 34, operative to open said valve; so that after the valve 29 has been closed, on the engine exceeding the predetermined speed, the valve F will, upon opening the throttle to increase the speed further, be shifted to open and permit the fuel to pass from the pump casing A through the offset 28 and duct 32 to the nozzle C. The fuel flowing through the nozzle C and through the curved passages in the plug 9 will receive a rotary movement, as indicated by the arrows in Fig. 1. The issuing fuel will become mixed with incoming air, and the charge thus formed delivered to the engine, as indicated and as will be understood. When the throttle is moved to cut down the speed of the engine, the valve F will be likewise closed; and when the engine speed reduces, the speed of the pump 2 being likewise decreased, the opposition offered the spring 16 by the rotating fuel mass, will fall and the spring open the valve 29 through the associated wings 14 and 14′ and ring 25.

It is obvious that those skilled in the art may vary the details of construction and arrangements of parts without departing from the spirit of my invention, and therefore I do not wish to be limited to such features except as may be required by the claims.

I claim:

1. In a device of the character described, the combination of an engine, a carbureter mixing chamber, a nozzle in said chamber, a pump in communication with a source of fuel supply, a plurality of ducts connecting said nozzle and pump, a valve automatically operated by the engine for controlling passage of the fuel from said pump to the nozzle through one of said ducts, a valve in the other of said ducts for controlling the fuel passage therethrough, and means for actuating said last-named valve, substantially as described.

2. In a device of the character described, the combination of an engine, a carbureter mixing chamber, a nozzle in said mixing chamber, a rotary pump in communication with a source of fuel supply, means for driving said pump from the engine, a plurality of ducts connecting said pump and nozzle, a valve controlling passage of the fuel from said pump to the nozzle through one of said ducts, spring means for normally maintaining said valve open, means actuated by the fuel mass in said pump for closing said valve when a predetermined speed is attained, a second valve controlling passage through another of said ducts, and means actuated by the operator for controlling said last-named valve, substantially as described.

3. In a device of the character described, the combination of an engine, a carbureter mixing chamber, a nozzle in said mixing chamber, a rotary pump, means for driving said pump from the engine, a plurality of ducts connecting said pump and nozzle, a valve controlling passage of the fuel from said pump to said nozzle through one of said ducts, spring means for normally maintaining said valve open, movable wings connected to said valve and adapted to be operated upon by the rotating fuel in said pump and close said valve after a predetermined speed has been reached, a second valve located in another of said ducts, and operator-controlled means for actuating said last-named valve, substantially as described.

4. In a device of the character described, the combination of an engine, a carbureter mixing chamber, a nozzle in said chamber, a rotary pump, means for driving said pump from the engine, a plurality of ducts con-

necting said pump and nozzle, a valve controlling passage from said pump to said nozzle through one of said ducts, a rotary ring fitted in said pump, wings extending from said ring, one of said wings be-connected to said valve, a spring associated with another of said wings for normally operating to maintain said valve open, said wings adapted to be encountered by the rotating fuel mass in said pump and close said valve in opposition to said spring, a second valve in another of said ducts, a throttle in said mixing chamber, means for actuating said throttle, and means connected between said throttle and second-named valve for actuating the latter to open after the first-named valve has been automatically closed, substantially as described.

In testimony whereof, I affix my signature, in presence of two witnesess.

BASIL KAMENSKI.

Witnesses:
L. ROLL,
B. KUSMIN.