May 25, 1948. A. G. JANOS 2,442,204

MOISTURE CONTROL MEANS FOR TWO-TEMPERATURE REFRIGERATOR CABINETS

Filed Dec. 18, 1946

Fig. 1.

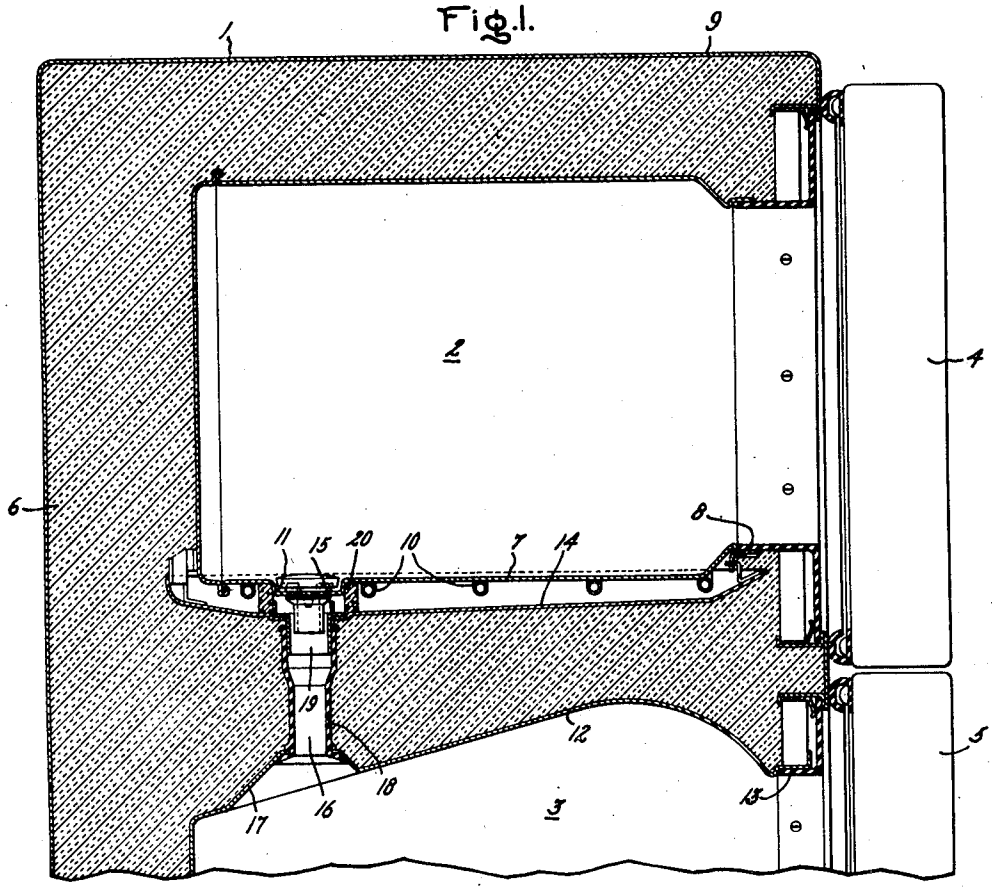

Fig. 2.

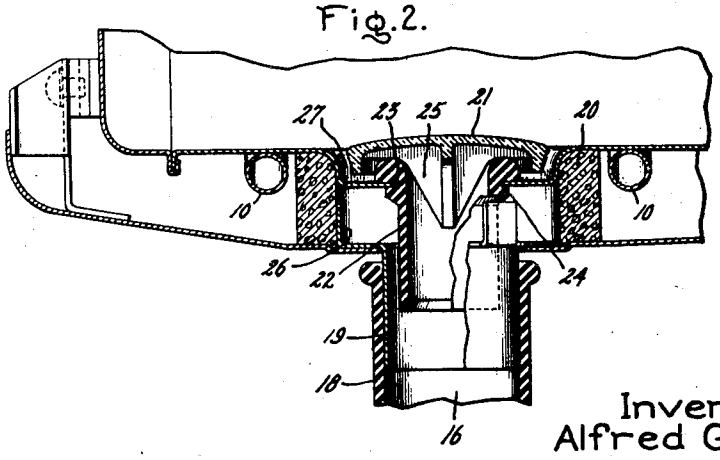

Inventor:
Alfred G. Janos,

by Edwin L. Rich
His Attorney.

Patented May 25, 1948 2,442,204

UNITED STATES PATENT OFFICE

2,442,204

MOISTURE CONTROL MEANS FOR TWO-TEMPERATURE REFRIGERATOR CABINETS

Alfred G. Janos, Erie, Pa., assignor to General Electric Company, a corporation of New York

Application December 18, 1946, Serial No. 716,957

5 Claims. (Cl. 62—103)

1

My invention relates to refrigerator cabinets and more particularly to refrigerator cabinets having a plurality of zones maintained at different temperatures.

In order to afford the preferred degree of refrigeration for a variety of foods some of which must be maintained in a frozen condition and others of which must be kept above freezing, refrigerators may be provided with two insulated compartments. One such compartment, which may be referred to as the freezing compartment, is maintained at a freezing temperature, and the other, which may be referred to as the cooling compartment, is maintained at a considerably higher temperature which is sufficient for cooling the food contained therein. It is necessary at intervals to remove the frost which collects about the freezing compartment. In refrigerators having the freezing compartment located above the cooling compartment a convenient arrangement for disposing of the water which results from the defrosting of the freezing compartment involves the provision of a passage from the low temperature zone adjacent the freezing compartment to the upper portion of the cooling compartment. The water is allowed to flow down the sides of the cooling compartment and ultimately it is discharged through a drain in the bottom of the cooling compartment. However, this arrangement introduces some difficulty in that it provides a communicating passage between two zones which must be maintained at widely differing temperatures, and there will be a transfer of air between the two zones, the colder air from the low temperature zone descending through the communicating passage and being replaced by warmer air from the cooling compartment. Accordingly, it is an object of my invention to provide a two-temperature refrigerator including an arrangement which will afford free transmission of water from the low temperature zone to the higher temperature zone and which will prevent the free transmission of air between these zones.

It is another object of my invention to provide a refrigerator cabinet construction wherein two compartments are maintained at substantially different temperatures and including an improved arrangement for affording a ready discharge of water from one compartment to the other.

It is a further object of my invention to provide a simple arrangement for mounting an element for controlling communication between the low temperature zone and the higher temperature zone.

Further objects and advantages of my invention will become apparent as the following description proceeds and the features of novelty which characterize my invention will be pointed out with particularity in the claims annexed to and forming a part of this specification.

2

For a better understanding of my invention reference may be had to the accompanying drawing in which Fig. 1 is a sectional view of a portion of a refrigerator cabinet incorporating an embodiment of my invention; and Fig. 2 is an enlarged sectional view showing details of the arrangement for controlling communication between the low temperature zone and the higher temperature zone.

Referring to Fig. 1, I have shown a two-temperature refrigerator cabinet 1 which includes a low temperature or freezing compartment 2 and a higher temperature or cooling compartment 3. Doors 4 and 5 are provided for closing the freezing compartment and the cooling compartment respectively. Suitable heat-insulating material 6 is incorporated in the cabinet.

The freezing compartment 2 is formed by a metal shell or wall 7, and a breaker strip 8, of suitable heat-insulating material, is provided at the front of the freezing compartment to close the space between the shell 7 and an outer wall 9 of the refrigerator cabinet. Evaporating coils 10 are fixed to the bottom and sides of the shell 7 in order to provide for the extraction of heat from the freezing compartment. In the bottom of the shell 7 there is provided a depressed portion 11 which has an opening therein.

The cooling compartment 3 is provided with a metal liner 12, and a breaker strip 13 of suitable heat-insulating material closes the space between the liner 12 and the outer wall 9 of the cabinet. A substantial portion of the top surface of the liner 12 slopes toward the rear of the cabinet in order to direct any moisture collecting thereon toward the rear of the cabinet.

In order to collect the water resulting from the defrosting of the freezing compartment 2 there is provided beneath the shell 7 a receptacle or water-collecting member 14. An opening 15 is provided in the receptacle 14 and the receptacle is so constructed that the bottom thereof slopes toward the opening 15 in order to direct toward the aforementioned opening any water collecting in the receptacle.

A passage 16 is provided between the cooling compartment 3 and the low temperature zone surrounding the shell 7 in order that the water resulting from the defrosting of the freezing compartment may be directed from the receptacle

14 through the passage 16 to the cooling compartment. In order to prevent the water flowing through the passage 16 from dropping upon the food in the cooling compartment, and to direct the water toward the rear of the refrigerator and down the back wall of the cooling compartment, the liner 12 is provided with an upwardly-extending sloping portion 17. In order to minimize direct conduction of heat from the metal of the liner 12 to the metal of the receptacle 14 and to minimize the leakage of moisture into the heat-insulating material 6, a tube 18 of suitable heat-insulating, moisture-impervious material, such as rubber, is provided. This tube is connected in sealing relationship to the edge of the upwardly extending portion 17 of the liner 12 and it fits closely about the lower end of a flanged guide or member 19. The upper portion of the guide member 19 is secured to the receptacle 14 in any suitable manner, as by welding, and this member completes the passage 16 between the low temperature zone and the higher temperature zone.

Between the shell 7 and the receptacle 14 and surrounding the upper end of the passage 16 there is provided a flow-controlling element 20 for controlling the communication between the low temperature zone surrounding the freezing compartment 2 and the higher temperature zone of the cooling compartment 3. In the embodiment shown this element is in the form of a ring of suitable material through which water is transmitted freely but which prevents the free circulation of air. By way of example, organic materials such as cellulose sponge and felt have suitable characteristics for this purpose. Also by way of example, inorganic materials such as glass wool or metal wool are suitable after being degreased and treated with a wetting agent.

Referring now to Fig. 2, in order to prevent circulation of air between the freezing compartment 2 and the cooling compartment through the passage 16 a cap 21, which fits in the depression 11 of the shell 7, is provided. A tubular member 22, preferably of some flexible material such as rubber, is arranged to fit in an opening 23 in the depressed portion 11 of the shell 7. A circumferential groove 24 is provided in the upper portion of the tubular member 22 in order to engage the edge of the opening 23 and thereby hold the tubular member 22 in position. As shown in Fig. 2 the top of the tubular member 22 extends a sufficient distance above the surface of the depressed portion 11 of the shell 7 that the edge of the cap 21, while extending below the remainder of the surface of the shell 7, is held above the surface 11. The cap 21 is provided internally with a plurality of web portions 25 by which the cap is supported on the tubular member 22. This arrangement makes it possible for water forming on the inner surface of the shell 7 during defrosting of the freezing compartment to flow between the edge of the cap 21 and the surface 11 and thence over the top edge of the tubular member 22 and down through the passage 16. Since the edge of the cap 21 projects below the general surface of the shell 7 and also below the top of the tubular member 22 there is formed a trap which minimizes the free transmission of air between the interior of the freezing compartment 2 and the cooling compartment 3. During defrosting the transmission of air will be minimized by water held in this trap, and during normal operation the transmission of air will be minimized by ice formed in this trap. The flow-controlling element for controlling the communication between the cooling compartment and the low temperature zone surrounding the freezing compartment is shown at 20 in Fig. 2. This element is composed of a material which readily transmits water but which substantially prevents the transmission of air. As can be clearly seen in Fig. 2, the guide member 19 is provided at its upper end with a plurality of projecting vertical surfaces or flanges 26 which assist in maintaining the lower end of the flow-controlling element 20 in its proper position. It can be further seen that the depressed portion of the shell 7 previously referred to provides a projecting substantially vertical surface 27 which assists in maintaining the upper portion of the element 20 in its proper position. The element 20 in the embodiment shown is in the form of a ring of suitable material, such as cellulose sponge, which surrounds the upper end of the passage 16. The element 20 is slightly compressed between the shell 7 and the receptacle 14 and it is prevented from being forced inwardly toward the passage 16 under such compression by the flanges 26 and the portion 27 of the shell 7.

During normal operation of the refrigerator a very low temperature will be maintained in the freezing compartment 2 and in the area surrounding this compartment, and a much higher temperature will be maintained in the cooling compartment 3. The low temperature air in the zone between the shell 7 and the receptacle 14 would normally tend to move downwardly through the passage 16 into the cooling compartment 3 and conversely the warmer air in the cooling compartment 3 would tend to rise upwardly through the passage 16 to the aforementioned low temperature zone. This would result in an undesirable diminishing of the temperature difference between the two zones. By my invention this free circulation of air is effectively prevented since the flow-controlling element 20 is interposed between the low temperature zone and the higher temperature zone and is composed of material which prevents the free circulation of air therethrough. Frost will still collect to some extent on the outside of the shell 7, for example, by leakage of moisture from the outside of the cabinet through the insulation, and it will be necessary at intervals to remove this frost. When the freezing compartment 2 is defrosted and the water from the melting frost collects in the receptacle 14, this water will be transmitted readily from the low temperature zone through the passage 16 to the cooling compartment and thence downwardly for disposition in any suitable manner, since the flow-controlling element 20 which is interposed between the low temperature zone and the higher temperature zone is composed of a material which freely transmits water.

While I have shown a particular embodiment of my invention, I do not desire my invention to be limited to the particular construction shown and I intend in the appended claims to cover all modifications within the spirit and scope of my invention.

What I claim as new and desire to secure by Letters Patent of the United States is:

1. A cabinet for refrigerators and the like comprising a freezing compartment, a water-collecting member spaced from said freezing compartment for defining a low temperature zone, means providing a higher temperature zone, means providing communication between said zones and means disposed adjacent said low

temperature zone for controlling communication between said zones to provide for free transmission of water from said water-collecting member through said communicating means and to prevent free circulation of air.

2. A cabinet for refrigerators and the like comprising a freezing compartment, a cooling compartment, a member for collecting water resulting from the defrosting of said freezing compartment, said member being spaced from said freezing compartment to define a low temperature zone, means providing communication between said low temperature zone and said cooling compartment for the discharge of said water from said low temperature zone, and means disposed adjacent said low temperature zone for controlling communication between said low temperature zone and said cooling compartment to afford a free flow of water and to prevent the free circulation of air.

3. A cabinet for refrigerators and the like comprising a freezing compartment, a cooling compartment, a water-collecting member spaced from said freezing compartment for defining a low temperature zone, said member being provided with an opening therein, means providing communication between said opening and said cooling compartment, and a flow-controlling element disposed adjacent said low temperature zone between said water-collecting member and said freezing compartment and surrounding said opening, said element being composed of a material which freely transmits water and which prevents the free circulation of air.

4. A cabinet for refrigerators and the like comprising a freezing compartment, a cooling compartment, means including a wall of said freezing compartment for providing a low temperature zone adjacent said freezing compartment, means providing communication between said low temperature zone and said cooling compartment, and means disposed adjacent said low temperature zone for controlling communication between said low temperature zone and said cooling compartment through said communicating means, said communicating means and said wall of said freezing compartment including portions for positioning said controlling means.

5. A cabinet for refrigerators and the like comprising a freezing compartment, a cooling compartment, means providing a low temperature zone adjacent said freezing compartment, means providing communication between said cooling compartment and said freezing compartment and said low temperature zone, means within said freezing compartment for preventing the free circulation of air between said freezing compartment and said cooling compartment, means adjacent said low temperature zone for preventing the free circulation of air between said low temperature zone and said cooling compartment, both of said means for preventing free circulation of air being adapted to afford free flow of water to said cooling compartment through said communicating means whereby water resulting from the defrosting of said freezing compartment may be discharged from said freezing compartment and from said low temperature zone.

ALFRED G. JANOS.

REFERENCES CITED

The following references are of record in the file of this patent:

UNITED STATES PATENTS

Number	Name	Date
1,961,495	Hopkins	June 5, 1934
2,089,261	Hopkins	Aug. 10, 1937