(19) Europäisches Patentamt
European Patent Office
Office européen des brevets

(11) **EP 1 985 750 B1**

(12) **EUROPEAN PATENT SPECIFICATION**

(45) Date of publication and mention of the grant of the patent:
11.11.2009 Bulletin 2009/46

(21) Application number: **07707593.5**

(22) Date of filing: **29.01.2007**

(51) Int Cl.:
D21F 3/00 *(2006.01)* ***D21G 1/00*** *(2006.01)*

(86) International application number:
PCT/JP2007/051362

(87) International publication number:
WO 2007/088802 (09.08.2007 Gazette 2007/32)

(54) **BELT FOR PAPERMAKING MACHINE**

BAND FÜR PAPIERMASCHINE

BANDE POUR MACHINE A PAPIER

(84) Designated Contracting States:
DE FI GB

(30) Priority: **31.01.2006 JP 2006022618**

(43) Date of publication of application:
29.10.2008 Bulletin 2008/44

(73) Proprietor: **ICHIKAWA CO.,LTD.**
Bunkyo-ku
Tokyo 113-8442 (JP)

(72) Inventor: **ISHII, Tsutomu**
Tokyo
113-8442 (JP)

(74) Representative: **HOFFMANN EITLE**
Patent- und Rechtsanwälte
Arabellastrasse 4
81925 München (DE)

(56) References cited:
JP-A- 2002 327 389
JP-A- 2004 036 015
JP-A- 2004 052 204

Note: Within nine months of the publication of the mention of the grant of the European patent in the European Patent Bulletin, any person may give notice to the European Patent Office of opposition to that patent, in accordance with the Implementing Regulations. Notice of opposition shall not be deemed to have been filed until the opposition fee has been paid. (Art. 99(1) European Patent Convention).

EP 1 985 750 B1

Printed by Jouve, 75001 PARIS (FR)

Description

TECHNICAL FIELD

[0001] The present invention relates to a belt for a papermaking machine (hereinafter, may be referred to as "belt" for short). In more detail, it is a belt for a papermaking machine having its outer peripheral surface composed of a multilayer and excellent property such as crack resistance, abrasion resistance and permanent-deformation resistance.

BACKGROUND ART

[0002] A belt for a papermaking machine composed of a substrate and polyurethane is used in each manufacturing step in a paper factory. In other words, a shoe press belt or a transfer belt is used in a press part of a paper manufacturing step, whereas a soft calender belt is used in a calender part.

[0003] Basically, these belts are composed of a substrate made of fabrics etc. to strengthen the whole belt, and polyurethane stacked on both sides or a single side of the substrate. In order to manufacture such belts, the steps for coating a substrate with a liquid polyurethane polymer, impregnating and curing with a curing agent are applied.

[0004] Various kinds of polyurethane are used as the polyurethane for a belt for a papermaking machine depending on a using part such as a press part and use in a papermaking step. In any use, the polyurethane is required to have excellent properties because the belt rotates at a high speed around a roller and is exposed to strong pressure between rollers or a roller and a press shoe. Especially, high-speed operation of a paper machine and high-pressurization of press parts, which were caused for improving productivity of papermaking, have lately brought severer conditions of use of the belt. The belt to be used in such a high-performance papermaking machine is required to have performance at a higher level. The belt for a papermaking machine is generally required to have the properties such as abrasion resistance, permanent-deformation resistance, crack resistance and compression fatigue resistance.

[0005] As described above, the belt has polyurethane stacked on both sides or a single side of the substrate. In the case of both sides, the outer peripheral surface is brought in contact with the felt side, whereas the inner peripheral surface is brought in contact with a press roller and a press shoe. Because the outer peripheral surface stacked on the felt side is exposed to severe pressure and drainage gutters are generally provided on the outer peripheral surface to improve hydration efficiency, cracks tend to be generated at the bottom and edge of the drainage gutters. In addition, there has been a problem that the surface of the protruding portions located between adjacent drainage gutters tends to suffer abrasion. Therefore, the polyurethane to be used as the outer peripheral surface among the polyurethane constituting a belt is particularly required to have improved crack resistance and abrasion resistance.

[0006] In order to produce polyurethane, a diisocyanate having two isocyanate groups at the terminal and a polyol having a plurality of hydroxyl groups at the terminal are subjected to polyaddition reaction to produce a urethane pre-polymer having the isocyanate groups at the terminal and then thus obtained liquid urethane prepolymer, which is low molecular weight, is added with a curing agent (chain extender) and cured under heating to obtain solid polyurethane of high molecular weight.

[0007] Selection of a curing agent to be used in the production of high-molecular weight polyurethane has an important effect on the property of the polyurethane. Typical examples of the curing agent of polyurethane for papermaking include dimethylthiotoluenediamine (DMTDA) and methylenebisorthochloroaniline (MBOCA), both of which are frequently used. MBOCA is excellent in abrasion resistance, whereas DMTDA is particularly excellent in crack resistance. Crack resistance is an important property for a belt to be used in papermaking and DMTDA is often used for use requiring crack resistance.

[0008] In JP-A-2004-52 204 (corresponding to EP-A-1382738), for example, DMTDA used as a curing agent for the polyurethane of a belt for a papermaking machine gives a belt for a papermaking machine having a good balance between crack resistance, abrasion resistance and permanent-deformation resistance.

[0009] As a crack being generated in a belt, however, in addition to the usual cracks caused by strong external force, tiny hair-like cracks, so-called hair cracks, are generated on the surface of the protruding portions located between adjacent drainage gutters. A material cured with DMTDA has the weak point that hair cracks tend to be generated, although it is excellent in preventing usual cracks. And this had a problem that the hair cracks generated evenly over the surface of the protruding portions of a belt increase surface roughness resulting in abrasion by friction. The drainage gutters are generally provided on the outer peripheral surface of a belt to be used in papermaking in order to drain squeezed water. There is a phenomenon that the edges of the surface of the protruding portions located between the adjacent drainage gutters are chipped, which tends to occur more often in a material cured with DMTDA.

[0010] On the other hand, a material cured with MBOCA has the weak point that cracks tend to be generated, although it is excellent in abrasion resistance. It has been known that polyurethane having high hardness selected to improve particularly the abrasion resistance of a belt for a papermaking machine tends to generate more cracks even though it is a material cured with DMTDA or a material cured with MBOCA. In other words, it has been considered that it is generally difficult to attain both enhancing abrasion resistance and preventing cracks at the same time which conflict

with each other.

[0011] EP 1378601 A1 describes a shoe press belt of a papermaking machine in accordance with the preamble of claim 1 of the present application.

DISCLOSURE OF INVENTION

PROBLEM TO BE SOLVED BY THE INVENTION

[0012] After having studied a way to solve the above problem, since cracks are often generated on the bottom and its edge of the drainage gutter located on the polyurethane resin layer on the polyurethane peripheral surface and because the hair crack and abrasion on the surface of the protruding portion of the belt should be noted, the present inventor has found that a belt excellent in all of crack resistance, abrasion resistance and hair crack resistance can be obtained by making a resin stacked on the outer periphery (felt side) of a substrate to 2 or more multilayer, stacking a material excellent in crack resistance for a layer (hereinafter referred to as intermediate layer) to be in direct contact with the substrate, stacking a material excellent in abrasion resistance and hair crack resistance on the peripheral layer thereof, and making an outermost layer (hereinafter, referred to as outermost layer for short) located on the outer peripheral surface, and also, when the drainage gutter is set on the outer peripheral surface, by cutting the drainage gutter on the peripheral surface so that its bottom is deeper than the boundary surface between the intermediate layer and the outermost layer resulting in forming the bottom and its edge of the drainage gutter with the material excellent in crack resistance and in forming the outermost layer with the material excellent in abrasion resistance and hair crack resistance.

[0013] Specifically, polyurethane cured with DMTDA is stacked for the intermediate layer, whereas polyurethane cured with a curing agent other than DMTDA, for example, with MBOCA, or a thermosetting resin selected from epoxy resins and unsaturated polyester resins is stacked for the outermost layer.

[0014] That is, the present invention is a belt for a papermaking machine having an outer peripheral surface stacked on the felt side of a substrate, wherein the outer peripheral surface comprises an intermediate layer in contact with the substrate and an outermost layer located on the outer periphery of the intermediate layer, wherein a drainage gutter is provided by cutting on the outer peripheral surface, so that the bottom of the drainage gutter is cut to a position which is deeper than the boundary surface between the intermediate layer and the outermost layer, wherein the intermediate layer is made of polyurethane cured with dimethylthiotoluenediamine, and wherein the outermost layer is made of polyurethane cured with an curing agent other than dimethylthiotoluenediamine, or a thermosetting resin selected from epoxy resins and unsaturated polyester resins.

ADVANTAGES OP THE INVENTION

[0015] The belt for a papermaking machine of the present invention is excellent in abrasion resistance and hair crack resistance because the polyurethane cured with a curing agent other than DMTDA, for example, MBOCA, or a thermosetting resin selected from epoxy resins and unsaturated polyester resins is set on the outermost layer. In addition, since a drainage gutter is cut to a position deeper than the boundary surface between the above two layers and the polyurethane cured with DMTDA of the intermediate layer is exposed at the bottom and its edge of the drainage gutter, cracks is hardly generated at the bottom and its edge. On the other hand, the surface of protruding portions located between adjacent drainage gutters is the material of the outermost layer, therefore the chip on the edge can be protected as well. Thus, a belt for a papermaking machine more excellent than conventional belts in all aspects of crack resistance, abrasion resistance and hair crack resistance is provided.

BEST MODE FOR CARRYING OUT THE INVENTION

[0016] Figure 1 illustrates the structure of the belt for a papermaking machine of the present invention. Figure 1 is a cross-sectional view of the belt 1 and a shoe-side resin layer 3 and a felt-side resin layer 4 are stacked on the inner peripheral surface and on the outer peripheral surface of a substrate 2 respectively.

The felt-side resin layer 4 on the outer peripheral surface comprises an intermediate layer 5 and an outermost layer 6, wherein the intermediate layer 5 is in contact with the substrate and the outermost layer 6 is stacked on the outside of the intermediate layer. A plurality of drainage gutters 7 are provided on the belt in the direction of belt traveling. Since the drainage gutter 7 is cut to a position deeper than the boundary surface 9 between the intermediate layer 5 and the outermost layer 6, the exposed intermediate layer 5 forms the bottom 8 and its edge of the drainage gutter 7.

[0017] The outer peripheral surface of the belt obtained by such a stacking method and installation of the drainage gutter comprises the intermediate layer 5 and the outermost layer 6, wherein the outermost layer 6, which is in contact with the felt side in a papermaking machine, is made of polyurethane cured with a curing agent other than DMTDA, for

example, cured with MBOCA, or a thermosetting resin selected from epoxy resins and unsaturated polyester resins. Therefore, abrasion, hair cracks and chips on the edge of the surface of protruding portions, are suppressed even in a high speed and high pressure operation of a papermaking machine. On the other hand, since the drainage gutter 7 is cut to a position deeper than the boundary surface 9 between the intermediate layer 5 and the outermost layer 6, and the bottom 8 and its edge made of the polyurethane cured with DMTDA which is excellent in crack resistance, cracks are hardly generated.

[0018] Among the felt-side resin layer 4 of the outer periphery of the belt of the present invention, the intermediate layer 5 is made of polyurethane cured with DMTDA and the outermost layer 6 is particularly required to have abrasion resistance and hair crack resistance. Polyurethane cured with a curing agent other than DMTDA or a thermosetting resin selected from epoxy resins and unsaturated polyester resins is used as a material for the outermost layer 6.

[0019] In the belt for a papermaking machine, besides the felt-side resin layer 4 constituting the outer peripheral surface of the above substrate 2, the shoe-side resin layer 3 is also usually stacked on the shoe side of the substrate 2. Similarly to the outer peripheral surface, thermosetting polyurethane is used most frequently as a material for the shoe-side resin layer 3.

[0020] As a substrate, a woven fabric is usually used, but two overlapped fabrics without weaving, a film, a knitted material and a spiral winding made of narrow width belt form are also used.

[0021] A polyurethane of the intermediate layer is produced by reacting a polyol and a diisocyanate to form a urethane prepolymer, and the prepolymer is mixed with a curing agent (chain extender) and then applied to a substrate followed by drying and curing (or heating) to obtain polyurethane of high molecular weight.

[0022] Examples of the polyol for producing a urethane prepolymer include a polyether polyol such as polyethylene glycol, polypropylene glycol and polytetramethylene glycol; and a polyester polyol such as polycaprolactone ester, polycarbonate, polyethylene adipate, polybutylene adipate and polyhexene adipate.

[0023] As a diisocyanate for urethane prepolymer raw material, any usually known substance as a raw material for polyurethane, such as tolylene diisocyanate (TDI), diphenylmethane diisocyanate (MDI), m-xylene diisocyanate and naphthalene diisocyanate can be used, but TDI and MDI are particularly preferable. The 4,4'-isomer of MDI is most preferable among various isomers. A mixture of TDI and MDI can also be used.

[0024] The mixing ratio of a polyol and a diisocyanate in the reaction for producing a urethane prepolymer from them is an equivalent ratio of isocyanate group/OH group of the range of 1.3/1 to 4/1, preferably 1.4/1 to 1.6/1.

[0025] The reaction product contains a large amount of an unreacted diisocyanate and solvent, which are removed by distillation to obtain the prepolymer as a distillation residue.

[0026] Dimethylthiotoluenediamine of a curing agent has various isomers depending on the substitution location of the dimethylthio group and the amino group. A mixture of these isomers can be used and is commercially available as ETHACURE 300 (trade name) made by ALBEMARLE Co. in USA.

[0027] Methylenebisorthochloroaniline of a curing agent is commercially available as IHARA CUAMINE-MT (trade name) made by IHARA CHEMICAL INDUSTRY CO., LTD.

[0028] A urethane prepolymer and a curing agent are preferably mixed in such a mixing ratio that the equivalent ratio of an active hydrogen group of the curing agent and an isocyanate group of the urethane prepolymer is 0.9 to 1.10.

[0029] The curing reaction with a curing agent can be conducted by a known method. The temperature of the curing reaction is usually 20 to 150°C, preferably 90 to 140°C. It is preferable to continue the reaction for at least 30 minutes.

[0030] The urethane prepolymer has generally low viscosity, of which the chain is extended with a curing agent (chain extender) to obtain polyurethane of high molecular weight. In the production of the belt for a papermaking machine of the present invention that is composed of multilayered polyurethane and a substrate 2, the substrate 2 such as a fabric is impregnated with a mixture of a urethane prepolymer forming the intermediate layer 5 and a curing agent, dried and cured (or may be heated) to form the intermediate layer 5, and then a mixture of a urethane prepolymer and a curing agent or a thermosetting resin selected from epoxy resins and unsaturated polyester resins is applied onto the intermediate layer 5 to obtain the outermost layer 6. And, the belt shown in Figure 1 is obtained, wherein the inner peripheral surface of the substrate 2 is impregnated and stacked with the polyurethane layer and the opposite side is impregnated and stacked with the outer peripheral surface composed of the intermediate layer 5 and the outermost layer 6.

[0031] In the case where the thermosetting polyurethane is used in the outermost layer 6, the kind, the mixing ratio and the reaction temperature etc. of the polyol and diisocyanate of raw material are almost similar to in the intermediate layer 5, but a curing agent other than dimethylthiotoluenediamine (DMTDA) is used. The curing agent includes an aromatic diamine (methylenebisorthochloroaniline (MBOCA), trimethylene-bis-4-aminobenzoate, 1,2-bis-(2-aminophenylthio) ethane, methylenedianiline sodium chloride complex, trimethylene glycol-di-paraaminobenzoate); an aliphatic polyol (1,4-butanediol, trimethylpropane) ; an aromatic polyol (hydroquinonediethylol ether) and the like. MBOCA is particularly preferable from the standpoints of abrasion resistance, hair crack resistance and the like.

[0032] A thermosetting resin other than polyurethane such as an epoxy resin and an unsaturated polyester resin can also be used for the outermost layer 6. The epoxy resin is preferably a bisphenol A type epoxy resin that is produced by condensation of bisphenol A and epichlorohydrin and cured with a curing agent such as an aliphatic amine, an

aromatic amine and an acid anhydride. The unsaturated polyester resin is preferably an unsaturated polyester resin that is produced by curing a mixture of an unsaturated polyester resin obtained from an unsaturated dicarboxylic acid and a glycol and a polymerizable vinyl monomer such as styrene with a radical initiator such as an organic peroxide. An epoxy resin among the above thermosetting resins is particularly preferable for use in the outermost layer 6 of the present invention.

[0033] The unsaturated polyester resin of a thermosetting resin, is commercially available as ADEKA RESIN EP4100 (trade name) made by ADEKA Corporation.

[0034] The bisphenol A type epoxy resin of another thermosetting resin is commercially available as U-PICA 4516P (trade name) made by Japan U-PICA Company, Ltd.

[0035] The method for stacking polyurethane resin on both sides of a substrate 2 is carried out by the following steps as shown in, for example, Figures 2 and 3.

(Step 1)

[0036] A substrate 2 is stretched between rollers 20 and 21 as shown in Figure 2 and a mixture of a urethane prepolymer to form a shoe-side resin layer 3 and dimethylthiotoluenediamine (DMTDA) of a curing agent, is applied onto the substrate 2 from a resin-coating nozzle 22 while rotating the rollers, and the shoe-side resin layer 3 is dried and cured (or may be heated).

(Step 2)

[0037] After drying and curing of the shoe-side resin layer 3, the front and back of the substrate 2 is inverted, as shown in Figure 3, a mixture of a urethane prepolymer to form an intermediate layer 5 and DMTDA of a curing agent, is applied onto the other side of the substrate 2 stacked with the shoe-side resin layer 3, and dried and cured (or may be heated) to form the intermediate layer 5. Furthermore, a mixture of a urethane prepolymer to form an outermost layer 6 (not shown in the figure) and MBOCA of a curing agent, is similarly applied onto the intermediate layer 5 shown in Figure 3 and dried and cured (or may be heated) to form sequentially a felt-side resin layer 4 composed of the intermediate layer 5 and the outermost layer 6.

[0038] When a thermosetting resin selected from epoxy resins and unsaturated polyester resins is used for the outermost layer 6, the outermost layer can be formed by adding a curing agent or a radical initiator to an uncured liquid resin, which is commercially available, such as a condensate of bisphenol A and epichlorohydrin and a mixture of an unsaturated polyester and a polymerizable vinyl monomer followed by heating and curing similarly to in curing of the urethane prepolymer.

[0039] After the felt-side resin layer 4 is thus formed as the outer peripheral surface of the substrate 2, a drainage gutter 7 is formed. The drainage gutter 7 is formed by cutting the belt in the direction of belt traveling with a rotary cutter and the like. In the present invention, since the polyurethane cured with DMTDA forming the intermediate layer 5 is necessary to be exposed and form the bottom and its edge of the drainage gutter 7, the drainage gutter 7 is cut as shown in Figure 1 so that its bottom is deeper than the boundary surface 9 between the intermediate layer 5 and the outermost layer 6.

[0040] The relative ratio about thickness of each layer on the outer peripheral surface is preferably 40 to 90, particularly preferably 50 to 80 for the intermediate layer 5, and preferably 60 to 10, particularly preferably 50 to 20 for the outermost layer 6, relative to the total thickness 100 of the felt-side resin layer 4. A too thick intermediate layer 5 (too thin outermost layer 6) causes earlier exposure of the intermediate layer 5 to the belt surface when abrasion of the outermost layer 6 proceeds in the use of the belt. In contrast, a too thin intermediate layer 5 (too thick outermost layer 6) causes cracks sometimes at the bottom 8 and its edge vicinity or the adjacent gutter wall, because the boundary surface 9 between the intermediate layer 5 and the outermost layer 6 gets closer to the bottom 8 of the drainage gutter 7, therefore it is not favorable.

[0041] In the present invention, the depth of the drainage gutter 7 is 40 to 70, preferably 50 to 60, relative to relative ratio 100 of the thickness of the felt-side resin layer 4. The drainage gutter 7 is cut so that the boundary surface 9 forms a part of the wall of the drainage gutter 7. The distance from the boundary surface to the bottom 8 is preferably 10 to 90, particularly preferably 40 to 60 relative to depth 100 of the drainage gutter 7. The deeper drainage gutter 7 than the above depth unfavorably causes cracks sometimes at the bottom 8 and its edge vicinity or the adjacent gutter wall. In contrast, the shallower drainage gutter 7 than the above depth unfavorably lowers dehydration efficiency of the belt.

EXAMPLES

[0042] The present invention is described specifically with reference to the following examples, however, to which the present invention is not limited at all. In each example and comparative example, the urethane prepolymer, the curing

agent and the thermosetting resin used as materials for the intermediate layer and the outermost layer are as follows.

(1) Urethane prepolymer: "TAKENATE L-2395 (made by Takeda Pharmaceutical CO., LTD.)"
(2) Curing agent DMTDA: "ETHACURE 300" made by ALBEMARLE Co. (80/20 mixture of 3,5-dimethylthio 2,4-toluenediamine/3,5-dimethylthio 2,6-toluenediamine)
(3) Curing agent MBOCA: "IHARA CUAMINE-MT" made by IHARA CHEMICAL INDUSTRY CO., LTD. (methyl-enebisorthochloroaniline)
(4) Thermosetting resin: "ADEKA RESIN EP4100" (made by ADEKA Corporation): bisphenol A type epoxy resin obtained by condensation of bisphenol A and epichlorohydrin

[Example 1]

(Stacking of polyurethane on the inner peripheral surface)

[0043] DMTDA was prepared as a curing agent and mixed with the urethane prepolymer so that the equivalent ratio of H/NCO was 0.97.

(Coating of prepolymer)

[0044] A substrate 2 was stretched between rollers 20 and 21 as shown in Figure 2 and the mixture of the above urethane prepolymer to form a resin layer 3 on the inner peripheral surface (shoe side) and the curing agent was applied onto the substrate 2 from a resin-coating nozzle 22 while rotating the rollers, and the shoe-side resin layer 3 was then dried and cured.

(Stacking of polyurethane of intermediate layer)

[0045] Subsequently, the front and back of the substrate 2 was inverted and a mixture of the urethane prepolymer to form the intermediate layer 5 and DMTDA of a curing agent, was applied onto the other side of the substrate 2 as shown in Figure 3, and dried and cured.

(Stacking of polyurethane of outermost layer)

[0046] When the intermediate layer 5 was cured and lost its fluidity, the urethane prepolymer and MBOCA, of a curing agent were mixed so that the equivalent ratio of H/NCO was 0.97. The mixture was applied onto the intermediate layer 5 to form the outermost layer 6 and then dried and cured. Subsequently, the polyurethane on the inner peripheral surface, the polyurethane of the intermediate layer and the polyurethane of the outermost layer were completely cured by reacting at 100°C for 3 hours with a heat source 23 installed above.
[0047] Thus, the belt having one layer on the inner peripheral surface and two layers of the intermediate layer 5 and the outermost layer 6 stacked on the outer peripheral surface of the substrate 2 was obtained. The thickness of each layer on the outer peripheral surface is 1.5 mm (75) for the intermediate layer 5 and 0.5 mm (25) for the outermost layer relative to the total thickness 2.0 mm (relative ratio: 100) of the felt-side resin layer 4.
[0048] After the polyurethane was cured, the drainage gutter 7 of a width of 1.0 mm and a depth of 1.0 mm was formed using a rotary cutter on the surface of the polyurethane on the outer peripheral surface. The layer of the polyurethane cured with DMTDA, which was the intermediate layer 5, was thus exposed to form the bottom of the drainage gutter.

(Evaluation of properties)

[0049] The properties of the obtained sample belt were measured.
The method for measuring the properties is as follows.

(1) Cracks

[0050] The device shown in Figure 4 was used for the measurement. The both ends of the test piece 31 were sandwiched by the cramp hands 32 and 32, which were designed to interlock right and left in reciprocating motion. The tension applied to the test piece 31 was 3 kg/cm and the speed of the reciprocating motion was 40 cm/sec.
[0051] Also, the test piece 31 was sandwiched between the rotary roller 33 and the press shoe 34 so that the outer peripheral surface was brought into contact with the rotary roller 33, and pressed at 36 kg/cm^2 by moving the press shoe toward the rotary roller.

[0052] The reciprocating motion was repeated onto the test piece using this device and the number of the reciprocating motion was counted until cracks were generated at the bottom and its edge of the test piece 31. Subsequently, the protruding portions located between drainage gutters on the outer peripheral surface of the test piece were observed for hair cracks generation.

(2) Abrasion resistance

[0053] The device shown in Figure 5 was used for the measurement. In Figure 5, the test piece 31 was set under the press board 35 and the outer peripheral surface on the undersurface (object surface of measurement) of the test piece 31 was brought into contact with the rotary roller 36 and subjected to pressing.
The friction block 37 was mounted on the outer periphery of the rotary roller 36. The test piece 31 was subjected to contact friction for 20 minutes under the conditions of a pressure of 10 kg/cm and a rotation speed of the rotary roller of 100 m/minute and was measured for the loss of thickness after the test.

[Example 2]

[0054] In Example 1, the polyurethane cured with MBOCA was replaced by ADEKA RESIN EP4100 (bisphenol A type epoxy resin) of a thermosetting resin, as the resin of the outermost layer, and a belt sample was prepared similarly to in Example 1. The properties of the obtained sample belt were measured. The results are also shown in Table 1.

[Table 1]

	construction of outer peripheral surface				properties of belt		
	intermediate layer		outermost layer		The number until crack generation (x 10^4)	hair crack genera tion	abra sion (mm)
	resin	curing agent	resin	curing agent			
Exam. 1	poly urethane	DMTDA	poly urethane	MBOCA	14~16	slight	0.05 or less
Exam. 2	poly urethane	DMTDA	bisphenol A type epoxy resin		14~15	slight	0.05 or less
C.Ex. 1	--	--	poly urethane	DMTDA	14~16	marked	0.2
C.Ex. 2	--	--	poly urethane	MBOCA	10~12	marked	0.05 or less
Exam.: Example C.Ex.: Comparative Example							

[Comparative Example 1]

[0055] A belt sample was prepared similarly to in Example 1 except that a single layer of only the polyurethane cured with DMTDA used as the intermediate layer in Example 1 was formed on the outer peripheral surface. The properties of the obtained belt sample were measured. The results are also shown in Table 1.

[Comparative Example 2]

[0056] A belt sample was prepared similarly to in Example 1 except that a single layer of only the polyurethane cured with MBOCA used as the outermost layer in Example 1 was formed en the outer peripheral surface. The properties of the obtained sample belt were measured. The results are also shown in Table 1.

[0057] As apparent from the results in Table 1, the belt of the present invention, which the outer peripheral surface has two layers comprising of the intermediate layer of the polyurethane cured with DMTDA and the outermost layer of the polyurethane cured with MBOCA, has the improved and balanced crack resistance, abrasion resistance and hair crack resistance.
In contrast, the belt of Comparative Example 1, which the outer peripheral surface has a single layer of the polyurethane cured with DMTDA, has insufficient abrasion resistance and hair crack resistance although having good crack resistance,

whereas the belt of Comparative Example 2, which the outer peripheral surface has a single layer of the polyurethane cured with MBOCA, is inferior in crack resistance and hair crack resistance although having good abrasion resistance.

INDUSTRIAL APPLICABILITY

[0058] The present invention provides a belt for a papermaking machine superior in crack resistance, abrasion resistance, hair crack resistance and the like to a conventional belt having polyurethane on the outer peripheral surface constituted by a single layer. The improved durability of the belt of the present invention is expected to increase productivity in a papermaking process leading to quality improvement and cost reduction of the product.

BRIEF DESCRIPTION OF THE DRAWINGS

[0059]

[Figure 1] Cross-sectional view showing the construction of the belt for a papermaking machine of the present invention
[Figure 2] Manufacturing step of the belt for a papermaking machine of the present invention
[Figure 3] Manufacturing step of the belt for a papermaking machine of the present invention
[Figure 4] Test device of crack resistance
[Figure 5] Test device of abrasion resistance

DESCRIPTION OF REFERENCE NUMERALS

[0060]

1	Belt
2	Substrate
3	Shoe-side resin layer
4	Felt-side resin layer
5	Intermediate layer
6	Outermost layer
7	Drainage gutter
8	Bottom of drainage gutter
9	Boundary surface between intermediate layer and outermost layer
20, 21	Roller
22	Resin-coating nozzle
23	Heat source
31	Test piece
32	Cramp hand
33	Rotary roller
34	Press shoe
35	Press board
36	Rotary roller
37	Friction block

Claims

1. A belt (1) for a papermaking machine having an outer peripheral surface stacked on the felt side of a substrate (2), wherein the outer peripheral surface comprises an intermediate layer (5) in contact with the substrate (2) and an outermost layer (6) located on the outer periphery of the intermediate layer (5), and wherein a drainage gutter (7) is provided by cutting on the outer peripheral surface, so that the bottom (8) of the drainage gutter (7) is cut to a position which is deeper than the boundary surface (9) between the intermediate layer (5) and the outermost layer (6), **characterized in that** the intermediate layer (5) is made of polyurethane cured with dimethylthiotoluenediamine, and that the outermost layer (6) is made of polyurethane cured with a curing agent other than dimethylthiotoluenediamine, or a thermosetting resin selected from epoxy resins and unsaturated polyester resins.

2. The belt (1) for a papermaking machine according to claim 1, wherein the outermost layer (6) is made of polyurethane

cured with methylenebisorthochloroaniline.

3. The belt (1) for a papermaking machine according to claim 1, wherein the thermosetting resin is a bisphenol A type epoxy resin.

Patentansprüche

1. Band (1) für eine Papiererzeugungsmaschine mit einer äußeren peripheren Oberfläche, die auf der Oberseite eines Substrates (2) angeordnet ist, worin die äußere periphere Oberfläche eine Zwischenschicht (5) im Kontakt mit dem Substrat (2) und eine äußerste Schicht (6) umfasst, die auf der äußeren Peripherie der Zwischenschicht (5) lokalisiert ist, und worin eine Drainagerinne (7) vorgesehen ist, indem die äußere periphere Oberfläche geschnitten ist, so dass der Boden (8) der Drainagerinne (7) zu einer Position geschnitten ist, die tiefer ist als die Grenzoberfläche (9) zwischen der Zwischenschicht (5) und der äußersten Schicht (6), **dadurch gekennzeichnet, dass** die Zwischenschicht (5) aus Polyurethan erzeugt ist, das mit Dimethylthiotoluoldiamin gehärtet ist, und dass die äußerste Schicht (6) aus Polyurethan, das mit einem anderen Härtungsmittel als Dimethylthiotoluoldiamin gehärtet ist, oder einem wärmehärtenden Harz erzeugt ist, ausgewählt aus Epoxyharzen und ungesättigten Polyesterharzen.

2. Band (1) für eine Papiererzeugungsmaschine nach Anspruch 1, worin die äußerste Schicht (6) aus Polyurethan erzeugt ist, das mit Methylenbisorthochloranilin gehärtet ist.

3. Band (1) für eine Papiererzeugungsmaschine nach Anspruch 1, worin das wärmehärtende Harz ein Epoxyharz vom Bisphenol-A-Typ ist.

Revendications

1. Courroie (1) pour machine à papier ayant une surface périphérique extérieure empilée sur le côté feutre d'un substrat (2), dans laquelle la surface périphérique extérieure comprend une couche intermédiaire (5) en contact avec le substrat (2) et une couche la plus extérieure (6) située sur la périphérie extérieure de la couche intermédiaire (5), et dans laquelle une gouttière de drainage (7) est définie par une découpe sur la surface périphérique extérieure, de sorte que le fond (8) de la gouttière de drainage (7) est coupé à une position qui est plus profonde que la surface limitrophe (9) entre la couche intermédiaire (5) et la couche la plus extérieure (6), **caractérisée en ce que** la couche intermédiaire (5) est faite de polyuréthane cuit avec de la diméthylthiotoluènediamine, et **en ce que** la couche la plus extérieure est faite de polyuréthane cuit avec un agent de cuisson autre que de la diméthylthiotoluènediamine, ou une résine thermodurcissable sélectionnée parmi les résines époxy et les résines de polyester non saturé.

2. Courroie (1) pour machine à papier selon la revendication 1, dans laquelle la couche la plus extérieure (6) est faite de polyuréthane cuit avec de la méthylènebisorthochloroaniline.

3. Courroie (1) pour machine à papier selon la revendication 1, dans laquelle la résine thermodurcissable est une résine époxy de type bisphénol A.

Fig. 1

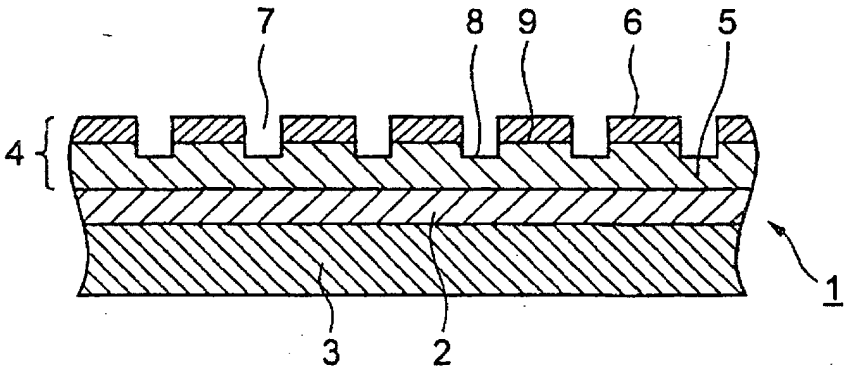

Fig. 2

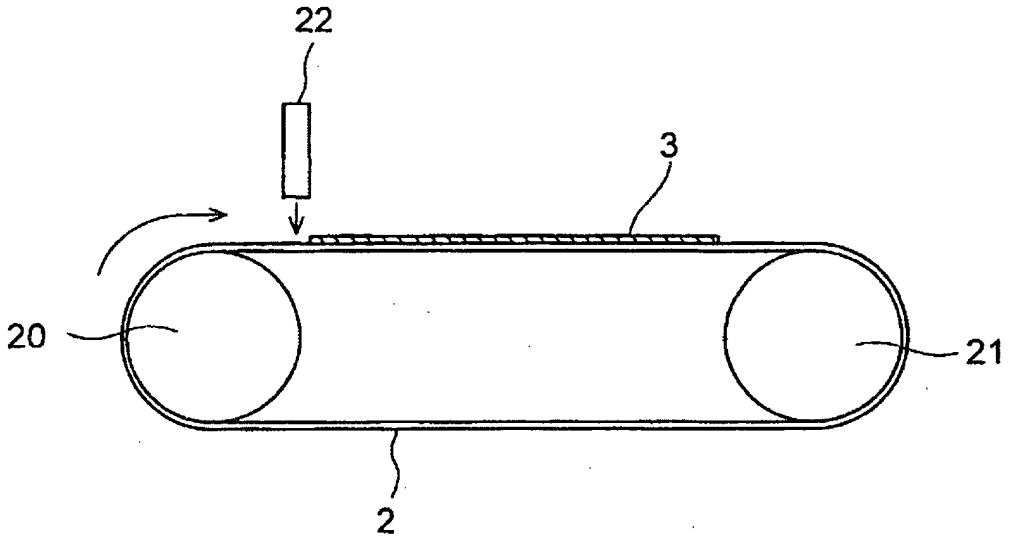

Fig. 3

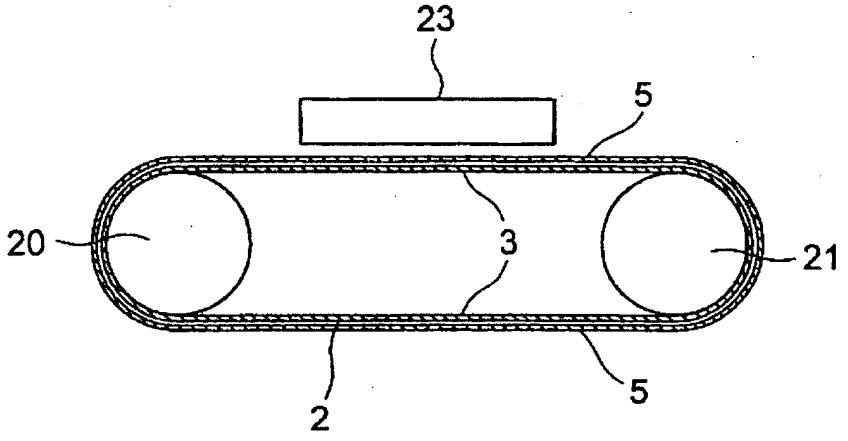

Fig. 4

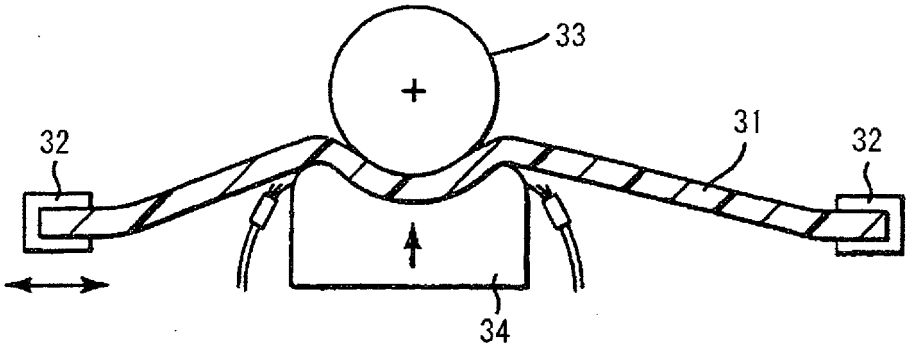

Fig. 5

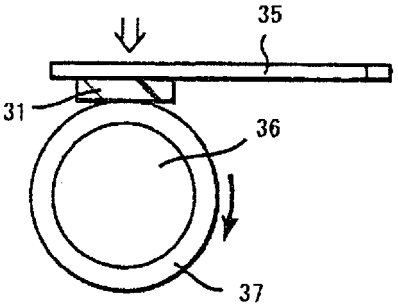

REFERENCES CITED IN THE DESCRIPTION

This list of references cited by the applicant is for the reader's convenience only. It does not form part of the European patent document. Even though great care has been taken in compiling the references, errors or omissions cannot be excluded and the EPO disclaims all liability in this regard.

Patent documents cited in the description

- JP 2004052204 A **[0008]**
- EP 1382738 A **[0008]**
- EP 1378601 A1 **[0011]**