Jan. 26, 1932. R. ELLIS 1,842,663

AIR CLEANER AND VALVE OILER

Filed Feb. 18, 1930

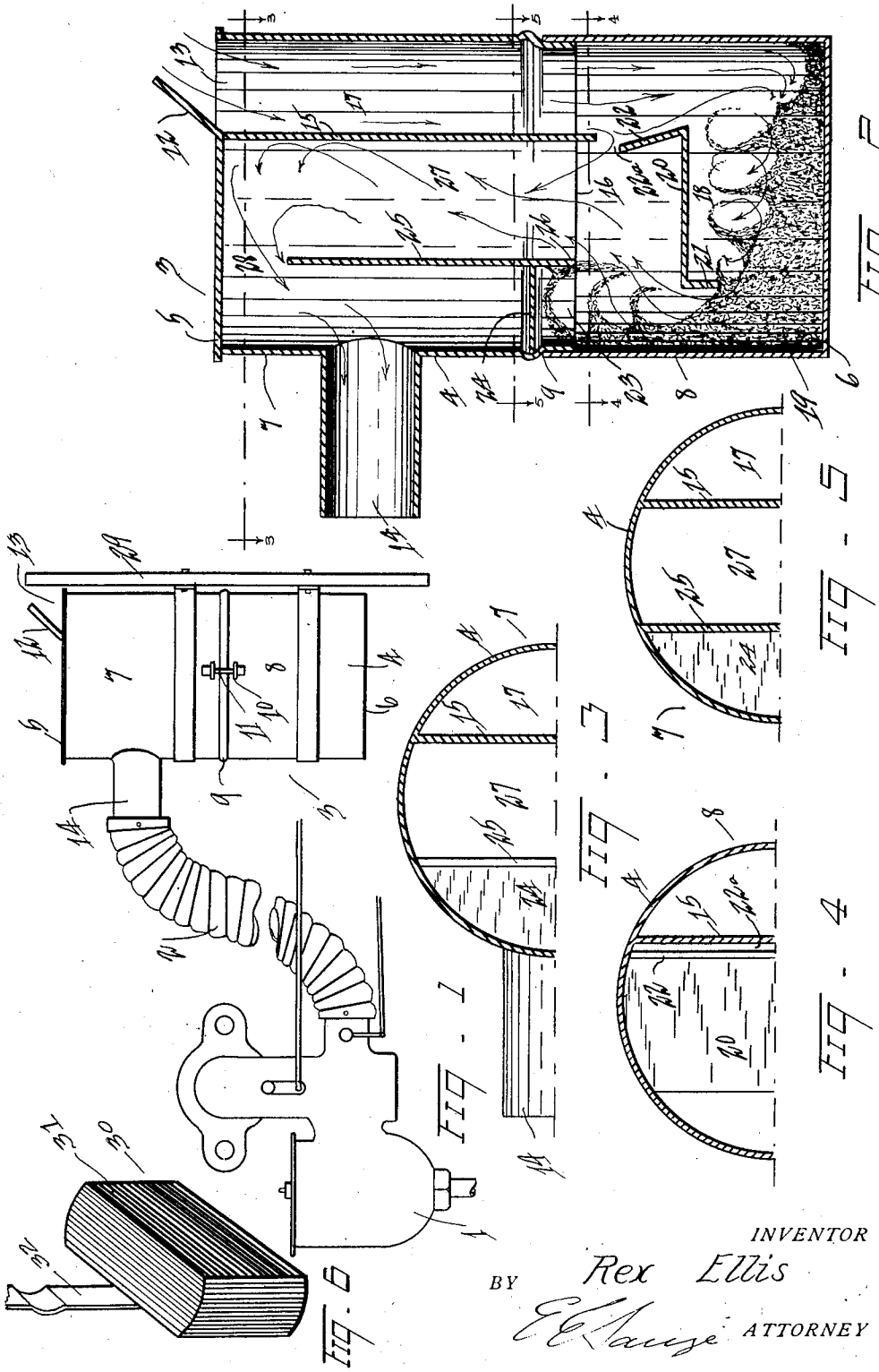

Fig. 2

Fig. 5

Fig. 3

Fig. 4

Fig. 1

Fig. 6

INVENTOR

BY Rex Ellis

E. E. Lange ATTORNEY

Patented Jan. 26, 1932 1,842,663

UNITED STATES PATENT OFFICE

REX ELLIS, OF PENDLETON, OREGON, ASSIGNOR TO ELLIS MANUFACTURING CO., OF PENDLETON, OREGON, A CORPORATION OF OREGON

AIR CLEANER AND VALVE OILER

Application filed February 18, 1930. Serial No. 429,339.

This invention relates to air cleaners, and has as one of its objects to provide an air cleaner that will thoroughly clean air for combustion purposes.

Another object of the invention is to provide an air cleaner that will thoroughly remove all abrasive substances from air before it enters the cylinders. A further object of the invention is to provide an air cleaner that will change a certain amount of vegetable oil into a vapor and provide therefrom a valve stem lubricant.

A further object of the invention is to provide an air cleaner that will automatically pass air through oil for cleansing purposes and which will separate the nonvaporized oil from the air without moving parts.

A further object of the invention is to provide an air cleaner that will make its own oil screen, pass the air through it, and remove the nonvaporized oil from the air.

A further object of the invention is to provide an air cleaner that will cleanse air and that will provide a supercleansing by the use of a removable screen or filter attachment.

A further object of the invention is to provide an air cleaner that has no moving parts and which will provide a cleansing means that is positive in action and which will not easily get out of order.

A further object of the invention is to provide an air cleaner that is not bulky and because of its comparatively small dimensions provides a miximum of cleansing efficiency with a minimum of size.

A further object of the invention is to provide an air cleaner that is exceedingly economical in the use of oil.

A further object of the invention is to provide an air cleaner that is cheap to construct and that is easy to install.

With these and other objects in view, reference is now had to the accompanying drawings, in which

Fig. 1 is a side elevation of the device showing one application;

Fig. 2 is an enlarged vertical sectional view thereof showing the arrangement of its walls, baffles, etc.;

Fig. 3 is a cross sectional view of the device taken on the line 3—3 of Fig. 2;

Fig. 4 is a cross sectional view of the device taken on the line 4—4 of Fig. 2;

Fig. 5 is a cross sectional view of the device taken on the line 5—5 of Fig. 2; and

Fig. 6 is a representation of a filter in perspective.

Having reference to the drawings like numerals refer to like parts throughout the several views and the numeral 1 refers to a carburetor having a connecting pipe 2 which connecting pipe is intended to connect with an air cleaner 3 which is the subject matter of this invention, and this air cleaner will now be described.

The air cleaner consists of a container having side walls 4 preferably of cylindrical shape and is provided on its upper end with a cap 5 and on its lower end with a bottom 6, which latter is made leak proof with the side wall for a purpose to be explained.

The container is divided into two sections, an upper section 7 and a lower section 8, made separable by a sliding or other joint 9, and the sections are equipped with clips 10 and a bolt 11 wherewith to secure the sections together as a rigid and tight whole.

In the cap 5 is provided a lip 12 that is upraised to provide an inlet 13 in the top of the container, and opposite to this inlet and in the side wall of the upper section is an outlet 14, which outlet is intended to connect with the flexible tubing 2 before mentioned.

As the purpose of this invention is primarily to supply clean air to a carburetor, obviously the device must be constructed with a capacity to satisfy the demands upon it, and therefore the outlet 14 is provided with a predetermined area, an area depending upon the carburetor and obviously the requirements of the engine, (not shown) used with that carburetor.

The inlet above mentioned is preferably of slightly greater area than the outlet, and is formed by the upturned lip 12 which joins with the cap 5 at approximately one third the diametral distance across the cap and forming a segment, the juncture of the lip with the cap forming one side of the open-

ing which is of the nature of a chord and the side wall, of the nature of an arc, completing the opening and providing an inlet of ample area.

Extending downward from the cap 5 of the upper section is a long baffle 15 consisting of a plate extending from side wall to side wall and depending slightly below the lower edge 16 of the upper section, and this baffle provides with the side wall 4 an inlet channel 17 that is directed downward through the container.

In the bottom of the lower section a chamber 18 is provided to contain a dust collecting fluid, represented by the dots 19, which fluid may consist of any oily substance of a liquid nature, preference being given however to a vegetable oil as this oil will provide lubricating qualities and is not liable to be consumed by the heat of the combustion chamber of the engine.

Extended from side to side in the lower section 8, and in the same direction as the long vertical baffle 15 is a horizontal baffle 20, which baffle rests in parallel relation to the normal surface of the fluid, and is provided on one end with a depending apron 21 positioned in the path of the incoming air whereby to direct the air through a part of the agitated fluid, which agitation is caused by the inflowing air in a manner that will be presently explained, and this baffle 20 is provided on its opposite end with an upturned deflector plate 22 that is bent upward toward the long vertical baffle 15 but is drawn inward at its upper part to provide a slope in continuation of this baffle 15 that by cooperating with said vertical baffle will deflect the incoming air current against the surface of the fluid, where, aided by the side wall of the container, a whirling wave movement will be provided that will act in a vertical plane, as shown.

The fluid thus provides a wave action that will travel diametrally across the container, assisted by the movement of the air in its endeavor to pass through the device.

This positioning of the up-turned deflector 22 with relation to the vertical baffle provides a mixing vent 22*a* by its cooperation therewith that will deflect the incoming air currents in a manner to be explained.

As the action of the air now carries the agitated fluid up the side wall of the container, and as it is necessary to separate the oil as much as possible from the air before it enters the carburetor, a trap 23 is provided disposed at the termination of the fluid movement, and out of the path of the moving air, and this trap consists of a horizontally positioned cover 24 secured in the upper section and the trap is completed by a short vertical baffle 25 that is mounted in the upper section and which, depending below the flat cover section 24 and joining therewith, provides a lip 26 against which the waving oil strikes to prevent the oil being carried into an adjoining expansion channel 27 formed by said short vertical baffle and said long vertical baffle, and so called from the fact that the capacity of this channel is greater than that of the other channels, and hence there will be a slowing up of the air through this channel giving the oil additional time to separate from the air, falling to the horizontal baffle from whence it will return to the body of the oil over the said apron.

The top of this short vertical baffle is positioned short of the top of the container to provide a connecting channel 28 between said expansion chamber and the outlet 14.

In use the device will be connected to the carburetor in the manner shown, or in any other convenient manner, the device being secured preferably to the toe board 29 or any other suitable location, and by the action of the engine a suction will be created through the carburetter which will extend to the device and air will be drawn through the inlet and into the outlet channel.

The air now being drawn in by suction will be forced in a generally straight line until a portion of it strikes against the deflecting plate of the horizontal baffle, this deflecting plate directing the air to the side wall and forcing the air to engage the edge of the surface of the oil perpendicular therewith but with a whirling movement as indicated by the arrows in Fig. 2, the air will start agitating the oil and produce the wave effect shown which will extend up to the trap mentioned, each wave providing a screen through which the air will pass to be relieved of all impurities gathered by the oily waves for deposit in the bottom of the oil chamber.

That the air will not carry too much oil with it the trap 23 is placed above the path of the air, the centrifugal force throwing the oil up into this trap and preventing its going on into the outlet.

To prevent the oil following in with the air as it drops away from the lip of the trap 23 the vent 22*a* formed by the cooperation of the upturned deflector plate 22 and the lower end of the long vertical baffle permits a certain amount of air to enter through, which air has not come in contact with the oil, and therefore this air striking against the uprising air in the expansion chamber, and with a high velocity due to the small dimensions of this vent, a separating action is provided that causes the oil to drop from the oil laden air and in turn purifying the air that has been drawn in through the vent.

The air then passes out through the outlet channel with the correct volume for the carburetor, and as there will be a certain amount of oil still retained in the air, the amount has been determined by actual tests to be just sufficient to lubricate the valve

stems of the engine, which is made possible by the use of the vegetable oil. And with a perfectly clean oil obviously the life of the engine will be prolonged.

Obviously to agitate the oil in the manner explained a current must be induced or otherwise provided having a relatively high velocity, to impart a condition of agitation whereby screens are formed of the nature of small waves, and as in waves the screens break up into a spray which, with the oil dropping from the trap 23 by its lip 26 will, with the assistance of the vent, properly condition the air for use for its intended purpose, which conditioning consists of mingling a certain amount of the oil spray with the air in a certain proportion.

For use in gasoline engines the proportion is as the amount of air required for fuel purposes is to the amount of oil required to lubricate the valve stems of the valves of the engine, which last named parts are not shown as they are old in the art and have many variations, suffice it then that whether the admixture of oil and air is used in gas engine work or for other purposes that a dual purpose exists, and the separation to the proper proportions will be controlled by the length of the lip 26 and the size of the vent 22*a*, the proper mixture being had by the proper location of the horizontal baffle with relation to the lower edge of the long vertical baffle and the lower edge of the short vertical baffle which forms the lip 26.

As it is necessary that a clean oil be used for lubricating purposes the oil is taken from the spray which is the naturally cleaner part of the oil as the movement of this spray is more rapid than the impurities, with the tendency in favor of permitting the impurities to fall to the bottom of the lower section even with the oil in a decided state of agitation.

With the proportion duly provided for its particular purpose it is then obvious that its control for use may be by a single throttle.

By forming this container into two parts and readily separable, and by the shape of the expansion chamber which obviously has flat sides and curved ends, in case of necessity, a filter 30 may be provided in the nature of that shown in Fig. 6 in perspective, which filter may consist of a basket 31 containing any filtering substance in which case a convenient spring lug 32 may be attached to the basket for snap securement over the top of the short vertical baffle, or obviously a loose filtering material may be readily inserted in this channel and as readily withdrawn, owing to its straight sides, for removal and for cleansing purposes.

Having thus described my invention, I claim:

1. In an air cleaner, a container, comprising an upper section and a lower section separably attached to each other, and an inlet and an outlet provided in its upper section, said outlet having a predetermined area, a chamber provided at the bottom of said lower section, and adapted to contain a dust collecting fluid, vertically positioned baffles disposed in said upper section, and a horizontally positioned baffle contained in said lower section in parallel relation to the normal surface of the fluid, and provided with an upturned deflector, said deflector being disposed to provide an unobstructed air passageway and to direct the incoming air perpendicular to the surface of the fluid, for diametral and wave producing agitation thereof by contact therewith at one edge of its surface perimeter, and an expansion channel adapted to decrease the velocity of air through said air passageway without resistance and in its passage to said outlet.

2. In an air cleaner, a container, comprising an upper section and a lower section separably attached to each other, an inlet and an outlet oppositely positioned in its upper section, said outlet having a predetermined area, and said inlet having a greater area than said outlet, a chamber provided at the bottom of said lower section, and adapted to contain a dust collecting fluid, a long vertically positioned baffle disposed in said upper section to provide an inlet channel, adapted to direct the incoming air perpendicular to the surface of the fluid at one edge of its surface, and to agitate said fluid diametrally, a horizontal baffle plate disposed in said lower section, in parallel relation to the normal surface of the fluid, and provided with a depending apron positioned to direct the air through a part of the agitated fluid, and a short vertically positioned baffle disposed to provide with said long vertically positioned baffle an expansion channel adapted to complete an air passageway through said inlet and inlet channel, and through said chamber and said expansion channel to said outlet.

3. In an air cleaner, a container, comprising an upper section and a lower section, separably attached to each other, an inlet and an outlet oppositely positioned in its upper section, a chamber provided at the bottom of said lower section, and adapted to contain a dust collecting fluid, a long vertically positioned baffle disposed in said upper section to provide an inlet channel, directed perpendicular to the normal surface of the fluid, a horizontal baffle disposed in said lower section in parallel relation to the normal surface of the fluid, and provided with an up turned deflector plate cooperably positioned with said long baffle to deflect the incoming air current against the surface of the fluid, where, aided by the side wall of the container, a whirling movement in a vertical plane of the fluid will result directed diametrally across said container with the movement of said air, a depending apron attached to said horizon-

tal baffle to direct the moving air through a part of the agitated fluid, and a short vertical baffle disposed with relation to said long vertical baffle to provide an expansion channel adapted to complete an air passageway through said inlet and outlet channel, and through said chamber and said expansion channel to said outlet.

4. In an air cleaner, a container, comprising an upper section and a lower section, separably attached to each other, an inlet and an outlet oppositely positioned in its upper section, a chamber provided at the bottom of said lower section, and adapted to contain a dust collecting fluid, a long vertically positioned baffle disposed in said upper section to provide an inlet channel, directed perpendicular to the normal surface of the fluid, a horizontal baffle disposed in said lower section and provided with an up turned deflector plate adapted to provide with said long vertical baffle a mixing vent, and cooperably positioned therewith to deflect the incoming air current to contact and agitate said fluid with a wave effect and with a diametral movement, a depending apron attached to said horizontal baffle and disposed to direct the moving air through the agitated fluid, a trap disposed at the termination of the fluid movement and out of the path of the moving air, a short vertical baffle mounted in said upper section to form the lip of said trap and providing with the long vertical baffle a chamber of excess capacity to provide an expansion channel, adapted to receive air through said mixing vent, and adapted to complete an air passageway through said inlet and inlet channel, and through said chamber and said expansion channel to said outlet.

5. In an air cleaner, the combination with a filter, a container, comprising an upper section and a lower section, separably attached to each other, an inlet and an outlet oppositely positioned in its upper section, a chamber provided at the bottom of said lower section, and adapted to contain a dust collecting fluid, a long vertically positioned baffle disposed in said upper section to provide an inlet channel, directed perpendicular to the normal surface of the fluid, a horizontal baffle disposed in said lower section and provided with an up-turned deflector plate adapted to provide with said long vertical baffle a mixing vent, and cooperably positioned therewith to deflect the incoming air current to contact and agitate said fluid with a wave effect and with a diametral movement, a depending apron attached to said horizontal baffle and disposed to direct the moving air through the agitated fluid, a trap disposed at the termination of the fluid movement and out of the path of the moving air, a short vertical baffle mounted in said upper section to form the lip of said trap and providing with the long vertical baffle a chamber of excess capacity to provide an expansion channel, adapted to receive air through said mixing vent, and adapted to complete an air passageway through said inlet and inlet channel, and through said chamber and said expansion channel to said outlet, and provide for the reception of said filter within said expansion chamber upon separation of the two sections.

In testimony whereof I have affixed my signature.

REX ELLIS.