United States Patent [19]

Gertsch et al.

[11] **3,891,226**

[45] **June 24, 1975**

[54] **RELEASABLE SKI BINDING**

[75] Inventors: **Ernest Gertsch,** Wegen; **Ulrich Gertsch,** Interlaken, both of Switzerland

[73] Assignee: **Gertsch AG,** Interlaken, Switzerland

[22] Filed: **Apr. 9, 1973**

[21] Appl. No.: **349,286**

[30] **Foreign Application Priority Data**

Apr. 17, 1972 United Kingdom 17569/72

[52] **U.S. Cl.** ..... **280/11.35 K**

[51] **Int. Cl.** **A63c 9/086**

[58] **Field of Search**.....280/11.35 K, 11.35 C, 280/11.35 A, 11.35 E, 11.35 W, 11.35 V, 280/11.35 R, 11.36; 36/2.5 AL

[56] **References Cited**

UNITED STATES PATENTS

2,450,531	10/1948	Tappé	280/11.35 V
2,899,210	8/1959	Marker	280/11.35 R
3,489,424	1/1970	Gertsch et al.	280/11.35 K
3,764,155	10/1973	Perryman	280/11.35 Y

FOREIGN PATENTS OR APPLICATIONS

457,235	1968	Switzerland	280/11.35 K
844,838	1939	France	280/11.35 K
50,332	1940	France	280/11.35 A

Primary Examiner—Leo Friaglia
Assistant Examiner—David M. Mitchell
Attorney, Agent, or Firm—Werner W. Kleeman

[57] **ABSTRACT**

A releasable ski binding comprising a release plate releasably retained at the ski by locking elements anchored at the ski, the binding having clamping elements for clamping the sole of the ski boot. At both of the lengthwise extending sides of the release plate there are provided lateral impact or abutment members which extend upwardly from the standing or support surface of the release plate. Each of the lateral impact members defines at least two lateral impact points or locations for the ski boot which is to be clamped at the binding.

10 Claims, 3 Drawing Figures

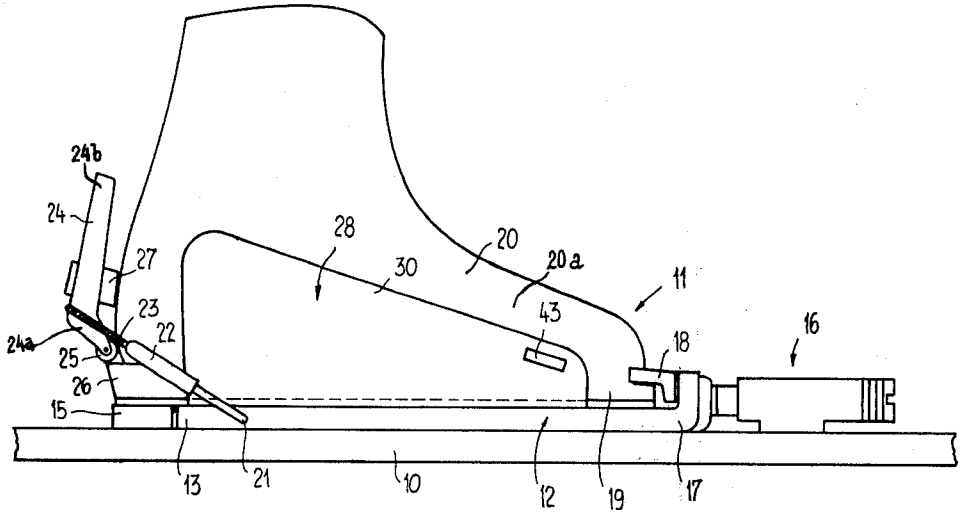

Fig. 1

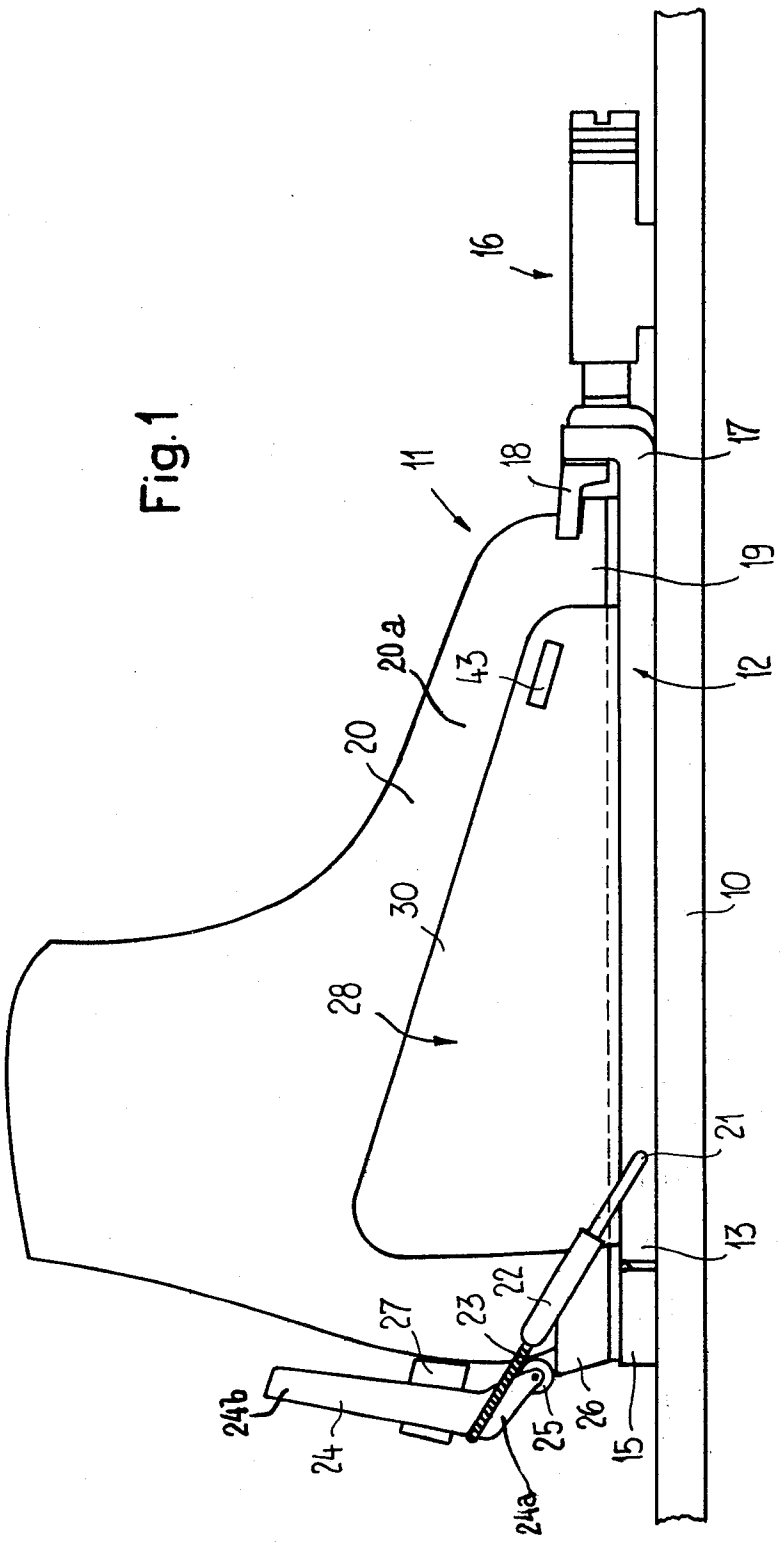

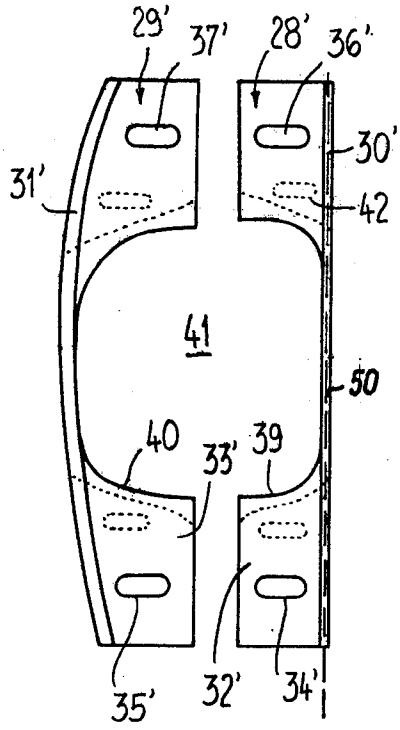
29'
37'
28'
36'
30'
31'
42
41
50
40
33'
39
35'
32'
34'

Fig.3

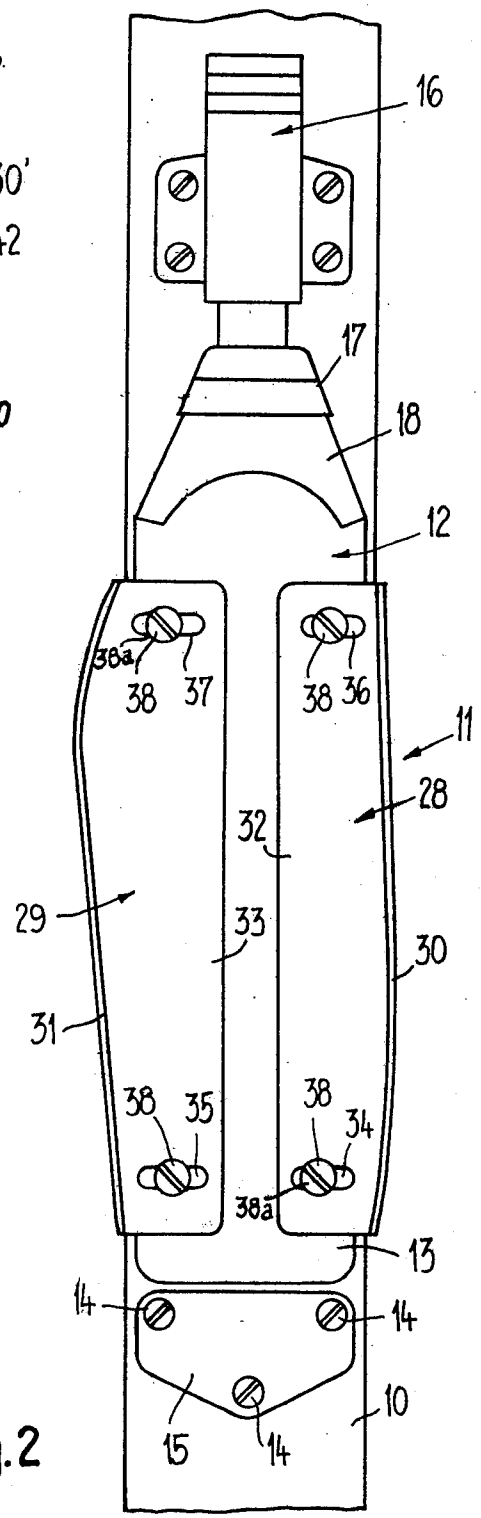
16
17
18
12
38a
38
37
38
36
11
28
32
29
33
30
31
38
35
38
34
38a
13
14
14
15
14
10

Fig.2

RELEASABLE SKI BINDING

BACKGROUND OF THE INVENTION

The present invention relates to a new and improved construction of releasable ski binding or safety ski binding, of the type incorporating a release plate which is releasably retained at the ski by locking elements which are to be anchored at the ski, the binding further incorporating clamping elements for clamping the sole of a ski boot.

With such type releasable ski bindings, as well as moreover also with releasable ski bindings functioning without a release plate, the ski boot is fixedly clamped at the ski, both at the tip and heel of the boot. Hence, the more or less planar tread surface of the ski boot sole then bears upon the support or standing surface of the binding. All of the forces which emanate from the foot of the skier during skiing and transmitted to the boot are therefore practically only transmitted to the ski via the tip and heel of the boot. The same is basically also the case for the lines of force in the reverse direction, especially when the skier falls, during which time the shoe is subjected to loads which, in this case, emanate from the ski. These circumstances of course place certain requirements on the ski boot as concerns its deformability. These requirements in turn and the attempt to have the transmission of forces occur without any delay in time and as correctly as possible as concerns the magnitude and direction thereof, however have resulted in the fact that modern day ski boots not only possess a bending-resistant or structurally stiff sole, but also a bending-resistant or stiff upper. Hence, it should be apparent that such type ski boots are not overly comfortable to wear when they are fixedly clamped at the ski. Furthermore, the modern day ski boots are also not very comfortable when simply walking, owing to the increased stiffness which they possess and the practically ever increasing weight thereof.

On the other hand, the older type ski boots, namely those having a flexible sole and a flexible upper, are only capable, if at all, of unsatisfacorily transmitting without any timedelay, the aforementioned type of forces between the foot and the ski via the binding.

SUMMARY OF THE INVENTION

Hence, it is a primary object of the present invention to provide an improved construction of releasable ski binding which overcomes the aforementioned drawbacks and limitations of the prior art proposals.

Another and more specific object of the present invention relates to a releasable ski binding of the previously mentioned type in which transmission of forces between the foot and ski can be carried out in all directions even when using a soft and lighter and therefore more comfortable ski boot, in particular a ski boot which also is relatively comfortable and suitable for walking.

The invention is based upon recognition of the following aspects: apart from the technological and costly expenditure, it is not really very sensible to construct ski boots so as to be increasingly stiffer and therefore increasingly heavier simply for the purpose of transmitting forces between the ski and the foot of the user, since such developments automatically lead to a reduction in the wearing comfort of the ski boot. This wearing comfort, on the other hand, only can be maintained by carrying out compromises and the latter in turn impair the transmission of forces.

Now in order to implement the above-mentioned objects, and others which will become more readily apparent as the description proceeds, the invention contemplates the provision of a releasable ski binding of the previously mentioned type, which is manifested by the features that there are provided lateral impact or abutment members at both lengthwise extending sides of the release plate and which lateral impact members protrude upwardly from the support surface of the release plate, and wherein each lateral impact member forms at least two lateral impact points for the ski boots to be clamped at the binding.

The lateral impact members are advantageously constructed in the form of angle members or angle pieces secured to the release plate. In such case, there can be secured a respective elongate or lengthwise extending angle member at each lengthwise extending side of the release plate, each such angle member having a side wall or check portion forming the stop or impact points. These angle members extend over the major portion of the spacing between the clamping elements at the release plate. In this way, there is insured that the elongate angle members form at least two stop or impact points.

It is further advantageous if the lateral stops at the one lengthwise extending side of the release plate are adjustable and fixable as concerns their spacing from the lateral stops at the other lengthwise extending side of the release plate. In this way the impact members not only can be accommodated to the particular type of ski boot which is encountered, but it is also possible to regulate the lateral pressure which the impact members exert upon the foot located in the associated ski boot. To this end the angle members also can be constructed so as to be adjustable and fixable with respect to the angle which they form between the lengthwise extent of their one side wall and the lengthwise extent of the release plate. An advantageous constructional embodiment of the invention, which is also suitable for converting existing releasable ski bindings, resides in the features that the angle members are secured to the release plate by clamping screws which engage through slots provided at the angle members. Consequently, the angle members can be secured to the top of the release plate and therefore together with their side walls which are parallel to such release plate, form a part of the support surface, or, however, the angle members can be secured to the underside of the release plate. Finally, the side walls or cheeks of each of the angle members can abut one another at hinges, whereby the one side wall or cheek can be tilted or pivoted from an operating position protruding upwardly from the release plate into a transport position where it bears against the support surface of the release plate.

BRIEF DESCRIPTION OF THE DRAWINGS

The invention will be better understood and objects other than those set forth above, will become apparent when consideration is given to the following detailed description thereof. Such description makes reference to the annexed drawings wherein:

FIG. 1 is a schematic side view of a portion of a ski having mounted thereat a releasable ski binding designed according to the present invention and a ski boot fixedly clamped thereon;

FIG. 2 is a schematic top plan view of the safety ski binding depicted in FIG. 1; and

FIG. 3 is a schematic top plan view of a set of angle members which can be mounted at the underside of a release plate.

DETAILED DESCRIPTION OF THE PREFERRED EMBODIMENTS

Describing now the drawings, in the exemplary embodiment of releasable ski binding or safety binding as depicted in FIGS. 1 and 2, such releasable ski bindings, designated in its entirety by reference character **11**, is mounted at the central region of a ski **10**. This releasable ski binding **11** possesses a release plate **12**, the rear end **13** of which engages beneath a rear locking element **15** anchored by means of screws **14** (FIG. 2) to the top of the ski **10**, engagement of the rear end **13** of the release plate **12** with the rear locking element **15** occurring in such a manner that it is possible to displace the release plate **12** in the plane of the ski after overcoming a holding or retaining force. At the front end **17** of the release plate **12** there engages a front locking element **16** which, for instance, can be of the type disclosed in U.S. Pat. 3,489,424, the disclosure of which is incorporated herein by reference, and to which reference may be readily had so that the same need not be further discussed.

At the front end **17** of the release plate **12** there is provided a clamping element in the form of a segment **18**. As best seen by referring to FIG. 1; this segment **18** engages over the protruding tip of the sole **19** of the ski boot **20**, so that the ski boot sole **19** is urged into contact with the support or standing surface of the release plate **12**. At the region of the rear end **13** of the release plate **12**, there is hinged, at location **21**, a bracket **23** which can be adjusted in length by means of a threaded nipple or sleeve **22**. At the apex or crown of the bracket **23** there is hingedly connected a flexed or angled clamping lever **24**. At one end **24a** of the clamping lever **24** there is mounted a clamping roller **25** which, as best seen by referring to FIG. **1**, engages over the rearwardly protruding heel **26** of the ski boot **20**, and therefore also presses the heel of the boot against the release plate **12**. The other end **24b** of the clamping lever **24** is constructed as a manual lever which must be manually operated when clamping the boot **20** and furthermore carries a buffer element or cushion **27** which bears at the heel portion of the ski boot **20** when such ski boot is fixedly clamped in the releasable binding **11**.

For the sake of preserving clarity in illustration in FIG. 2 the rear clamping element, which consists of the components **22, 23, 24** and **27**, has been conveniently omitted. At the top or upper surface of the release plate **12** there are secured two angle members or angle pieces **28** and **29**, wherein in FIG. **1** only the angle piece or angle member **28** is visible. Each of these angle members **28** and **29** have legs arranged at substantially right angles to one another, and specifically possesses a respective side wall or cheek **30** and **31** which protruder upwardly from the release plate **12** and a flat or planar side wall or cheek **32** and **33** respectively which bears against the top surface of release plate **12**. At each of the side walls or cheeks **32** and **33** there are formed two respective slots or elongate holes **34, 36** and **35, 37**, through which engages a respective clamping screw **38** which is fixedly threadably connected at the body of the release plate **12**. By means of the heads **38a** of these screws **38** the side walls or cheeks **32, 33** and therefore the angle members **28** and **29** are fixedly clamped at the release plate **12**. In order for the side walls to assume angular orientations with respect to the longitudinal ski axis, the slots are made curved or, alternatively, the screw shanks are smaller in diameter than the width of the slots.

From the showing of FIG. **1** it will be apparent that the outline of the upwardly protruding side walls or cheeks, especially the side wall **30**, is configured to ascend towards the rear of the binding. From the illustration of FIG. **2** it will be seen that, viewed from the top, the profile of each of the side walls or cheeks **30** and **31** is arched or curved towards the outside and viewed from the side is convex, so that the angle members **28** and **29** together with the release plate **12** form a type of container or trough open at the top, and which serves to receive the ski boot **20**. Moreover, in this regard the side walls **30** and **31** serve the purpose of bearing against the edges of the ski boot sole **19** or, however, against the side or lateral portions of the upper **20a** of the ski boot **20**.

With the illustrated exemplary embodiment of releasable ski binding, and even when such is used with ski boots having soft uppers, there thus occurs a transmission of the forces between the boot and the release plate not only exclusively via the clamping elements arranged at the tip and heel of the boot, but also via the angle members **28, 29** which form the rigid lateral impact members or stops. Additionally, it is possible with the illustrated binding, by suitably adjusting the angle members **28** and **29**, to readily accommodate their inner width i.e. the width of the container for the reception of the ski boot **20** to the individual wishes in the manner that the ski boot upper **20a** can be laterally pressed to a greater or lesser extent against the user's foot. Finally, from what has been disclosed above, it will be equally apparent that with the depicted embodiment of ski binding **11** there can be employed lightweight boots which are suitable for walking, and wherein there is insured that the user will have the feeling that he is receiving good support in the boot during such time as he has attached the boot means of the binding to the ski, and wherein furthermore, the skier is afforded the possibility, without having to change the boot, of walking with the boot much in the manner of a hiking boot.

Now in FIG. **3** there is shown in plan view a set of angle members or angle pieces **28'** and **29'** which are suitable for attachment to the underside of a release plate similar to the release plate **12** of FIGS. **1** and **2**. The outwardly protruding or upstanding sidewalls or cheeks **30'** and **31'** of both illustrated angle members **28'** and **29'** are hardly different in shape from the sidewalls or cheeks **30** and **31** of the embodiment of FIG. **2**. On the other hand, cutouts or recesses **39** and **40** are formed at the sidewalls **32'** and **33'** respectively, which come to lie beneath the release plate (not shown in FIG. **3** but as mentioned above like the release plate **12** of FIG. **2**), and such cutouts **39** and **40** collectively form a throughpassage or opening **41** for a pivot pin or pivot disk, by means of which the non-illustrated release plate bears upon the ski and therefore forms a well-defined point or axis of rotation in the event that the release plate, through rotation about a vertical axis, should be released from the locking elements **15, 16**. In

the event the angle members 28', 29' --as illustrated in full lines in FIG. 3-- are designed as onepiece members, then it is sufficient for the attachment thereof to be underside of the non-illustrated release plate to employ a set of two elongate holes 34', 36' and 35', 37' respectively. On the other hand, it is also possible to construct the angle members 28' and 29' so that each consists of two sections or parts, as such has been indicated in FIG. 3 with broken lines. In this case, it is advantageous if two elongate holes are provided at each of the thus-formed parts or sections, as the same has been indicated by reference character 42, for instance for the section appearing at the upper right of FIG. 3. In such case, each of the total of four angle piece sections (two at the left and two at the right) can be individually accommodated to the width of the ski boot momentarily employed.

The slot designated by reference character 43 in FIG. 1 and which is formed at the cheek side wall 30 of the angle member or angle piece 28, serves for the threading therethrough of an additional strap attachment or connection which engages over the cap or toe box of the ski boot 20. the angle members 28 and 29 therefore have a certain similarity to the jaws of the older type jaw bindings, although their function cannot be compared at all with such jaws. In reality, the jaws of the older type jaw bindings serve to fix the tip of the boot, which in the case of the illustrated binding of this development, is undertaken by the segment 18. With the illustrated inventive releasable ski binding, the angle members 28 and 29 exclusively serve the purpose, on the one hand, of adjusting the "inner width" of the space intended to receive the ski boot, and on the other hand, to insure for the transmission of the lateral forces to the release plate 12 without having to resort to the use of the segment 18, and finally also for protecting the outer surface of the upper of the ski boot 20 which, as stated, can be soft and pliable, against damage, for instance, by the edge of the neighboring ski.

Finally, it is mentioned that for each of the embodiments herein disclosed, and for instance as schematically illustrated in FIG. 3, the adjoining side walls or legs of each of the angle members can be connected by a hinge, generally indicated by reference character 50, so that the upstanding side walls, such as walls 30' and 31', can be selectively pivoted from an upwardly protruding operating position into a transport position where they bear against the support surface of the release plate. The hinge 50 prevents any movement of the side walls from the operating position outwardly while permitting inward movement to the transport position.

While there is shown and described present preferred embodiments of the invention, it is to be distinctly understood that the invention is not limited thereto, but may be otherwise variously embodied and practiced within the scope of the following claims. ACCORDINGLY,

What is claimed is:

1. A releasable ski binding having a release plate which can be releasably retained at the ski by locking elements anchored at the ski, clamping elements for clamping the sole of a ski boot having an upper to the binding, said release plate having a support surface and lengthwise extending sides, at both lengthwise extending sides of the release plate there are provided lateral impact members extending over the major portion of the length of the ski boot and protruding upwardly from the support surface of the release plate, means for rigidly yet adjustably securing said lateral impact members at the release plate, each of said lateral impact members forming at least two lateral impact points for engagement with the upper of the ski boot which is to be clamped at the binding, said lateral impact members cooperating with said release plate such that lateral forces acting upon the leg of the skier are transmitted by the skier's leg via the ski boot to the release plate through the lateral impact members.

2. The releasable ski binding as defined in claim 1, wherein the lateral impact members are constructed as rigid angle members each having a pair of legs extending substantially at right angles to one another and secured to the release plate.

3. The releasable ski binding as defined in claim 2, wherein said clamping elements comprise spaced clamping element members arranged at opposite ends of said release plate, a respective angle member of elongate configuration is attached at each of the lengthwise extending sides of the release plate, each of said angle members having a side wall defined by one of said legs thereof and forming an impact portion, and wherein each angle member extends over the major part of the spacing between the clamping elements.

4. The releasable ski binding as defined in claim 1, wherein said securing means includes means for adjusting the lateral impact member along one lengthwise extending side of the release plate in its spacing from the lateral impact member at the other lengthwise extending sides of the release plate and for mounting such angle member to be adjustable and fixable.

5. The releasable ski binding as defined in claim 3, each angle member having an upstanding side wall, said securing means including means for securing the angle members so as to be adjustable and fixable at the release plate so as to be able to adjust the angle formed between the lengthwise extent of their respective side wall and the lengthwise extent of the release plate.

6. The releasable ski binding as defined in claim 2, wherein said securing means is constituted by each of the angle members being provided with slot means on one leg, and clamping screw means engaging through said slot means to attach the angle members to the release plate so as to extend substantially in the lengthwise direction of said release plate.

7. The releasable ski binding as defined in claim 6, wherein each of the angle members have side walls defined by said legs thereof and are secured to the top surface of the release plate such that their side walls which are parallel to such top surface, form a part of the support surface of the release plate.

8. The releasable ski binding as defined in claim 6, wherein the angle members are secured to the underside of the release plate.

9. The releasable ski binding as defined in claim 2, wherein each of the angle members have side walls defined by the legs thereof and which abut one another, means for mounting one side wall of each angle member so that it can be pivoted from an operating position where it protrudes upwardly from the release plate into a transport position where it bears against the support surface of the release plate.

10. The releasable ski binding as defined in claim 2, wherein said release plate has a lengthwise axis, and two angle members are arranged at each lengthwise extending side of the release plate, each of said angle members having an upwardly protruding side wall defined by one of the legs thereof and mounted to be individually displaceable and fixable in a direction which is substantially transverse to the lengthwise axis of the release plate.

* * * * *