P. J. MESSER.

INTERMITTENT MECHANISM.

APPLICATION FILED AUG. 25, 1920.

1,435,319. Patented Nov. 14, 1922.

FIG. 1.

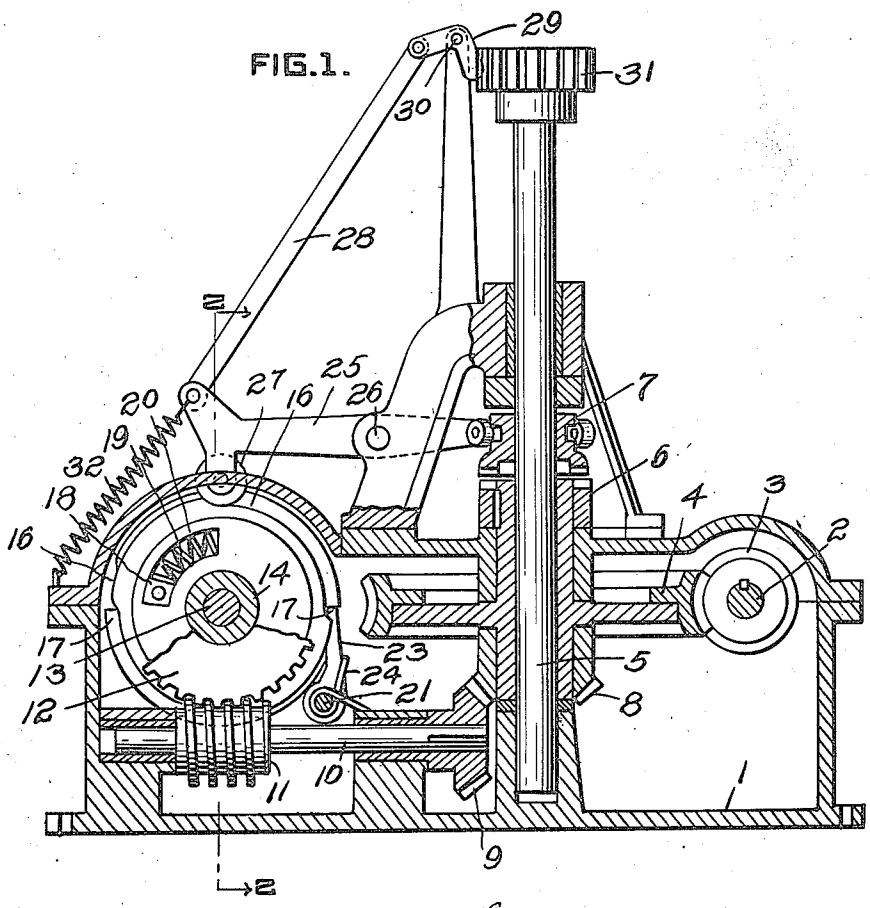

FIG. 3.

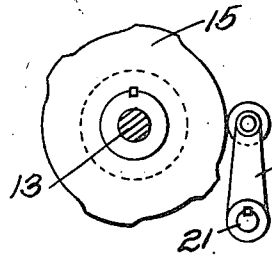

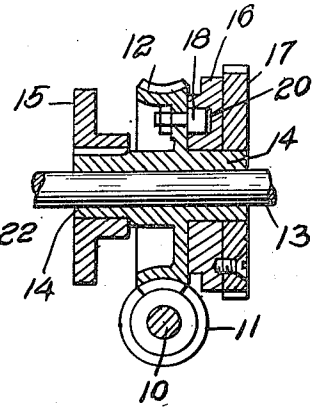

FIG. 2.

WITNESSES

J. Hebert Bradley

INVENTOR

Peter J. Messer

By Greenand McCallister

His attys.

Patented Nov. 14, 1922. 1,435,319

UNITED STATES PATENT OFFICE.

PETER J. MESSER, OF OLEAN, NEW YORK.

INTERMITTENT MECHANISM.

Application filed August 25, 1920. Serial No. 405,933.

To all whom it may concern:

Be it known that I, PETER J. MESSER, a citizen of the United States, and a resident of Olean, in the county of Cattaraugus and State of New York, have made a new and useful Improvement in Intermittent Mechanisms, of which the following is a specification.

My invention relates to intermittent driving mechanism and consists in means for alternately engaging and disengaging a constantly rotating member and a driven member. A typical installation of my mechanism is shown in a co-pending application bearing Serial No. 364,333, the mechanism shown therein, however, being adapted for many other devices.

The main object of this invention is to positively drive a driven element at intervals. Another object is to provide a quick and positive engagement and release of the driving and driven members. Another object is to positively lock the driven element against movement except when engaged by the driving element.

These objects are attained in the device disclosed in the accompanying drawings in which Figure 1 is a vertical section through the mechanism; Fig. 2 is a detail, vertical section taken at right angles to Fig. 1 on the line 2—2 of the same, and Fig. 3 is a detail view of some parts shown in Fig. 2 looking in the same direction as in Fig. 1 and also showing an additional element not shown in Fig. 1.

The mechanism is mounted in a frame 1 which journals a power shaft 2 driven by electric motor or other suitable means. Shaft 2 carries a worm 3 which drives a wheel 4 freely mounted on a vertical shaft 5 journaled in frame 1. The hub of wheel 4 extends upwardly and, at its upper end, fixedly mounts a clutch element 6 which is adapted to cooperate with a clutch element 7, splined to shaft 5, to rotatively lock wheel 4 to shaft 5.

Clutch elements 6 and 7 are engaged and disengaged at intervals and the clutch operating members are driven by the wheel 4 by means of a fixedly attached bevel pinion 8 at the lower end of its hub. Pinion 8 meshes with pinion 9 fixedly mounted upon a horizontal shaft 10 which is pivoted in frame 1 and carries a worm 11 which drives wheel 12. Wheel 12 is mounted on a horizontal shaft 13 and has a longitudinally extending hub 14 which projects in both directions along shaft 13 and forms bearings for a timing cam 15, a clutch cam 16 and a stop ratchet 17. Timing cam 15 is keyed to hub 14. Stop ratchet 17 is fixedly secured to clutch cam 16. Neither ratchet 17 or cam 16 is fixed to hub 14 but both are rotated by a stop 18, mounted on wheel 12, which engages one end of an arcuately disposed compressed spring 19, the other end of which spring bears against one end of an arcuate recess 20 in cam 16.

A rocker shaft 21 which extends parallel to the shaft 13, is journaled in frame 1 and has an arm 22 keyed to it and alined with cam 15. A pawl 23 is also keyed to shaft 21 in line with ratchet 17. A spring 24 pushes against pawl 23 so that the latter is in position to engage a tooth in ratchet 17 when the same is presented.

A lever 25 is pivoted to frame 1 at 26, its right hand end engaging a groove in clutch element 7 and its left hand end journaling a roller 27 alined with cam 16. A rod 28 is secured to the roller end of lever 25 and extends up and is connected to a stop latch 29 which is pivoted at 30 to a stationary pin which may be mounted on frame 1 or other convenient support. A toothed drum 31 is carried by shaft 5 and when latch 29 is engaged with the drum as shown in Fig. 1 it prevents rotation of the latter and the shaft due to momentum or other causes. A coil spring 32 pulls downward on the left hand end of lever 25 and maintains roller 27 in contact with cam 16.

Operation: The driving motor, shaft 2, wheel 4, worm 11, wheel 12 and cam 15 rotate continuously. Wheel 12, through stop 18 and spring 19, tends to rotate cam 16 and ratchet 17 in a clockwise direction and so functions until one of the teeth of the ratchet is engaged by pawl 23. This interrupts rotation of the ratchet and cam 16 and is the temporary position indicated in Fig. 1. The pull of spring 32 on lever 25 holds clutch element 7 in its upper position wherein the latter is disengaged from clutch element 6 so there is no rotating tendency for shaft 5.

Further rotation of wheel 12 compresses spring 19 and brings the rise on cam 15 against the roller on arm 22 which throws the latter, shaft 21 and pawl 23, thereby releasing ratchet 17. The energy stored in spring 19 quickly moves cam 16 so as

to bring its rise under roller 27, thereby raising the left hand end of lever 25 which releases drum 31 from latch 29 and engages clutch elements 6 and 7 with each other.

Pawl 23 will engage the next tooth on ratchet 17 and hold the same and cam 16 in clutch engaging position until cam 15 again throws the pawl out of engagement with the ratchet. Spring 19, having been compressed again, will quickly move cam 16, permitting lever 25 to drop and disengage the clutch elements. This cycle is repeated as long as the mechanism is operated.

It will be understood that the operation of the mechanism may be varied by changing the cams and the ratchet. Latch 29 and its connection to lever 25 may be omitted without affecting the operation of the remainder of the mechanism and other changes in the construction may be made without departing from the spirit of my invention.

I have not shown any machinery or apparatus to be actuated by my intermittent drive mechanism as such does not constitute any part of my invention. Shaft 5 may be extended, as shown in the above mentioned application, or may be connected by pinions, gears, belts or other means to the tool or article which it is desired to actuate.

I claim:—

1. In an intermittent driving mechanism, a driven shaft, a drive member, a device for locking said shaft and member together, an element operating said device, a locking cam controlling said element, a yieldable connection between said drive member and said cam, a ratchet fixed relative to said cam, a pawl adapted to engage said ratchet to stop movement of said cam, and means operated by said drive member for disengaging said pawl from said ratchet.

2. In an intermittent drive mechanism, a driven shaft, a constantly rotating drive member, clutch elements on said shaft and member, a lever adapted to engage and disengage said elements, a clutch cam adapted to operate said lever, a cam shaft upon which said cam is rotatably mounted, a lug fixedly mounted upon said shaft, a spring connecting said lug and said cam, a pawl adapted to engage said cam to prevent its movement, a rocker shaft upon which said pawl is mounted, a timing cam fixed upon said cam shaft and provided with a cooperating arm on said rocker shaft whereby said pawl is disengaged from said clutch cam.

3. In an intermittent driving mechanism, a driving clutch element, a driven clutch element, a cam adapted to engage said elements with each other or to disengage them from each other, a pawl adapted to lock said cam in clutch engaging position, and a cam adapted to release said pawl from cam locking position.

4. In an intermittent driving mechanism, a driving clutch element, a driven clutch element, a cam adapted to engage said elements with each other or to disengage them from each other, a pawl adapted to lock said cam in position to disengage said clutch elements from each other, and a cam adapted to release said pawl from cam locking position.

5. In combination with a driving clutch element and a driven clutch element, a cam for alternately engaging and disengaging said elements with and from each other, a latch for locking said cam in either alternate position, a cam adapted to release said catch at intervals and means for quickly moving said first mentioned cam from one position to another when said catch is released.

6. In an intermittent driving mechanism, a shaft, a rotating clutch element freely mounted thereon, a clutch slidably but non-rotatively mounted on said shaft, a pivoted lever adapted to move on its pivot to engage said clutch elements with each other or to disengage them from each other, a latch operated by said lever towards said shaft when said clutch elements are disengaged and away from said shaft when said clutch elements are engaged, and means on said shaft adapted to be engaged by said latch when it moves towards said shaft.

In testimony whereof, I have hereunto subscribed my name this 21 day of August, 1920.

PETER J. MESSER.