(12) UK Patent Application (19) GB (11) 2 397 088 (13) A

(43) Date of A Publication 14.07.2004

(21) Application No: 0306009.2

(22) Date of Filing: 17.03.2003

(30) Priority Data:
(31) 10248334 (32) 09.01.2003 (33) US

(71) Applicant(s):
Lear Corporation
(Incorporated in USA - Delaware)
21557 Telegraph Road, Southfield,
Michigan 48034, United States of America

(72) Inventor(s):
Mitchell D Clauson

(74) Agent and/or Address for Service:
Urquhart-Dykes & Lord LLP
New Priestgate House, 57 Priestgate,
PETERBOROUGH, PE1 1JX,
United Kingdom

(51) INT CL[7]:
B60R 13/02 // B60J 5/04

(52) UK CL (Edition W):
E1J JGS

(56) Documents Cited:
JP 110240388 A
JP 2002079890 A
US 6095594 A
US 4388355 A

(58) Field of Search:
UK CL (Edition V) E1J
INT CL[7] B60J, B60R
Other:

(54) Abstract Title: **Vehicular door trim**

(57) A door trim member 14 for a vehicle door 12 comprises a rigid sheet 16 with at least one resilient clip fastener 24 extending therefrom. The clip fasteners 24 and rigid sheet 16 are integral with each other. The clip fasteners 24 are inserted into apertures 22 formed in the vehicle door 12 to attach the door trim member 14 to the door 12. Each clip fastener 24 may comprise a first 26 and a second 26' protrusion having a centreline 28 therebetween. Each protrusion 26, 26' may comprise an extension portion 30 and a tip portion 32 extending from the extension portion 30, the tip portion 32 has a fastening end 34 proximal to the extension portion 30 and a locating end 36 distal to the fastening end 34. The tip portion 32 may taper towards the centreline 28 from the fastening end 34 to the locating end 36. A door assembly 10 is also provided comprising a vehicle door 12 having apertures 22 and a trim member 14 as described above. Each aperture 22 may be sized so as to allow a snap fit engagement with one of the clip fasteners.

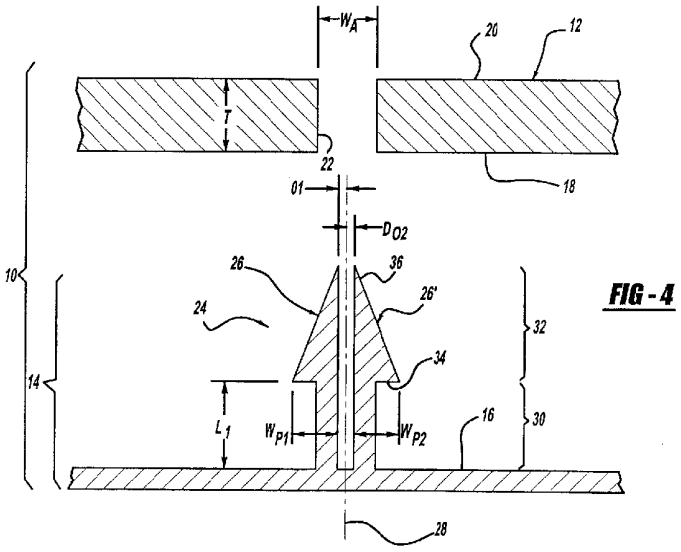

FIG - 4

GB 2 397 088 A

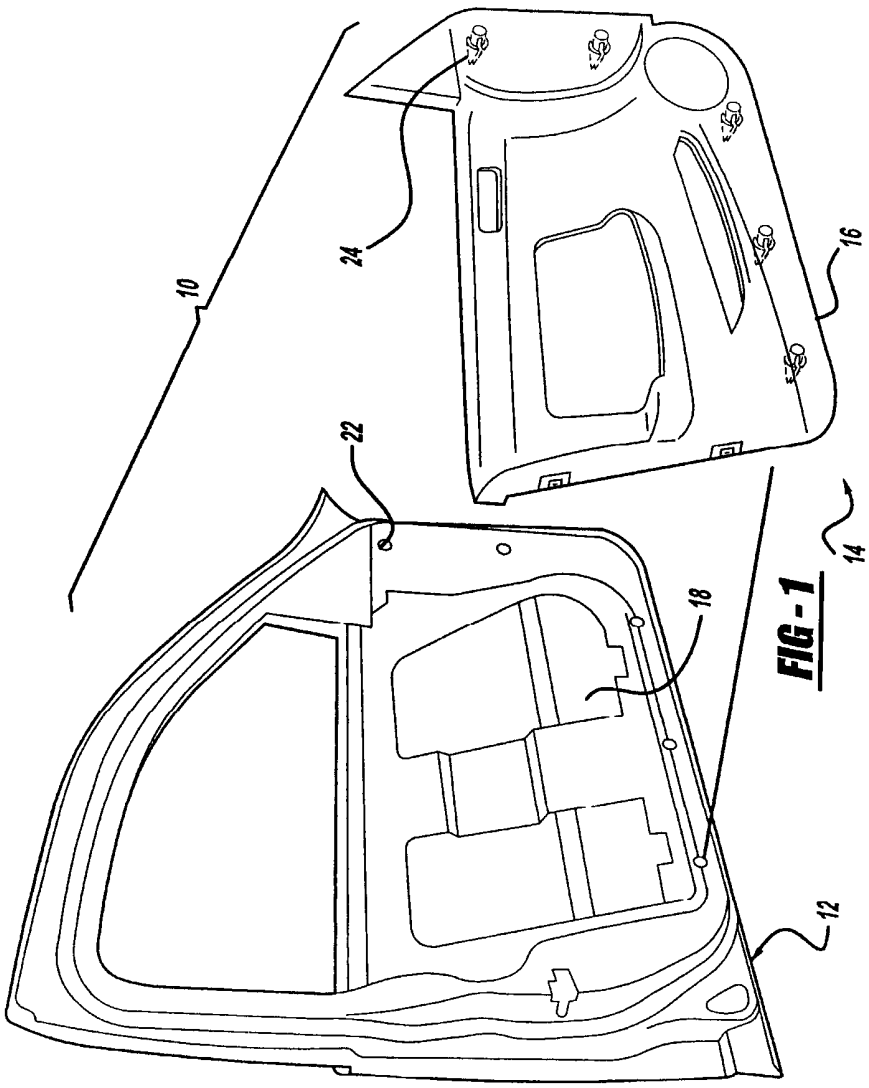

FIG - 1

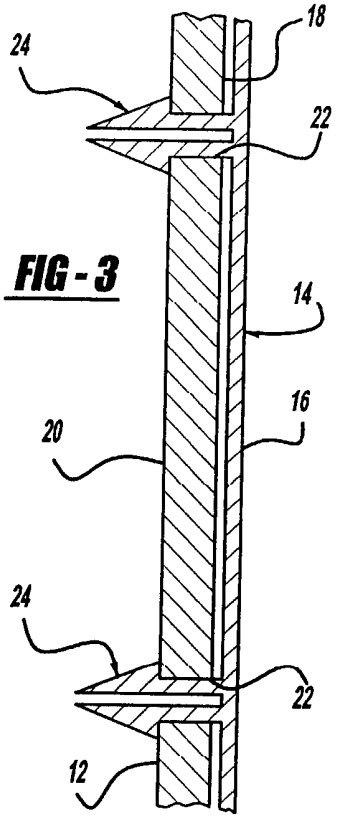

FIG - 3

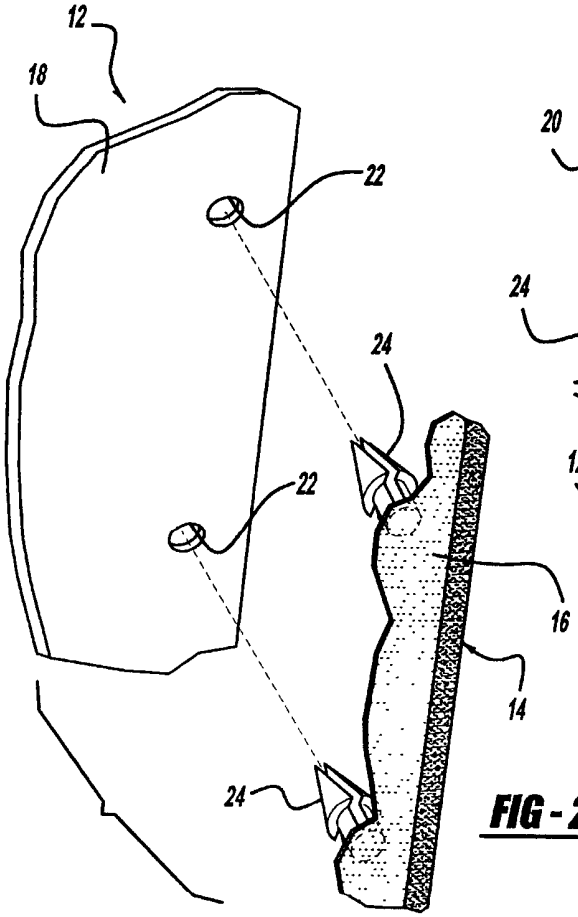

FIG - 2

FIG - 4

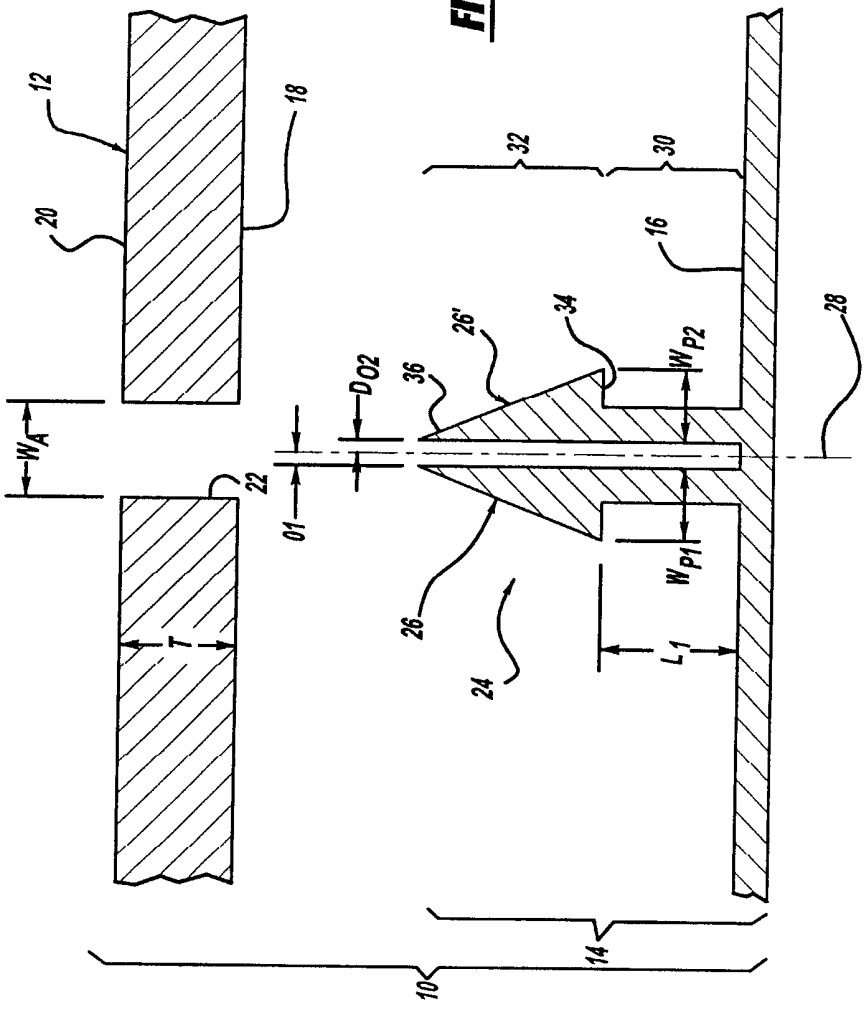

414

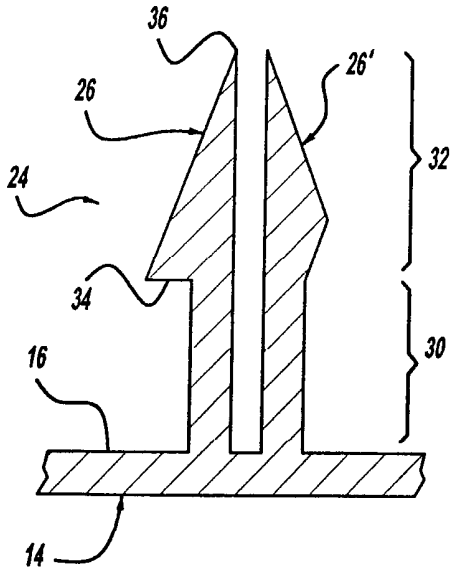

FIG - 5

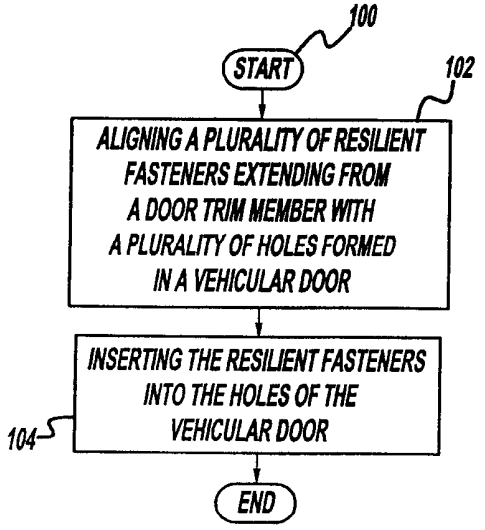

FIG - 6

VEHICULAR DOOR TRIM HAVING A MOLDED-IN SUBSTRATE FASTENER

TECHNICAL FIELD

The present invention relates generally to door assemblies of automotive vehicles, and more particularly to a door trim member that decreases the manufacturing cycle time of door assemblies and the costs associated therewith.

BACKGROUND OF THE INVENTION

Door assemblies of automotive vehicles are well known. These door assemblies typically include one or more door panels that are attached to a door. Specifically, the door panels and the door usually have a series of holes formed therein that are intended to receive a series of retaining fasteners.

Typical manufacture of these door assemblies requires that a substantial number of the retaining fasteners are first inserted into the holes formed within the door panel so as to attach the fasteners to that door panel. Subsequently, each door panel is aligned with its respective door such that the retaining fasteners on the door panel are aligned with the holes formed in the door. Thereafter, these retaining fasteners are inserted into those holes and fixedly coupled to the door. As a result, the door panel is fixedly attached to the door.

A drawback of these door assemblies is that the use of a substantial number of retaining fasteners and the insertion of each of those fasteners into the holes collectively increase the manufacturing cycle time, as well as the costs associated therewith.

Therefore, a need exists for a door trim member having

a construction that decreases the manufacturing cycle time of door assemblies as well as the costs associated therewith.

SUMMARY OF THE INVENTION

According to the present invention there is provided a vehicular door trim member, and a vehicular door assembly as described in the accompanying claims. There is also provided a method of assembling such a vehicular door assembly as also described in the accompanying claims.

An embodiment provides a vehicular door trim member for attachment to an inner door of a vehicle. The vehicular door trim member is defined by a rigid sheet with one or more resilient clip fasteners extending therefrom. These resilient clip fasteners and the rigid sheet comprise an integral one-piece construction. Moreover, these resilient clip fasteners are intended to be inserted into respective apertures formed within the door for the purpose of attaching the vehicular door trim member to the door.

One advantage of the present invention is the provision of a vehicular door trim member having resilient clip fasteners integrally formed therein, which decreases the manufacturing cycle time and the costs associated therewith.

Another advantage of the present invention is the provision of a vehicular door trim member having fasteners with tapered tip portions integrally formed therein, which further decreases the requirement for precise tooling coordination thereby further decreasing the manufacturing cycle time and the costs associated therewith.

Other advantages of the present invention will become

apparent when viewed in light of the detailed description of the preferred embodiment when taken in conjunction with the attached drawings and appended claims.

BRIEF DESCRIPTION OF THE DRAWINGS

For a more complete understanding of this invention, reference should now be made to the embodiments illustrated in greater detail in the accompanying drawings and described below by way of examples of the invention:

FIGURE 1 is an exploded perspective view of a vehicular door assembly, in accordance with one embodiment of the present invention;

FIGURE 2 is a partially cutaway view of the vehicular door assembly shown in FIGURE 1;

FIGURE 3 is a cross-sectional view of the vehicular door assembly shown in FIGURE 2;

FIGURE 4 is an enlarged cross-sectional view of the vehicular door assembly shown in FIGURE 3, depicting the structure of a resilient clip fastener and an aperture of the assembly;

FIGURE 5 is a cross-sectional view of a resilient clip fastener, in accordance with another embodiment of the present invention; and

FIGURE 6 is a logic flow diagram representing a method for manufacturing a vehicular door assembly, in accordance with one embodiment of the invention.

DETAILED DESCRIPTION OF THE INVENTION

In the following figures, the same reference numerals are used to identify the same components in the various views. The present invention is particularly suited for a door trim member of a vehicular door. However, it is understood that the present invention may be suited for various other components within the door.

Referring to Figures 1-3, there is shown an exploded view a vehicular door assembly 10 according to one embodiment of the invention. The door assembly 10 includes an inner door 12 and a door trim member 14 for attachment to the inner door 12. The door trim member 14 is defined by a rigid sheet 16 of molded material. In one embodiment, this door trim member 14 is a door trim pad that is injection molded. However, it is understood that the rigid sheet 16 can be a variety of other suitable door trim members that are formed by compression molding, casting, or various other suitable manufacturing processes. Moreover, the rigid sheet 16 can also form a housing for various devices for integration within the door 12.

The inner door 12 has an interior surface 18 directed toward the passenger cabin of the vehicle and an exterior surface 20 (as shown in Figures 3 and 4) positioned opposite to the interior surface 18. The inner door 12 is comprised of sheet metal. However, it is understood that the inner door may be comprised of various other suitable materials as desired. This door 12 has a series of apertures 22 formed therein extending between its interior surface 18 and its exterior surface 20. These apertures 22 are intended to receive one or more resilient clip fasteners 24 extending from the door trim member 14 for the purpose of attaching the door trim member 14 to the interior surface 18 of the inner door 12. The resilient clip fasteners 24 are detailed

in the description for Figures 4 and 5.

Although Figure 1 illustrates five apertures 22 and five resilient clip fasteners 24, it is understood that more or less than five of each can be utilized as desired. In addition, notwithstanding the illustration of circular apertures 22 in Figure 2, it is understood that these apertures may instead be oval, polygon, or various other suitable shapes.

Referring now to Figure 4, there is shown an enlarged and exploded cross-sectional view of the inner door 12 and the door trim member 14 with one of the resilient clip fasteners 24 extending therefrom.

Each resilient clip fastener 24 includes two or more protrusions 26, 26' extending from the door trim member 14 with a centerline 28 located between the protrusions 26, 26'. Each protrusion 26, 26' includes a resilient extension portion 30 extending from the door trim member 14 and a tip portion 32 extending from the resilient extension portion 30. The resilient extension portions 30 are intended to allow the protrusions 26, 26' to bend toward the centerline 28 so as to permit the resilient clip fastener 24 to pass through the aperture 22. Furthermore, once the tip portion 32 is passed through the aperture 22, the resilient extension portions 30 are intended to bend the protrusions 26, 26' away from the centerline so as to engage the tip portions 32 to the door 12.

These tip portions 32 each include a fastening end 34 that is located adjacent to the resilient extension portion 30 and a locating end 36 that is positioned distal to the fastening end 34. Specifically, the tip portions are

semi-conical and taper in thickness from the fastening end 34 to the locating end 36. However, it is understood that the tip portions can have various suitable shapes other than semi-conical as desired.

The locating ends 36 of the protrusions 26, 26' are substantially narrow and proximal to the centerline 28 for the purpose of facilitating insertion of the resilient clip fastener 24 into the aperture 22. The locating ends 36 allow the resilient clip fastener 24 to be inserted into the aperture 22 without first having to align the centerline 28 of the fastener 24 with the center of the aperture 22.

Moreover, the fastening ends 34 of the tip portions 32 are intended to engage the exterior surface 20 of the door 12 so as to fixedly attach the door trim member 14 to the door 12. This engagement is caused by the resilient extension portions 30 forcing the tip portions 32 laterally outward after the tip portions 32 have passed through the aperture 22.

The resilient clip fastener 24 and the aperture 22 are sized according to particular equations or relationships that exist between the two constructions for the purpose of accomplishing a snap-fit engagement therebetween.

Specifically, the aperture 22 has a minimum width (W_A) that is greater than the sum of the maximum offset distances (D_{O1}, D_{O2}). This relationship is intended to allow the entire resilient clip fastener 24 to be inserted into the aperture 22. The offset distances (D_{O1}, D_{O2}) are the distances between the locating end 36 of each protrusion 26, 26' and the centerline 28. This relationship is shown by the following equation:

$$W_A > D_{O1} + D_{O2}$$

Furthermore, the minimum width (W_A) of the aperture 22 also is greater than the sum of the maximum lateral widths (W_{P1}, W_{P2}) of the protrusions 26, 26'. This relationship is demonstrated by the following equation:

$$W_A > W_{P1} + W_{P2}$$

This construction is beneficial because it allows the fastener 24 to be sized sufficiently small for passing through the aperture 22 as the door 12 forces the protrusions 26, 26' laterally against each other toward the centerline 28.

Moreover, the minimum width (W_A) of the aperture 22 is less than the sum of the maximum offset distances (D_{O1}, D_{O2}) and the maximum lateral widths (W_{P1}, W_{P2}). This relationship allows the resilient clip fastener 24 to contact the inner door 12 and engage its exterior surface 20. This relationship is exemplified by the following equation:

$$W_A < D_{O1} + D_{O2} + W_{P1} + W_{P2}$$

Additionally, each resilient extension portion 30 of the protrusions 26, 26' has a length (L) that is greater than the thickness (T) of the door 12. This construction allows the fastening ends 34 of the protrusions 26, 26' to slide across the exterior surface 20 of the door 12 laterally outward from the centerline 28. As a result, the fastening ends 34 of the fastener 24 engage the door 12 so as to secure the door trim member 14 to the door 12. This straightforward relationship is demonstrated by the following equation:

$L > T$

Although Figure 4 illustrates the protrusions 26, 26' having similar structures, it is also understood that one protrusion 26 can have a different structure than another protrusion 26' (as exemplified in Figure 5). Additionally, it is understood that more than two protrusions 26, 26' maybe utilized as desired.

The door trim member 14 with the resilient clip fasteners 24 integrated therein allows for relatively quick and simple attachment of the door trim member 14 to the inner door 12. Specifically, the one-piece construction eliminates the need to fasten a substantial number of separate individual fasteners to the door trim member 14. The door assembly can be assembled by merely aligning the locating ends 36 of the resilient clip fasteners 24 with the apertures 22 formed in the inner door 12.

Moreover, the door trim member 14 can be removed from the door 12 by first forcing the protrusions 26, 26' toward the centerline 28 and positioning the fastening ends 34 of the resilient clip fastener 24 within the width of the aperture 22. Thereafter, the door trim member 14 can be pulled away from the door 12 and detached therefrom. A simple tool, e.g. a screwdriver, can be utilized to force the protrusions 26, 26' together and remove the door trim member 14 from the door 12.

Referring now to Figure 6, there is shown a logic flow diagram representing a method for manufacturing the door assembly 10, according to one embodiment of the present invention. The method commences in step 100 and immediately proceeds to step 102.

In step 102, the door trim member 14 is aligned with the inner door 12 so as to align the locating ends 36 of each fastener 24 in the respective apertures 22 formed within the inner door 12. However, it is also understood that the inner door 12 can instead be aligned with the door trim member as desired. This step is accomplished by a motorized device that is controlled by a controller. Alternatively, this step can also be accomplished manually by an individual. After the door trim member 14 is aligned with the inner door 12, the sequence proceeds to step 104.

In step 104, the door trim member 14 is forced against the inner door 12 so as to insert the resilient clip fasteners 24 into the respective apertures 22 within the inner door 12. In so doing, the door 12 bends the protrusions 26, 26' of each fastener 24 toward the centerline 28. As the tip portions 32 of the fasteners 24 completely pass through the apertures 22, the resilient extension portions 30 cause the fastening ends 34 to slide across the exterior surface 20 of the door 12 and engage those ends 34 to that surface 20.

While particular embodiments of the invention have been shown and described, numerous variations and alternate embodiments will occur to those skilled in the art. Accordingly, it is intended that the invention be limited only in terms of the appended claims.

CLAIMS

1. A vehicular door trim member for attachment to a door of a vehicle, comprising:

a rigid sheet defining the vehicular door trim member; and

at least one resilient clip fastener extending from said rigid sheet, said at least one resilient clip fastener being an integral part of said rigid sheet and intended to be inserted into at least one aperture formed within the door so as to couple the vehicular door trim member to the door.

2. The vehicular door trim member of claim 1 wherein said rigid sheet and said at least one resilient clip fastener comprise a one-piece molded construction.

3. The vehicular door trim member of claim 1 or 2 wherein each of said at least one resilient clip fastener comprises at least two protrusions that extend from said rigid sheet.

4. The vehicular door trim member of claim 3 wherein said at least two protrusions include a first protrusion and a second protrusion with a centerline positioned therebetween.

5. The vehicular door trim member of claim 4 wherein said first protrusion and said second protrusion each comprise:

a resilient extension portion extending from said rigid sheet and capable of bending toward said centerline; and

a tip portion extending from said resilient extension portion, said tip portion having a fastening end that is proximal to said resilient extension portion and a locating end that is distal to said fastening end, said tip portion

tapering in thickness toward said centerline substantially from said fastening end to said locating end.

6. The vehicular door trim member of claim 5 wherein said tapering portion of each of said first protrusion and said second protrusion have a maximum lateral width, each of said at least one aperture having a minimum aperture width thereacross that is greater than the sum of said maximum lateral width of each of said first protrusion and said second protrusion.

7. The vehicular door trim member of claim 5 or 6 wherein said tip portion of each of said first protrusion and said second protrusion each are positioned at a maximum offset distance from said center line, said minimum aperture width being greater than the sum of said maximum offset distance of each of said first protrusion and said second protrusion.

8. The vehicular door trim member of any one of claims 5 to 7 wherein said resilient extension portion of each of said first protrusion and said second protrusion have a minimum length, said minimum length being at least an aperture depth that is measured from an interior surface of the door to an outer surface of the door.

9. A vehicular door assembly comprising:

a door having an interior surface and an outer surface with at least one aperture extending from said interior surface to said outer surface;

a rigid sheet defining a vehicular door trim member having; and

at least one resilient clip fastener extending from said rigid sheet, said at least one resilient clip fastener being an integral part of said rigid sheet and intended to

be inserted into said at least one aperture within said door so as to couple said vehicular door trim member to said door.

10. The vehicular door assembly of claim 9 wherein said door is comprised of sheet metal.

11. The vehicular door assembly of claim 9 or 10 wherein said rigid sheet and said at least one resilient clip fastener comprise a one-piece molded construction.

12. The vehicular door assembly of any one of claims 9 to 11 wherein each of said at least one resilient clip fastener comprises at least two protrusions that extend from said rigid sheet.

13. The vehicular door assembly of claim 12 wherein said at least two protrusions include a first protrusion and a second protrusion with a centerline positioned therebetween.

14. The vehicular door assembly of claim 13 wherein said first protrusion and said second protrusion each comprise:

a resilient extension portion extending from said rigid sheet and capable of bending toward said centerline; and

a tip portion extending from said resilient extension portion, said tip portion having a fastening end that is proximal to said resilient extension portion and a locating end that is distal to said fastening end, said tip portion tapering in thickness toward said centerline substantially from said fastening end to said locating end.

15. The vehicular door assembly of claim 14 wherein said tapering portion of each of said first protrusion and said second protrusion have a maximum lateral width, each of said

at least one aperture having a minimum aperture width thereacross that is greater than the sum of said maximum lateral width of each of said first protrusion and said second protrusion.

16. The vehicular door assembly of claim 14 or 15 wherein said tip portion of each of said first protrusion and said second protrusion are offset at a maximum offset distance from said center line, said minimum aperture width being greater than the sum of said maximum offset distance of each of said first protrusion and said second protrusion.

17. The vehicular door assembly of claim 16 wherein said minimum aperture width is less than the sum of:

said maximum lateral width of each of said first protrusion member and said second protrusion member; and

said maximum offset distance of each of said first protrusion member and said second protrusion member.

18. The vehicular door assembly of claim 17 wherein said resilient extension portion has a minimum length, said minimum length being equal to at least an aperture depth that is measured from said interior surface of the door to said outer surface of the door.

19. A method for assembling a vehicular door assembly comprising:

aligning said at least resilient clip fastener as of said rigid sheet as recited in claim 1 with said at least one aperture of said door as recited in claim 1; and

inserting said at least one resilient clip fastener into said at least one aperture.

20. The method of claim 19 wherein inserting said at least

one resilient clip fastener comprises bending said first protrusion and said second protrusion as recited in claim 4 toward said centerline as recited in claim 4.

21. A vehicular door trim substantially as hereinbefore described with reference to and/or as shown in the accompanying figures.

22. A vehicular door assembly substantially as hereinbefore described with reference to and/or as shown in the accompanying figures.

23. A method of assembling a vehicular door trim assembly substantially as hereinbefore described with reference to and/or as shown in the accompanying figures.

Application No:	GB 0306009.2	**Examiner:**	Eleanor Wade
Claims searched:	1-20	**Date of search:**	7 August 2003

Patents Act 1977 : Search Report under Section 17

Documents considered to be relevant:

Category	Relevant to claims	Identity of document and passage or figure of particular relevance	
X	1-20	US 4388355	Daimler Benz
X	1,2, 9-11,19	US 6095594	Textron Automotive
A	1,2, 9-11,19	JP 2002079890	Kasai Kogyo
A	1-20	JP 11240388	Kasai Kogyo

Categories:

X	Document indicating lack of novelty or inventive step	A	Document indicating technological background and/or state of the art
Y	Document indicating lack of inventive step if combined with one or more other documents of same category.	P	Document published on or after the declared priority date but before the filing date of this invention.
&	Member of the same patent family	E	Patent document published on or after, but with priority date earlier than, the filing date of this application

Field of Search:

Search of GB, EP, WO & US patent documents classified in the following areas of the UKC[V]:

E1J

Worldwide search of patent documents classified in the following areas of the IPC[7] :

B60R, B60J

The following online and other databases have been used in the preparation of this search report :

EPODOC, JAPIO, WPI