Sept. 25, 1951 R. N. THOMPSON 2,569,266

RIB CURVING MACHINE

Filed Oct. 25, 1946 5 Sheets-Sheet 1

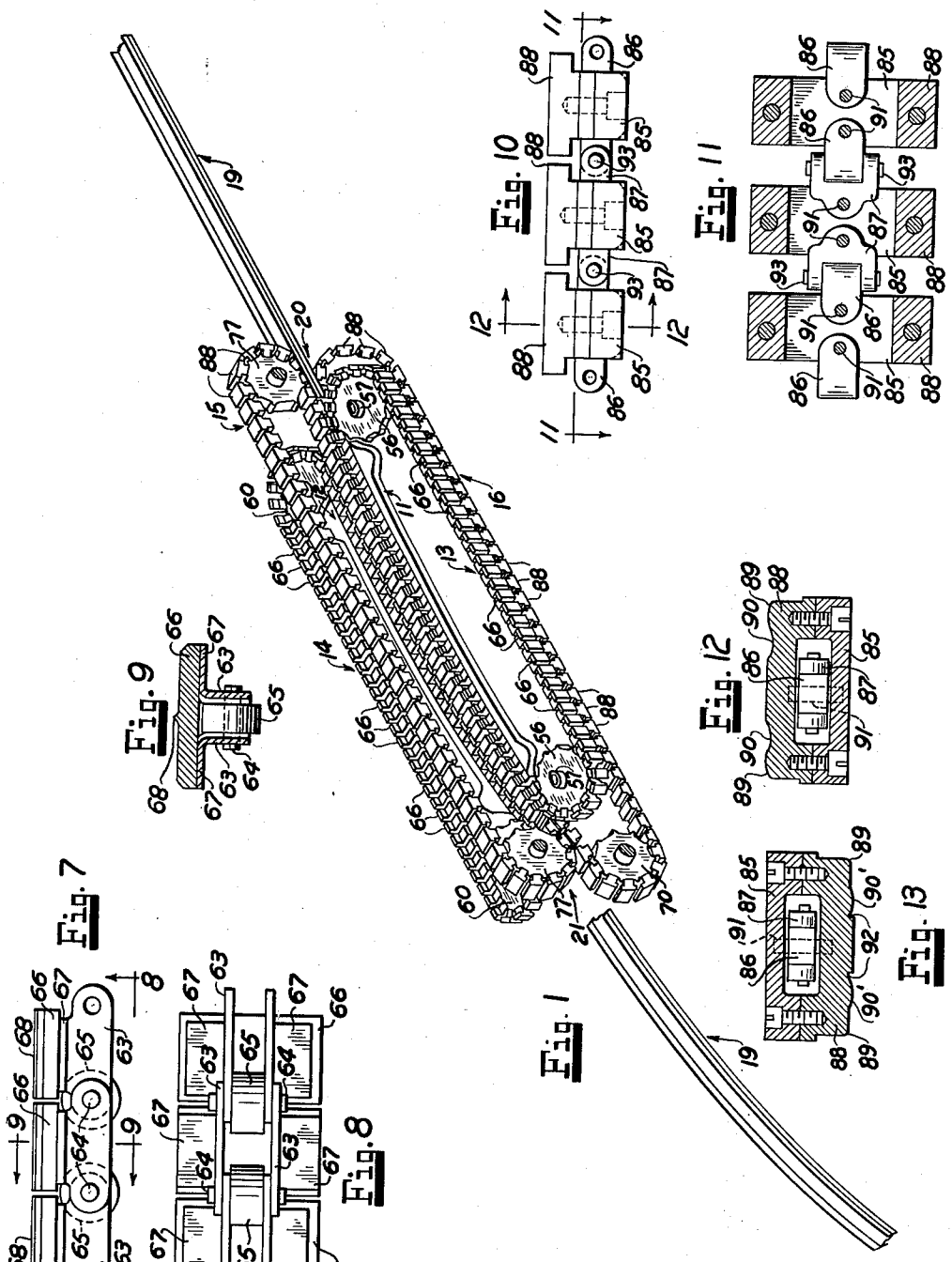

INVENTOR.
RALPH N. THOMPSON.

BY James J. Sleavey
ATTORNEY.

Sept. 25, 1951 R. N. THOMPSON 2,569,266

RIB CURVING MACHINE

Filed Oct. 25, 1946 5 Sheets-Sheet 2

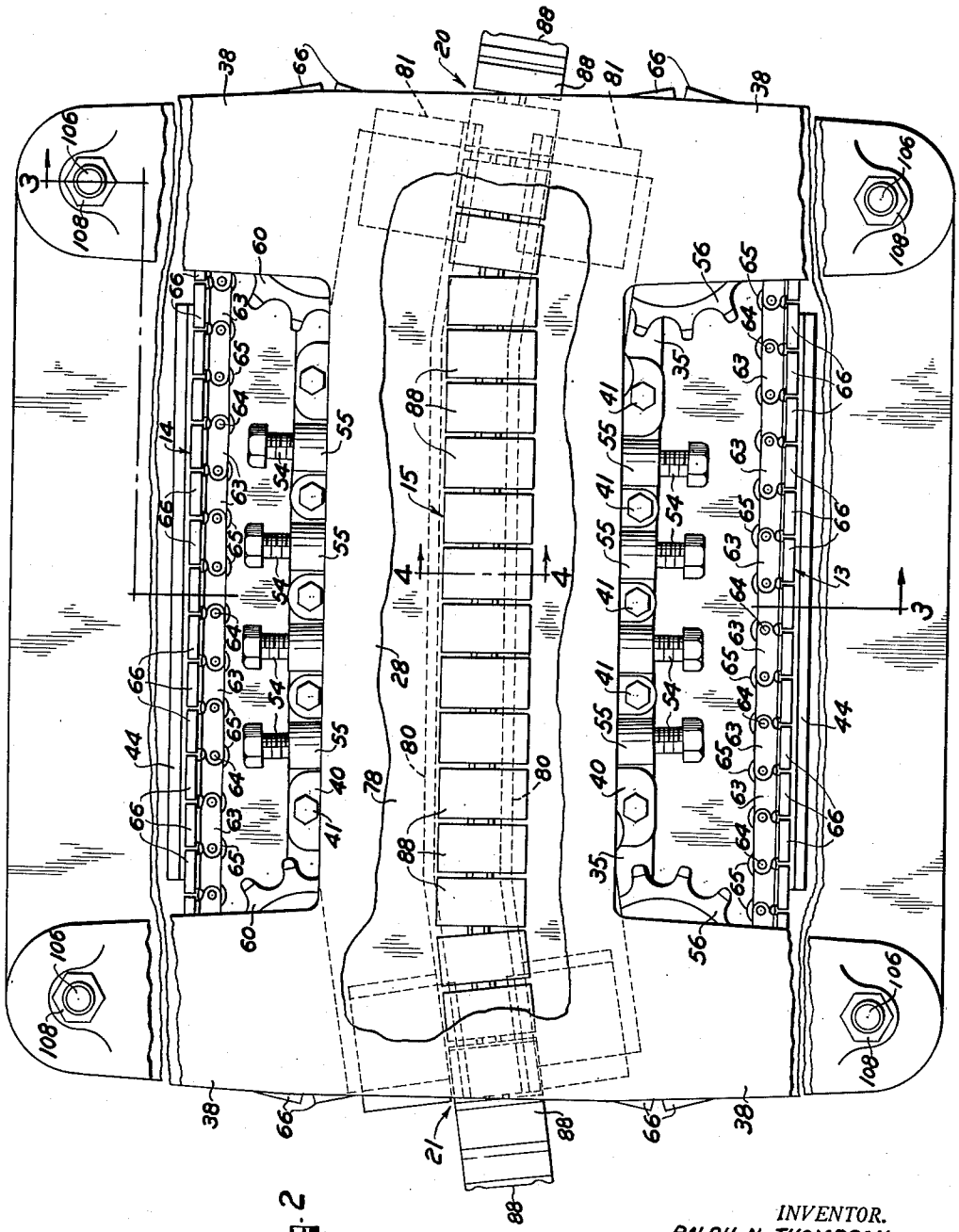

Fig. 2

INVENTOR.
RALPH N. THOMPSON.
BY James J. Chaney
ATTORNEY.

Sept. 25, 1951 R. N. THOMPSON 2,569,266

RIB CURVING MACHINE

Filed Oct. 25, 1946 5 Sheets-Sheet 3

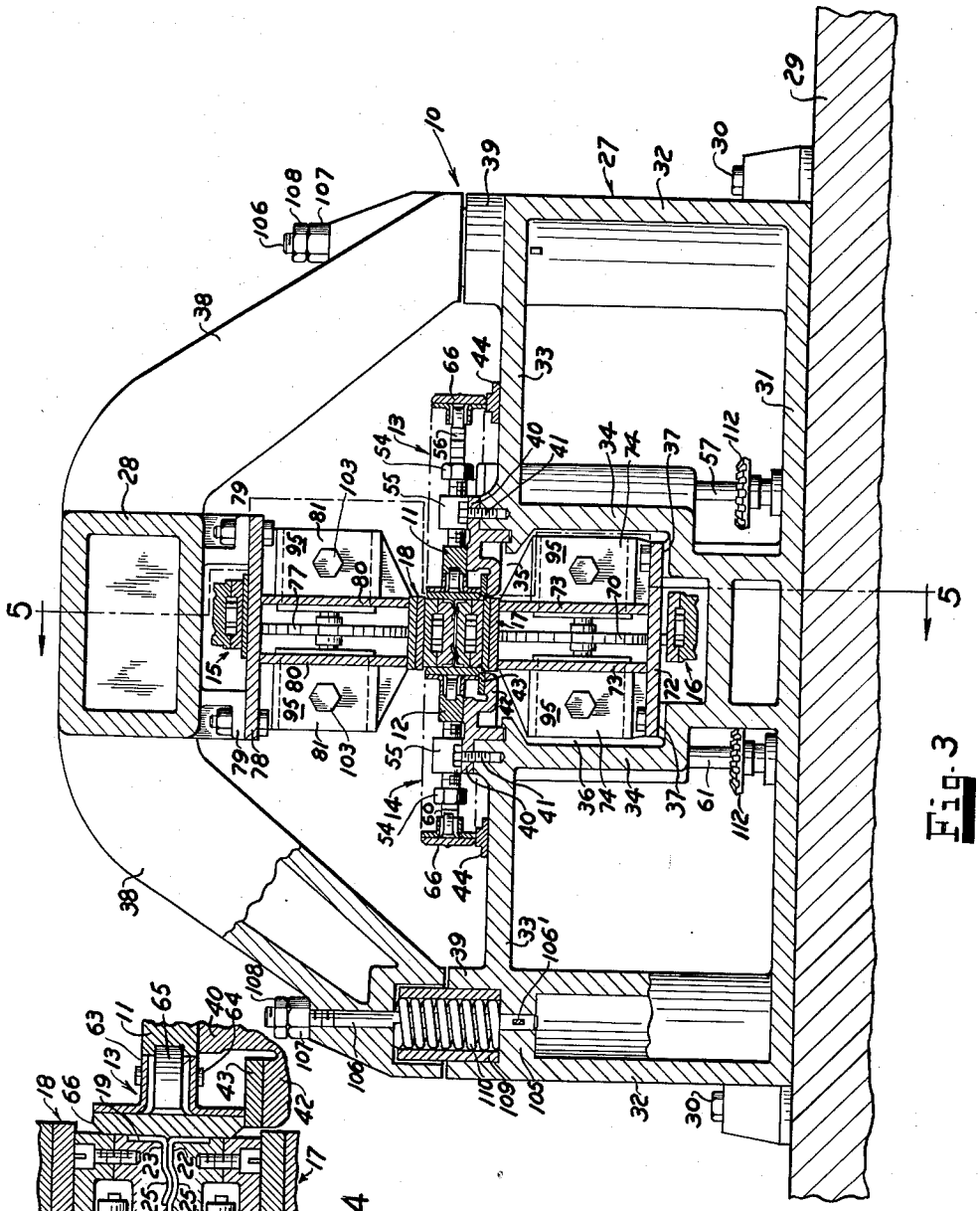

Fig. 3

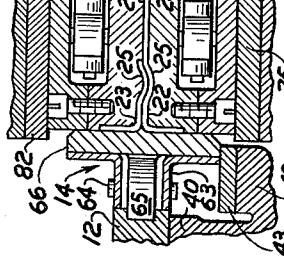

Fig. 4

INVENTOR.
RALPH N. THOMPSON.
BY James J. Shanley
ATTORNEY.

Sept. 25, 1951 R. N. THOMPSON 2,569,266

RIB CURVING MACHINE

Filed Oct. 25, 1946 5 Sheets-Sheet 4

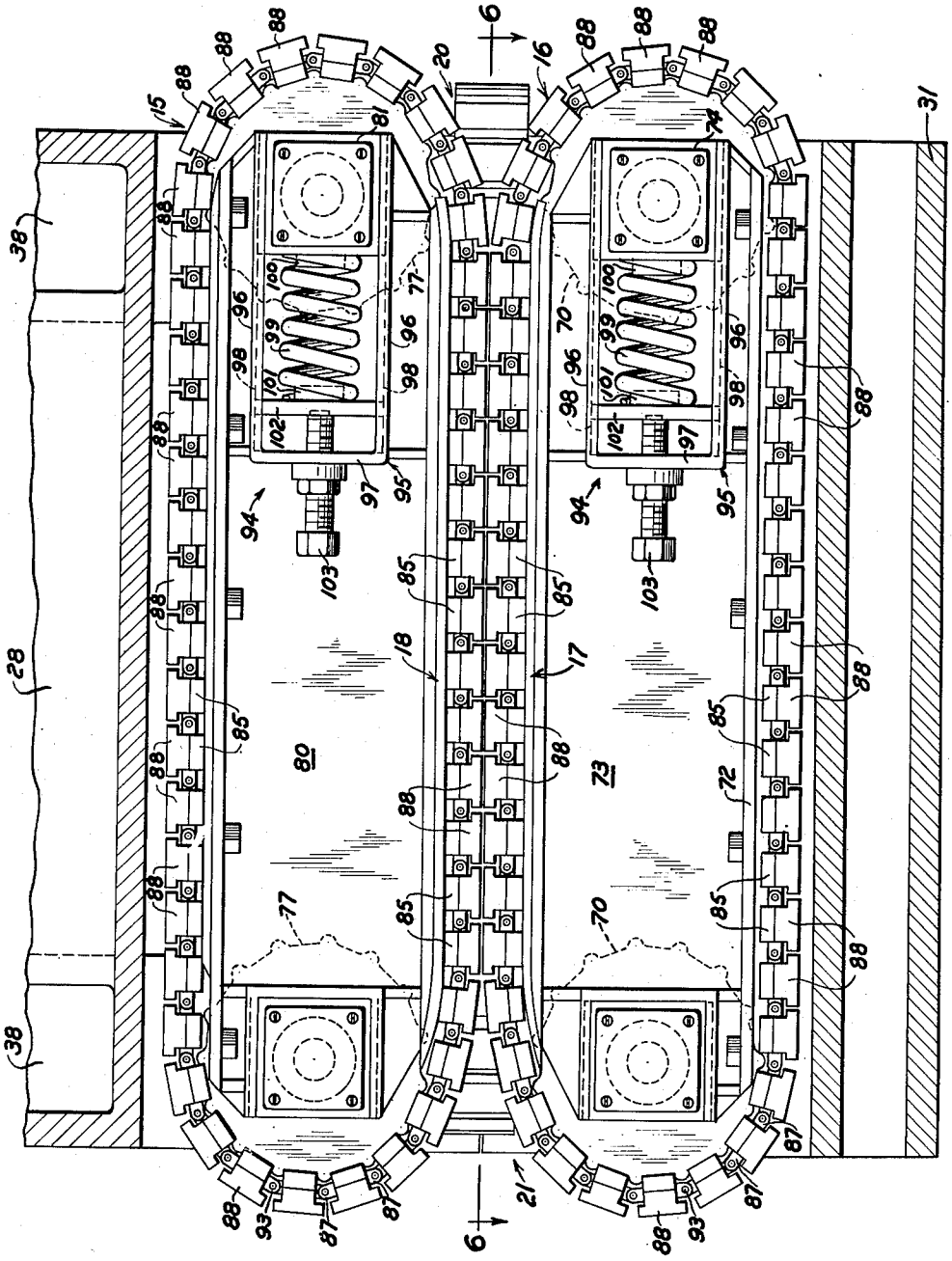

Fig. 5

INVENTOR.
RALPH N. THOMPSON.

BY James J. Shanley
ATTORNEY.

Sept. 25, 1951 R. N. THOMPSON 2,569,266

RIB CURVING MACHINE

Filed Oct. 25, 1946 5 Sheets-Sheet 5

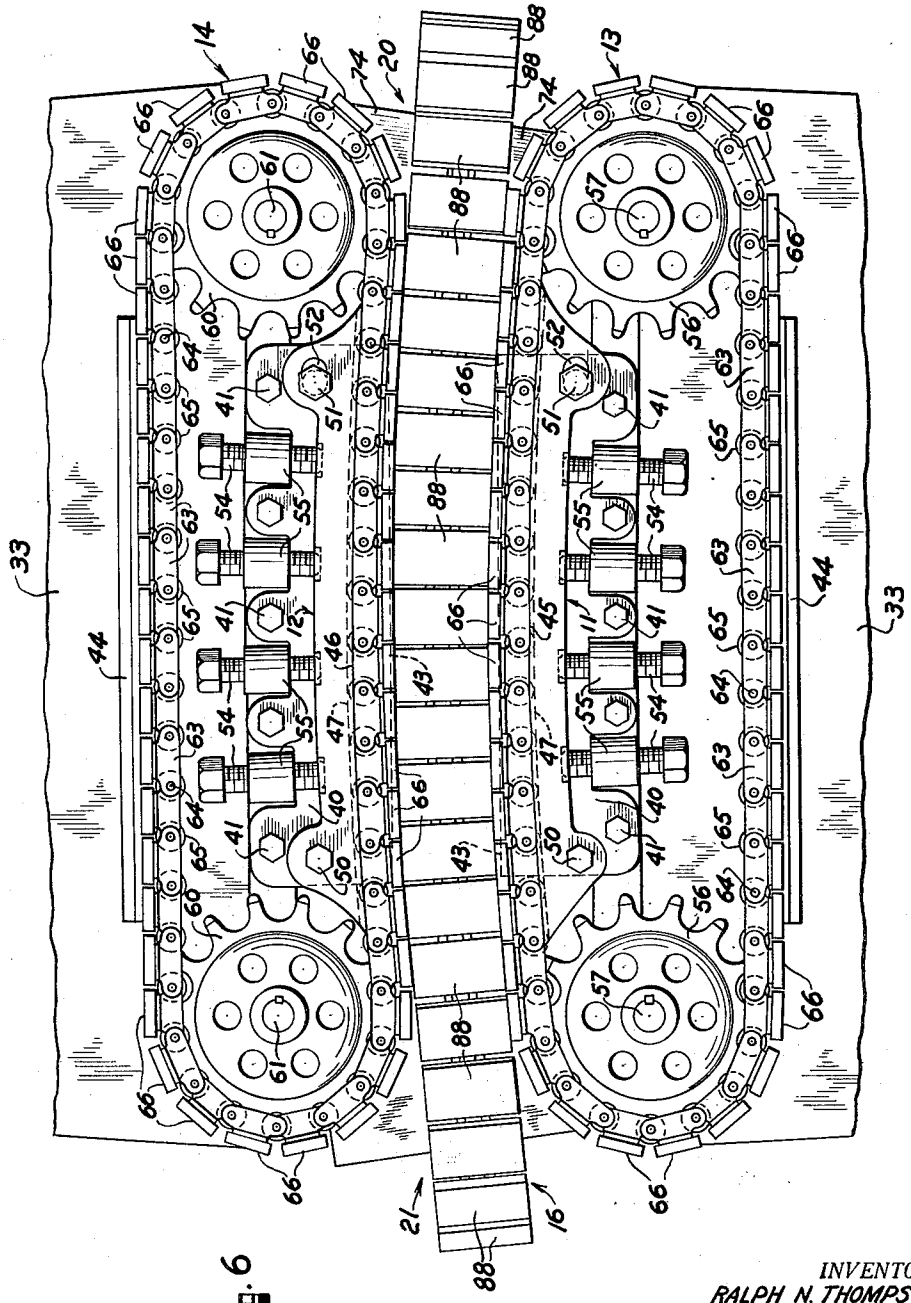

Fig. 6

INVENTOR.
RALPH N. THOMPSON.

BY James J. Alcauley
ATTORNEY.

Patented Sept. 25, 1951

2,569,266

UNITED STATES PATENT OFFICE

2,569,266

RIB CURVING MACHINE

Ralph N. Thompson, Lincoln Park, Mich., assignor to National Steel Corporation, a corporation of Delaware

Application October 25, 1946, Serial No. 705,591

16 Claims. (Cl. 153—32)

1

This invention relates generally to bending or forming machines and more particularly to machines for bending arch rib members.

In the manufacture of longitudinally curved or arcuate members, such as metallic arch ribs, it has been the general practice first to make a relatively straight member of desired section and then curve the member usually by passing it between a pair of feed rolls to which the member is directed by a guide roll. The curving action in these rolling systems is not due to the curvature of the roll surfaces, but instead is due to an offset relationship between the guide roll and the pair of feed rolls. In other words, the natural tendency of the member to bow, if held at spaced offset points along its length, is depended upon to achieve the curving of the member, the degree of curvature of which may vary considerably for different members. This bending operation by rolls may produce economically a satisfactorily curved member where the member comprises but a single piece of certain cross-section, the degree of curvature of which need not be accurate. However, it has not been satisfactory in the bending as an assembly of a composite member comprising two or more welded together elongated members. The principal objection to the bending of a composite, welded member by rolls is that the bending operation sets up non-uniform stresses in the member which many times breaks the welds. As a result, it has been the practice in the manufacture of composite, curved rib members to bend the parts thereof separately or prior to being assembled and welded together. One of the objections to this practice is that the separately bent parts frequently differ so widely in degree of curvature as to be unusable in the same assembly. In addition, this practice entails an undesirable number of operations and much handling of the several parts which is, of course, objectionable from the standpoint of cost of manufacturing.

Accordingly, it is an object of the present invention to provide a new and improved bending machine which will curve composite welded members without breaking the welds.

Another object of the invention is to provide a new and improved machine for successfully bending or curving either single piece members or composite members.

Another object of the invention is to provide a die type of bending machine having a combined pressing and rolling action into which members to be curved can be continuously fed

2

through the machine without opening and closing of dies.

Another object of the invention is to provide an arch rib forming machine having the advantages of die forming while also having the production advantages of rolling systems.

More specifically, it is an object of the invention to provide a bending machine in which the part to be curved is completely encompassed and gripped over its entire area during its travel through the machine.

Another object of the invention is to provide a bending machine which will decrease cost of manufacture of composite welded members.

Another object of the invention is to provide a machine of the above mentioned character in which the curving action can be readily changed or adjusted.

Another object of the invention is to provide a machine of the above mentioned character having a new and improved arrangement of the elements thereof for restricting a member to be curved to travel a predetermined path through the machine.

Another object of the invention resides in the adjustability of the restriction of travel of the member to be curved.

Other objects of the invention will be apparent from the following detailed description, taken in connection with the accompanying drawings, in which:

Figure 1 is a fragmentary, schematic view of a bending machine embodying features of the present invention;

Figure 2 is a plan view of the bending machine;

Figure 3 is a vertical cross-sectional view of the bending machine, taken along the line 3—3 of Figure 2;

Figure 4 is an enlarged, fragmentary sectional view of the bending machine, taken along the line 4—4 of Figure 2;

Figure 5 is a vertical sectional view of the bending machine, taken along the line 5—5 of Figure 3;

Figure 6 is a plan view of the bending machine with certain of the mechanism removed, taken substantially along the line 6—6 of Figure 5;

Figures 7, 8 and 9 are detail views of certain parts of the bending machine; and

Figures 10, 11, 12 and 13 are detail views of certain other parts of the bending machine.

In the drawings, illustrating a preferred embodiment of the invention, the bending machine

shown comprises, in general, a frame 10, a pair of bending forms or template members 11, 12, a pair of flexible bending members or endless chains 13, 14, a pair of flexible holding members or endless chains 15, 16, and a pair of chain restraining or guide plate members 17, 18. The template members 11, 12 are supported on the frame 10 in horizontal spaced relation and are respectively encircled by the bending chains 13, 14 which are horizontally spaced and arranged such that their work piece gripping surfaces, of the feed sides thereof, are in opposed relation between the template members. The holding chains 15, 16 are in vertical spaced relation such that their outer, work piece contacting surfaces are in opposed relation between the bending chains 13, 14. The chains 13, 14, 15, 16 are arranged to encompass and grip all surfaces of a work piece or member 19 to be curved and to travel therewith through an arcuate path guided by the template members 11, 12. The restraining plates 17, 18 are vertically spaced to co-operate with the vertically spaced chains 15, 16 to restrict vertical movement of the work piece or member 19. The machine has an inlet or feed end 20 and an outlet or discharge end 21 for the member 19 to be curved.

For purposes of illustration, the work piece or member 19 to be bent or curved by the machine is shown as being a nailable building element of composite construction and I-section, although it is to be understood that the machine is adapted to bend members of other sections and construction. The composite nailable member 19 comprises, in general, a channel member 22 to the back of which is welded a pair of spaced, parallel angle members 23 disposed respectively adjacent the flanges of the channel to obtain the I-section. The angle members 23 are spaced from the back of the channel web to provide nail receiving grooves therebetween and in the sides of these grooves complementary bends 25 cause nails to be bent and clinched against removal.

The frame 10 of the bending machine comprises, in general, a lower frame section or base 27 and an upper frame section or head 28. Preferably, the frame is supported on a suitable mounting 29 to which the frame base 27 may be secured by studs 30 or by any other suitable securing means. The frame base 27 is preferably a hollow casting having a bottom wall 31, opposite side walls 32, a top wall 33 and a pair of spaced apart internal walls or webs 34. Extending parallel with the casting side walls 32, the spaced webs 34 extend upwardly from the bottom wall to join with the top wall 33 which is interrupted between the webs 34 providing an elongated opening 35 therein. Below the base top wall 33, the spaced webs 34 form the sides of a chamber 36, the webs 34 being inwardly offset in the chamber 36 providing upwardly facing seating shoulders 37 therein for supporting mechanism hereinafter described. The present frame head 28 may comprise an elongated, hollow member supported on the base 27 by four depending legs 38 respectively seating on upstanding bosses 39 cast integral with the base top wall 33. The elongated frame head 28 is spaced immediately above and extends longitudinally of the opening 35 in the base top wall 33.

Preferably, the pair of template members 11, 12 respectively rest on the upper, flat supporting surfaces of a pair of mounting or bed plates 40 which in turn rest on the upper horizontal wall 33 of the base 27. Screws 41, or other suitable means may be used to hold the bed plates 40 securely to the base 27. As shown in Figure 3, the bed plates 40 are relatively laterally arranged in horizontal spaced relation, extending respectively along opposite side edges of the opening 35 in the base top wall 33. Also, the bed plates 40 are arranged, laterally overhanging the chamber 36 below the base top wall 33. Each of the bed plates 40 preferably has a downwardly offset portion or lower step 42 on each of which is supported a hardened, wear-resistant slideway member 43 on which adjacent portions of the chains 13, 14 slide. The outer or returning portions of the chains 13, 14 may slide on hardened, wear-resistant slideway members 44 secured to the upper surfaces of the base top wall 33 outwardly of the slideway members 43.

The pair of template members 11, 12 are preferably bow-shaped elongated members, the template member 11 having a convex template surface 45 and the template member 12 having a concave template surface 46. As shown, the template members 11, 12 are relatively arranged with their template surfaces 45, 46 in opposed, lateral spaced relation, these surfaces being parallel and curving in the general direction of travel of the member 19 from the inlet 20 to the outlet 21 of the machine. A guideway 47 is provided for the feed chains 13, 14 in each of the opposed template surfaces 45, 46 in the form of elongated recesses or slots extending longitudinally and co-extensive of the template surfaces. Each of the template members 11, 12 may be securely held adjacent one end thereof to its supporting bed plate 40 by a screw 50 (see Figure 6). The other ends of the template members 11, 12 are each held respectively to the bed plates 40 against swinging movement by a screw 51. The template members 11, 12 are preferably made of spring metal of a type and thickness which will tend to retain or yieldingly resist change of its curvature. To change or adjust the degree of curvature of the template members 11, 12 within predetermined limits, each of the template members is provided with a plurality of individual adjustment members or screws 54. These adjustment screws 54 are mounted on the frame base and arranged so that their ends are in spaced abutting relation with the outer convex concave surfaces respectively of the template members. The adjustment screws 54 are spaced longitudinally of each of the template members between the ends thereof. The template member securing screws 51 extend through apertures 52, elongated longitudinally of the template member, to permit free adjustment of the degree of curvature of the template members by the adjustment screws 54.

As shown in Figure 6, the driven chain 13 travels about a pair of horizontally spaced apart sprockets 56 respectively mounted on a pair of vertical shafts 57 which may be journaled in bearings mounted on the frame base 27. The pair of sprockets 56 are respectively located adjacent opposite ends of the template member 11, positioned so that the chain 13 encircles the template member traversing the convexly curved template surface 43 thereof. Similarly, the other chain 14 travels about a pair of horizontally spaced apart sprockets 60 mounted respectively on vertical shafts 61 which may be journaled in bearings mounted on the frame base 27. These sprockets 60 are located respectively adjacent opposite ends of the template member 12 and positioned so that the chain 14 encircles the template

member traversing longitudinally, the concave template surface 44 thereof.

The chain feed members 14, 15 may be alike, each comprising a plurality of pairs of laterally spaced links 63 connected together and to adjacent pairs of links by connecting pins 64 (see Figures 9, 10 and 11). On each of the pins 64 between opposite links is a roller 65 to engage the template surfaces to reduce friction, these rollers 65 engaging in the guideways 47 provided therefor in the template surfaces to restrain or limit vertical movement of the chains 13, 14. Each oppositely disposed pair of links 63 carries a gripping or friction pad 66 for engaging the outer flanged surfaces of the members 19 to be curved, the pads 66 being preferably as close together as permissible without interference therebetween. These friction pads 66 may be welded to outturned flanges 67 of the chain links or may be otherwise suitably secured thereto. To increase friction between the pads 66 and the work piece or rib members 19, the pads 66 are each provided on their outer surfaces with a wedge-shaped extended portion 68 which may extend the length of the pad, this wedge-shaped portion 68 being provided to wedgingly engage in the opening leading into the nailing groove of the members 19 (see Figure 4).

The lower chain 16 of the pair of holding chains travels about and between a pair of horizontally spaced sprockets 70 supported in the base chamber 36 between the spaced ribs 34. An elongated plate 72 resting flat on and secured to the shoulder seats 37 in the chamber 36 carries a pair of vertically extending spaced plates 73 on the outer opposite sides of which are bearing casings 74 in which the shafts of the sprockets 70 are journaled for free rotation. Seating flat on the upper edges of the vertical plates 73 is the lower chain restraining or supporting plate 17 which may be welded or be otherwise secured to the upper edges of the plates 73. This supporting plate 17 extends longitudinally of and beneath the upper portion of the chain to support the same against sagging. The supporting plate 17 preferably has an upper surface of hardened wear-resistant metal 75 on which the chain 16 slides. As is shown more clearly in Figure 3, the chain slide plate 17 is positioned between the opposite inner opposed edges of the slide plates 43 for the chains 13, 14.

The upper chain 15 of the vertically spaced pair of holding chains travels about and between a pair of horizontally spaced, vertical sprockets 77 carried by the upper frame or head 28. A horizontal supporting plate 78, secured flat against the underside of depending flanges 79 of the head 28 carries a pair of horizontally spaced, vertical plates 80 having bearing casings 81 on opposite sides thereof in which the horizontal shafts of the sprockets 77 are journaled for free rotation. The plates 80 depend from their common supporting plate 78 in vertical coplanar relation respectively with the lower plates 73. Secured flat against the lower edges of the upper plates 80 in overlying relation to the lower plate 17 is the upper chain restraining plate 18 having a lower surface of hardened wear-resistant metal 80 for sliding contact with the lower portion of the upper chain 15. This wear-resistant plate 18 overlies and extends longitudinally of the lower portion of the chain 15. Also, the plate 82 extends in width between the opposed faces of the chain gripping pads 66 but is preferably positioned slightly thereabove, as shown. The upper restraining plate 18 and the lower restraining plate 17 co-operate to limit movement of the adjacent portions of the chains away from each other.

The upper chain 15 and the lower chain 16 are alike, each comprising a plurality of link members 85, a plurality of interconnecting link members 86, 87 and gripping pads 88. The gripping pads 88 are carried respectively by the link members 85 to grip opposite sides of the web of member 19, the pads 88 being preferably arranged as close together as possible without interference therebetween. As shown, the chain links 85, 86, 87 are connected together to provide a universally flexible chain adapted when passing between the template members 11, 12 to follow a curved path corresponding thereto so that the gripping pads will be continuously in engagement with the member 19 during travel of the latter through the machine. The upper and lower holding chains 15, 16 are frictionally driven by the bending chains 13, 14 and through the chains 13, 14 are guided by the template members 11, 12. As is more clearly shown in Figure 4, the upper and lower chains 15, 16 are arranged so that the side edges thereof are in frictional driving engagement with the gripping pads 88.

Preferably, the link members 85 are rectangular shaped metallic blocks, spaced apart sufficiently to engage between the teeth of the sprockets. The gripping pads 88 may be secured to the outer faces of the link members 85 by screws or by other suitable means, the pads being of a width to engage snugly between the flanges of the member 19 to be curved. The outer, side edges of the pads 88 are preferably rounded, as at 89 to facilitate entrance of the pads between the flanges of member 19. Intermediate these rounded edges 89 of the pads of the lower chain 16, elongated depressions 90 are provided to receive complementarily the corrugated contour of one side of the web of member 19. Complementary to the other side of the web of member 19, the gripping faces of the pads 88 of the upper chain each have a pair of spaced parallel raised bead-like portions 90'. Between the raised bead-like portions 90' is a pair of oppositely facing abutment shoulders 92 for abutment by the inner edges of the angle members 23. The opposed faces of the link member 85 and their pads 88 are relieved or are longitudinally channeled to receive ends of the interconnecting link members 86, 87 which are pivotally connected by pins 91 to the links and pads midway between the end edges thereof. The outer ends of the link members 87 are bifurcated to receive the adjacent ends of the link members 86, the link members 86, 87 being pivotally connected together by pivot pins 93. Thus, it will be seen that in addition to being flexible so as to travel about their sprockets, the chains 15, 16 are also laterally flexible to flow the curved path of member 19 defined by the template members 11, 12. To aid the holding chains 15, 16 to follow the curved path of travel between the template members 11, 12, the sprockets 70, 77 of the chains 15, 16 are arranged so that their axes of rotation are normal to the curve, as seen in Figure 2.

Associated with each of the sprocket bearing cases 74 and 81 adjacent the inlet end 20 of the machine, a chain tightening or adjustment means 94 may be provided (see Figure 5). These chain adjustment devices may be alike, each having a support or mounting 95 respectively secured to the outer sides of the plates 73 and 80 preferably by welding them thereto. Each of the sup-

ports 95 comprises, in general, spaced upper and lower horizontal guideway members 96 joined together by an end wall 97. In the opposed surfaces of the upper and lower guideway members, guideways 98 slidably receive the sprocket bearing case which is yieldably urged outwardly by a helical coil spring 99. A retainer projection 100 on the sprocket casing retains one end of the spring, the other end of which is retained by a similar projection 101 on the end of a movably adjustable abutment member 102. The abutment member 102 is slidably guided in the guideways 98 and is movable to adjust compression of the spring 99 by an adjustment screw 103 which is screw-threaded into the end 97 of the support 95.

The upper frame or head 28 is made vertically adjustable relative to the frame base 27 whereby to adjust the position of the upper chain 15, carried by the head 28, with respect to the position of the lower chain 16. To this end, each of the base frame bosses 39 is hollow having therein and below its upper end a transverse or horizontal wall 105 to which is secured the lower end of a stud 106. The stud may be secured to the base against turning by a pin 106′ extending transversely through the stud into the base. The studs 106 extend upwardly respectively through lower portion of the head legs 36 and have threaded upper end portions to receive a tightening nut 107 and a lock nut 108. Each of the legs 36 of the frame head 28 is recessed in its lower end to freely receive the upper end of a sleeve 109 which surrounds the stud 106 and is press-fitted into the hollow bosses 39 of the base. In each of these sleeves 109, surrounding the studs is a helical coil spring 110 which is under compression acting to move the head upwardly along from the base. By tightening or loosening the nuts 107, it will be seen that the head may be vertically adjusted and that the upper chain 15 may be moved closer to or further away from the lower chain, as desired.

On each of the vertical shafts of the sprockets 56 and 60 at the discharge end of the machine is secured a gear 112 to mesh with a suitable speed reduction mechanism (not shown) which may be driven by any means, such as an electric motor (not shown). By suitable gearing in the speed reduction mechanism, or by using separate speed reduction mechanism for each of the driven chains 13, 14, the surface speeds of the gripping pads 66 thereof may be made alike.

In operation of the above described bending machine, relatively straight members 19 to be curved longitudinally are fed singly into the machine at the inlet 20. As one end of the member 19 is inserted in the inlet 20, it is gripped by the gripping pads 66 of the bending chains 12, 13 and by the gripping pads 88 of the upper and lower chains 15, 16 and is fed thereby longitudinally through the machine. The wedge-like gripping extensions 68 on the outer faces of the pads 66 engage in the openings into the nailing grooves of the members 19, thus increasing the driving friction between the pads and member 19. Also, the upper and lower chain pads 88 engage snugly between the flanges of member 19 engaging the inner sides thereof and also engaging complementarily, the opposite sides of the web of member 19. The driven bending chains 13, 14 and the holding chains 15, 16 frictionally driven thereby move the member 19 longitudinally through the arcuate path defined by the template members 11, 12, the gripping pads 66 and 88, gripping and holding member 19 along its entire length during such travel. The gripping pads 66, as they traverse the template surfaces, effect a die-like forming action by increment of bending on the member 19. The upper and lower gripping pads 88 of the universally flexible upper and lower chains 15, 16, follow the member 19 as it is being bent to hold the member 19 against vertical movement, the pads 88 of the chains 15, 16 following the curved path of travel so as to grip the member throughout its entire travel through the machine. Through the frictional drive connection with the bending chains 13, 14, the holding chains 15 and 16 passing between the template members 11, 12 are guided thereby to follow the curved path of travel. Friction between the die-feed chains 13, 14 and the templates 11, 12 is reduced by the rollers 65, carried by the chains. These rollers 65, traveling in the guide slots 47 in the template surfaces, also limit vertical movement of the chains. As the member 19 is continued to be fed through the machine it is held throughout its length to the desired curvature defined by the template members 11, 12 and discharged at the outlet 21 of the machine with the desired longitudinal curvature. Breaking of the welds of the member 19, as the member 19 is being bent is unlikely to happen because the member 19 is gradually bent by increments of bending action through the pads 66 and is being held or encompassed thereby and by the gripping pads 88 over its entire outer area during such bending action. It is understood, of course, that the gripping pads can be readily replaced by other gripping pads when it is desired to bend members of cross-sections other than the cross-section of member 19. Also, it will be understood that the template members can be readily replaced by template members of a different curvature, if desired. Since some springback is experienced in the member 19, varying with the stiffness and other physical characteristics of the metal thereof, templates of different curvature may be necessary to produce the same degree of ultimate curvature in member 19 when changing the material of member 19.

I claim:

1. In a bending machine for longitudinally curving an elongated member to be moved longitudinally through a laterally curved path of travel located in a plane the combination comprising, endless elongated flexible holding means positioned and arranged to travel through an endless arcurate path normal to said plane and to travel in longitudinal holding relation with the member to be curved, the elongated flexible means having surfaces engaging the member to be curved, restraining means limiting flexing of the elongated flexible means, and movable means carrying said flexible holding means in said position.

2. In a bending machine for longitudinally curving an elongated member to be moved longitudinally through a laterally curved path of travel located in a plane the combination comprising, endless elongated flexible holding means positioned and arranged to travel through an endless arcuate path normal to said plane and to travel in longitudinal holding relation with the member to be curved, the elongated flexible means having surfaces engaging the member to be curved, restraining means limiting flexing of the elongated flexible means in directions transverse to the direction of travel, friction increasing means on the elongated flexible means to

engage the member to be curved, and movable means carrying said flexible holding means in said position.

3. In a bending machine for longitudinally curving an elongated member to be moved longitudinally through an elongated, laterally curved path of travel located in a first plane the combination comprising, endless elongated univesrally flexible holding means movable longitudinally with the member to be curved along the curved path of travel and through an endless arcuate path located in a second plane normal to said first plane, the universally flexible holding means having engaging surfaces to engage the member to be curved, restraining plates limiting flexing movement of the universally flexible holding means in directions normal to the engaging surfaces thereof, and rotatable sprocket means carrying said flexible holding means to dispose the same along said path of travel.

4. In a bending machine for longitudinally curving an elongated member moved longitudinally through an elongated path of travel curved about an axis the combination comprising, chain means movable longitudinally with the member to be curved and movable through an endless arcuate path in a plane parallel to said axis, gripping pads carried by the chain means in spaced relation along the outer periphery thereof to engage the member to be curved, the chain means including link members arranged to pivot about axes normal to the periphery of the chain means so as to follow the curved path traveled by the member to be curved, and means limiting flexing of the chains in directions transverse to the direction of travel.

5. In a bending machine for longitudinally bending an elongated member the combination comprising, template means defining a curved path of travel for the member to be curved, endless elongated flexible bending means movable longitudinally with the member to be curved through the curved path of travel in guiding relationship with the template means and movable through an endless arcuate path located in a plane, and endless elongated flexible holding means positioned to move in holding relation longitudinally with the member to be curved and positioned to move through an endless arcuate path located in a plane normal to said first plane, and movable means carrying said flexible holding means in said position.

6. In a bending machine for longitudinally bending an elongated member the combination comprising, template means defining a curved path of travel for the member to be curved, endless elongated flexible bending means movable longitudinally through an endless arcuate path located in a plane and movable longitudinally with the member to be curved through the curved path of travel in guiding relationship with the template means, and endless elongated flexible holding means movable through an endless arcuate path located in a plane normal to said first plane and positioned to move in holding relation longitudinally with the member to be curved in guiding relationship with the template means, and thereby being constrained to follow said path of travel, and sprocket means carrying said flexible holding means in said position.

7. In a bending machine for longitudinally bending an elongated member the combination comprising, template means defining a curved path of travel for the member to be curved, elongated flexible bending means movable longitudinally with the member to be curved through the curved path of travel in guiding relationship with the template means, and elongated flexible holding means movable in holding relation longitudinally with the member to be curved said elongated holding means being engaged and driven by the elongated flexible bending means, and thereby being constrained to follow said path of travel, and rotatable sprocket means carrying said flexible holding means adjacent said bending means.

8. In a bending machine for longitudinally curving an elongated member, template means including a pair of spaced opposed curved surfaces defining a path of travel for the member to be curved, a pair of elongated flexible bending members movable longitudinally through the path of travel in guiding relationship respectively with the pair of opposed curved surfaces of the template means, the pair of elongated flexible bending members being spaced apart to engage therebetween the member to be curved, and a pair of elongated flexible holding members to engage and move with the member to be curved through the path of travel, the pair of elongated flexible holding members extending laterally between and in frictional driving engagement with the pair of elongated flexible bending members, and being constrained by such bending members to follow said path of travel, and spaced rotatable sprocket means carrying said flexible holding means adjacent said bending members.

9. In a bending machine for longitudinally curving an elongated member the combination comprising, a pair of template members having opposed curved surfaces in opposed spaced relation, the pair of template members being arranged for longitudinal travel therebetween of the elongated member to be curved, an endless chain bending member encircling one of the template members and being flexible to follow the template surface thereof, a second endless chain bending member encircling the other of the template members and being flexible to follow the template surface thereof, the first and second endless chains between the template members being spaced apart to engage the member to be curved therebetween and travel therewith between and in guiding relationship with the template surfaces, a pair of endless chain holding members having opposed outer surfaces spaced apart between the pair of endless chain bending members, the pair of endless chain holding members being arranged to engage the member therebetween and move therewith between the pair of template members, and a pair of restraining plates disposed respectively outwardly of the pair of endless chain holding members passing between the pair of template members.

10. In a machine having a flexible elongated feed member to engage laterally with and move an elongated member to be curved longitudinally along a path of travel the combination comprising, supporting means, a curved spring template member supported by the supporting means to guide the flexible feed member through a corresponding curved path of travel, the spring template member having a free end, means holding the other end of the spring template member against movement to the supporting means, abutment means spaced longitudinally of the spring template member from the said other end thereof in engagement with the spring template member, and adjustment means acting on the spring tem-

plate member intermediate the said other end thereof and the said abutment means determining the curvature of the spring template member.

11. In a machine for longitudinally bending an elongated member, the combination comprising bending mechanism including flexible means constrained to follow a curved path of travel and engageable with said elongated member to move in a first plane with said elongated member through said path, and holding mechanism including flexible means constructed and arranged to move in a second plane normal to said first plane with said elongated member in holding engagement therewith for maintaining the member in said path of travel.

12. In a machine for longitudinally bending an elongated member, the combination comprising driven movable bending means constrained to follow a curved path of travel and engageable with said elongated member to move in a first plane with said elongated member through said path, driving means for said bending means, holding means operably associated with said driven bending means and movable in a second plane normal to said first plane and movable with said elongated member in holding engagement therewith for mantaining the member in said path of travel, and carrying means for said holding means, said carrying means disposing said holding means in position for said holding engagement.

13. In a machine for longitudinally bending an elongated member, the combination comprising movable bending means constrained to follow an arcuate path of travel in a first plane and engageable with said member to move therewith through said path, the transverse boundaries of said path of travel lying in parallel planes, holding means constructed and arranged to move in a second plane normal to said first plane with said member in a holding engagement therewith, said holding means engaging said members substantially in said parallel planes for maintaining the member in said path of travel, and carrying means for said holding means.

14. In a machine for longitudinally bending an elongated member, the combination comprising stationary curvilinear means defining a curved path of travel for the member to be bent, driven bending means maintained in guiding relation with said curvilinear means and being engageable with said member to move therewith through said path of travel, driving means for said bending means, holding means operably associated with said bending means, said holding means being constrained by said bending means to follow said path of travel and being movable in holding engagement with said member for maintaining it in said path of travel, and carrying means for said holding means.

15. In a machine for longitudinally bending an elongated member, the combination comprising stationary curvilinear means defining a curved path of travel for the member to be bent, driven bending means maintained in guiding relation with said curvilinear means and being engageable with said member to move therewith through said path of travel, the transverse boundaries of said path of travel lying in parallel planes, holding means operably associated with said bending means, said holding means being constrained by said bending means to follow said path of travel and engaging said member substantially in said planes for maintaining the member in said path of travel, and carrying means for said holding means, said carrying means disposing said holding means in position for said holding engagement.

16. In a bending machine for longitudinally curving an elongated member moved through an elongated, laterally curved path of travel in a first plane, said path being curved about an axis normal to said first plane, the combination comprising, endless elongated holding means including a plurality of universally pivoted together engaging members having surfaces to engage the member to be curved, the engaging members being movable with the member to be curved in holding relationship therewith along the curved path of travel, means limiting relative pivotal movement between the engaging members in directions transverse to the path of travel, and rotatable sprocket means carrying the endless holding means to dispose the same along said path of travel and for movement in a plane normal to said first plane.

RALPH N. THOMPSON.

REFERENCES CITED

The following references are of record in the file of this patent:

UNITED STATES PATENTS

Number	Name	Date
1,810,819	Clark	June 16, 1931
1,980,308	Adams, Jr.	Nov. 13, 1934
2,033,424	Frank	Mar. 10, 1936
2,336,535	Elliott et al.	Dec. 14, 1943
2,463,383	Hokanson	Mar. 1, 1949

FOREIGN PATENTS

Number	Country	Date
344,057	France	Oct. 24, 1904