United States Patent [19]

Wong

[11] **3,710,581**

[45] **Jan. 16, 1973**

[54] TUBULAR CONSTRUCTION

[75] Inventor: **Lip F. Wong, Richmond, Va. 23261**

[73] Assignee: **Reynolds Metals Company, Richmond, Va.**

[22] Filed: **July 6, 1971**

[21] Appl. No.: **159,656**

[52] **U.S. Cl.** ..... **61/45 R, 61/84**

[51] **Int. Cl.** **E01g 5/06**

[58] **Field of Search** ..... 61/45 R, 42, 43, 84, 85, 63

[56] **References Cited**

UNITED STATES PATENTS

1,397,708	11/1921	Stowell	61/45 R
2,002,987	5/1935	Schulz	61/45 R
558,094	4/1896	Moxham	61/45 R
2,096,850	10/1937	Forsberg	61/45 R
67,035	7/1867	Foley	61/45 R
862,288	8/1907	Smith	61/43
1,254,136	1/1918	Hastings	61/45 R X
1,456,806	5/1923	Lancette	61/45 R
1,624,369	4/1927	Serra	61/45 R X
1,975,043	9/1934	Hoffmann	61/45 R X

Primary Examiner—Dennis L. Taylor

Attorney—John F. C. Glenn et al.

[57] **ABSTRACT**

An improved tunnel construction is provided and comprises a plurality of members each having a pair of spaced sides and a pair of spaced parallel ends. Hook means is provided on each of the sides and the members are arranged in a plurality of longitudinal rows with the hook means of each member being interlocked with hook means of associated members and with each pair of members in one row being arranged with associated ends in adjoining relation while being overlapped by a single member of an adjoining row to define the major portion of the tunnel construction having a pair of rows arranged immediately adjacent each other. The pair of rows are fastened together in an enclosed manner to define a substantially cylindrical tunnel construction.

5 Claims, 4 Drawing Figures

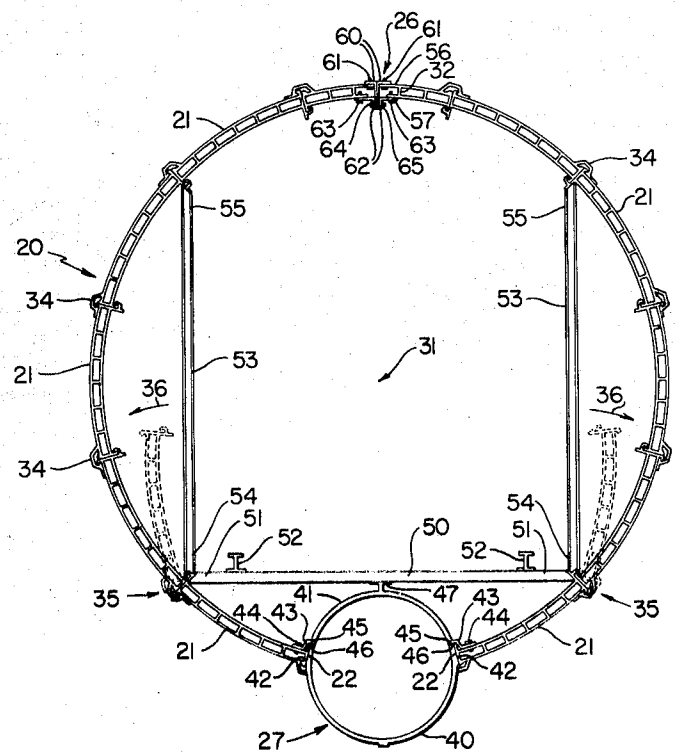

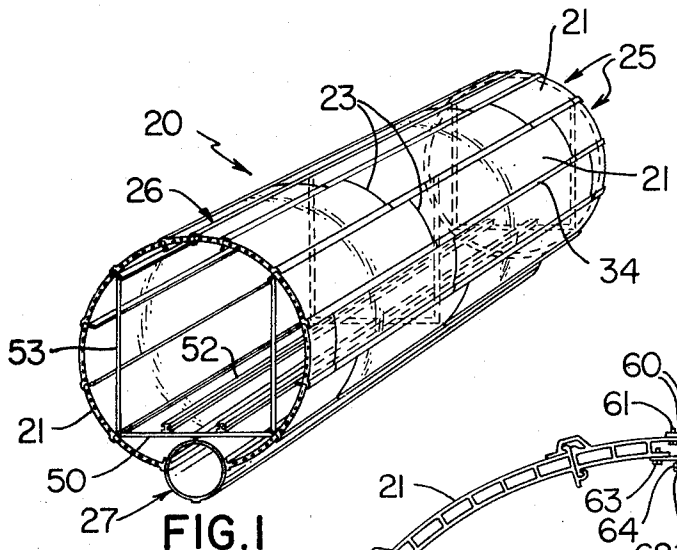

FIG. 1

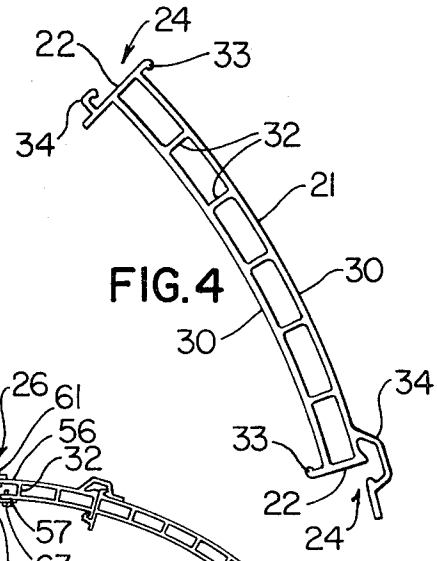

FIG. 4

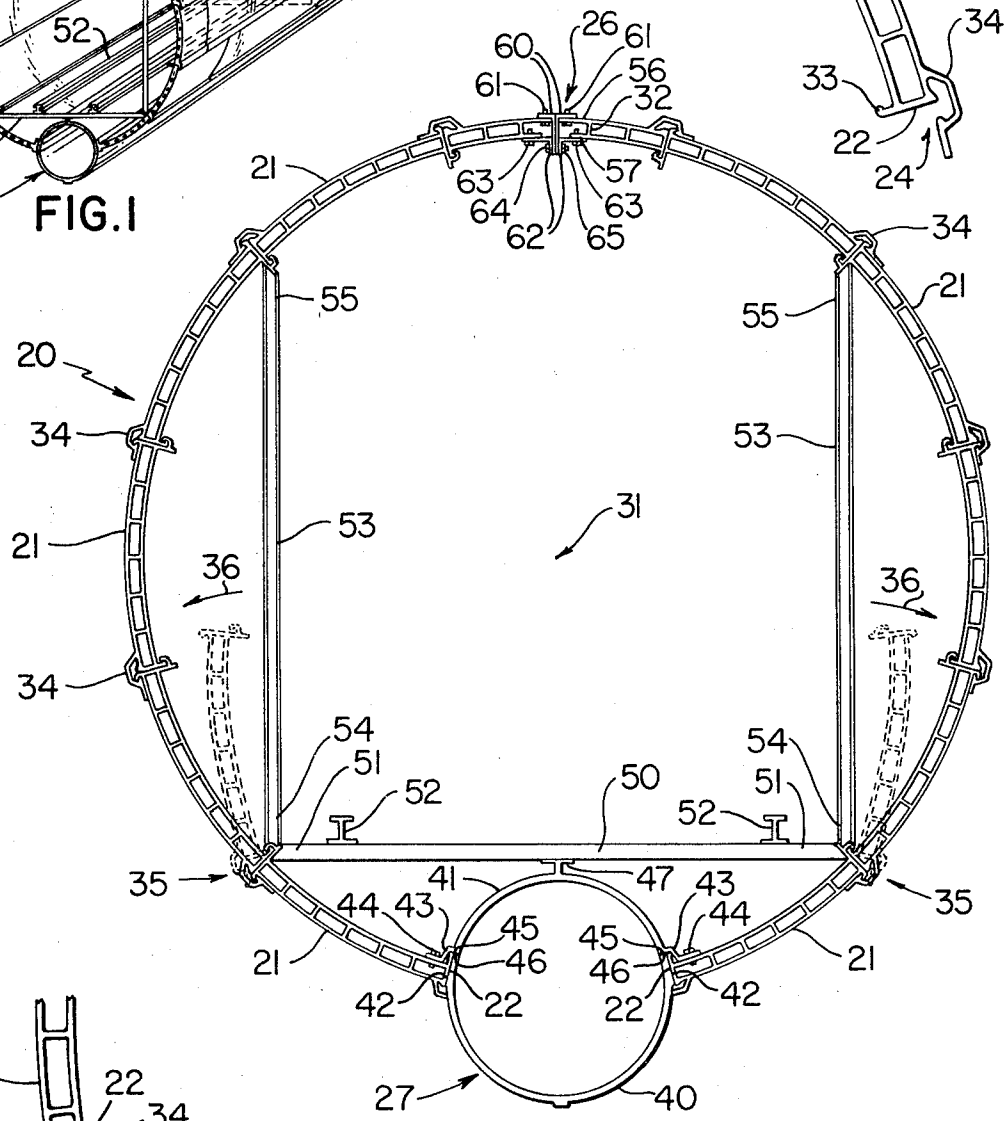

FIG. 2

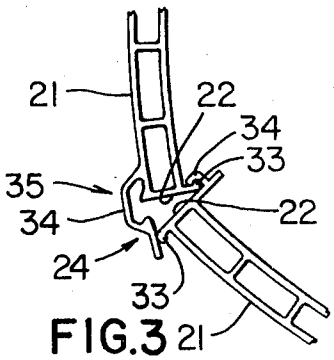

FIG. 3

INVENTOR.
LIP F. WONG

BY Glenn, Palmer, Lyne, Gibbs & Thompson

HIS ATTORNEYS

TUBULAR CONSTRUCTION

BACKGROUND OF THE INVENTION

In the construction of roadways for automobiles and locomotives, large tunnels for pipelines and the mining of various ores, coal, etc., it is often necessary to excavate underground for extended distances. To assure that any excavated opening is not filled by material adjoining such opening, it may be desirable to provide a tubular construction lining such opening which is easily assembled and disassembled. In addition, it is desirable that means be provided with such a tubular construction to assure men working underground will have air to breathe as well as an escape route in the event of substantial damage to or collapse of any part of the tubular construction.

SUMMARY

This invention provides an improved tubular or tunnel construction and an improved high strength member for use in making such a tunnel construction. The tunnel construction is easily assembled and disassembled and is useful for various purposes and particularly for mining operations. The tunnel construction comprises a plurality of members each having a pair of spaced sides and a pair of spaced parallel ends. Hook means is provided on each of the sides and the members are arranged in a plurality of longitudinal rows with the hook means of each member being interlocked with hook means of associated members and with a pair of members in one row being arranged with associated ends in adjoining relation while being overlapped by a single member of an adjoining row to define the major portion of the tunnel construction having a pair of rows arranged immediately adjacent each other and such pair of rows are suitably fastened together to define a substantially cylindrical tunnel construction.

Other details, uses, and advantages of this invention will become apparent as the following description of the exemplary embodiment thereof presented in the accompanying drawing proceeds.

BRIEF DESCRIPTION OF THE DRAWING

The accompanying drawing shows an exemplary embodiment of this invention, in which,

FIG. **1** is a perspective view showing one exemplary embodiment of the tunnel construction of this invention;

FIG. **2** is an enlarged end view of the tunnel construction of FIG. **1** and illustrating by dotted lines the manner in which a pair of members comprising the construction and arranged on opposite sides thereof are initially positioned prior to being moved outwardly and interlocked by associated hook means whereupon members arranged above the illustrated pair are similarly interlocked;

FIG. **3** is an enlarged fragmentary end view illustrating a pair of associated members partially interlocked using their associated hook means; and

FIG. **4** is an enlarged end view of a typical member comprising the major portion of the tunnel construction of FIG. **1**.

DESCRIPTION OF ILLUSTRATED EMBODIMENT

Reference is now made to FIGS. **1** and **2** of the drawing, which illustrate one exemplary embodiment of a tunnel construction of this invention which is designated generally by the reference numeral **20**. The tunnel construction or tunnel **20** is particularly adapted to be used during underground tunneling or excavation for any purpose such as providing an underground road bed for automobiles and locomotives, installing large underground conduits, and the mining of metals, coal, and other materials.

The tunnel construction **20** comprises a plurality of members **21** each having a pair of spaced sides **22** and a pair of spaced parallel ends **23**, also see FIG. **4**. Each member **21** also has hook means designated generally by the reference numeral **24** provided on each of the sides **22**.

The members **21** are arranged in a plurality of longitudinal rows **25** with the hook means **24** of each member being interlocked with hook means of associated members and with each pair of members in one row being arranged with associated ends in adjoining or abutting relation while having their end portions overlapped by a single member of an adjoining row to define the major portion of the tunnel construction **20** having a pair of rows arranged immediately adjacent each other. In this example, the immediately adjacent pair of rows is positioned adjacent the top of the construction, as viewed in FIG. **2**, and suitable fastening means **26** is provided for fastening such top pair of rows together to define a substantially cylindrical tunnel construction. The fastening means **26** will be described in detail subsequently.

The tunnel construction **20** has a tubular assembly **27** provided as a part thereof and the assembly **27** may be used to supply air to men working underground and such assembly may also be used as an escape tube in the event of an emergency. The tubular assembly **27** will be described in detail subsequently.

Each member **21** has an arcuate configuration corresponding in outline to the circumferential outline of the tunnel **20**. In particular, each member has a pair of spaced arcuate walls or surfaces each designated by the reference numeral **30** defining the major part of its exposed surface area and each surface **30** is in the form of a circular arc having a center indicated at **31** which coincides with the longitudinal axis of the tunnel construction **20** which is also designated by the reference numeral **31**, see FIGS. **2** and **4**.

The arcuate walls **30** have their associated side edges connected by sides **22** and their associated end edges connected by ends **23**. Each member **21** also has one or more webs **32** interconnecting the arcuate walls **30** at locations between the sides **22**. In this example, a plurality of webs **32** are provided and arranged in substantially equally spaced apart relation between and roughly parallel to roughly parallel sides **22** whereby each member **21** has a substantially honeycomb construction.

The tunnel construction **20** has its entire tubular wall made free of openings or spaces which might allow dirt or other materials to flow therein. In addition, with the members **21** having a honeycomb construction, such tunnel construction has great strength and resistance against collapse.

The sides 22 of each member 21 are substantially planar and each planar side 22 coincides with an associated imaginary plane which extends through the longitudinal axis 31 of the tunnel construction 20. Further, each planar side 22 has a projection 33 extending from one edge portion thereof and a hook 34 extending from an oppositely arranged edge portion and each projection 33 and hook 34 extending from a particular side 22 defines a hook means 24. Each hook 34 and projection 33 defining a hook means 24 is a continuous uninterrupted component extending the full length of each member between its opposite ends 23.

Each projection 33 and hook 34 of a member 21 of tunnel construction 20 is interlocked with a hook 34 and projection 33 respectively of an adjoining member 21, see FIG. 3, for example. Thus, the major portion of the cross-sectional outline of the tunnel 20 is defined by interlocked members 21.

It is a simple matter to interlock associated members 21 together and such interlocking is achieved by hooking a projection 33 within an associated hook 34 as shown in FIG. 3 and by dotted lines at 35 in FIG. 2. The associated member is then rotated outwardly from the central longitudinal axis 31 of the tunnel construction as shown by arrows 36 in FIG. 2 to provide the interlocking action.

As previously indicated, the tunnel construction 20 has a tubular assembly 27 provided as a part thereof and the tubular assembly 27 may be fixed to the tunnel construction 20 at any suitable peripheral location and may be physically provided either within or without such construction. In this example, the assembly 27 comprises an integral part of the peripheral or tubular wall of the tunnel construction.

The assembly 27 may be made of any suitable number of components; however, such assembly is preferably made using substantially semicylindrical sections 40 and 41. The section 40 defines the lower portion of the assembly 27 and has a pair of inclined surfaces 42 which serve as holding surfaces which engage sides 22 of a pair of members 21 defining the lower portion of the tunnel 20. The section 41 defines the upper section of assembly 27 and has flanges 43 extending outwardly from its opposite sides and each flange has an opening through which a threaded bolt 44 may be inserted and threaded in an associated threaded opening provided in a member 21. It will also be appreciated that each flange may be detachably fastened in position using any other suitable technique enabling quick assembly and disassembly.

Once member 41 is fastened in position, the lower members 21 of the tunnel construction are held from moving outwardly allowing inclined surfaces 42 to engage sides 22 whereby the lower member 40 is held firmly against outward, downward, in this illustration, movement. It will also be noted that member 40 has surfaces 45 which engage cooperating surfaces 46 of flanges 43 to prevent rotary movements of of member 40.

The member 41 also has a roughly T-shaped upward extension 47 provided as an integral part thereof. The extension 47 is particularly adapted to provide a central support for a cross tie 50 which may extend across the lower portion of the tunnel construction 20. The tie 50 provides an internal brace for the tunnel construction and has opposite ends 51 suitably attached to members 21. Cross ties 50 are provided at spaced intervals along the tunnel construction 20 and may support a flat road bed or rails such as rails 52 for an underground locomotive.

To provide greater vertical strength for the tunnel construction 20, it may be desirable to provide a plurality of vertical posts or columns 53 at spaced intervals along the construction 20. Each post 53 preferably has a lower portion 54 detachably fastened to and supported by an associated end portion 51 of a cross tie 50 and an upper portion 55 detachably fastened to an associated member 21 arranged adjacent the top portion of the tunnel construction 20. The posts 53 may be detachably fastened using any suitable technique.

As previously indicated, the tunnel construction 20 has fastening means 26 for fastening an immediately adjacent pair of rows 25 positioned adjacent the top of such construction. In this example of the invention, the fastening means 26 comprises a pair of members 21 each having hook means 24 along one side suitably fastened to the hook means of associated members and each having a portion thereof cut away to provide a pair of wall portions 56 and 57 (originally comprising parts of walls 30) extending outwardly beyond an immediately adjacent web 32.

A pair of L-shaped fastening flanges or beams 60 may be fastened longitudinally along the tunnel construction 20 using fasteners such as threaded bolts 61 which extend through openings in the wall portions 56 and are threadedly received within cooperating threaded openings in the leg portions of flanges 60.

In a manner, substantially L-shaped flanges 62 are fastened to the wall portions 37 using threaded bolts 63 which extend through openings in the L-shaped flanges 62 and through cooperating threaded openings in the wall portions 57. The L-shaped flanges 62 are fastened to the flanges 60 using a plurality of bolts 64 which extend through aligned openings in associated legs of the flanges 60 and 62 and bolts 64 are provided with cooperating nuts 65 to thereby hold together the upper members 21 which have been cut substantially in half and hold the entire tunnel construction together as a single tubular unit having a substantially right circular cylindrical configuration.

Thus, it is seen that the fastening means for fastening the upper portion of a pair of rows 25 of members 21 arranged adjacent the top of the tunnel construction 20 are defined by certain members 21 which have been partially cut away, flanges 60 and 62, bolts 61 and 63, and bolts 64 together with cooperating nuts 65. However, it will be appreciated that any suitable means known in the art may be provided for fastening a pair of rows 25 of members 21 which are arranged immediately adjacent each other and are required to be fastened to define the tubular outline and configuration of the tunnel construction 20.

The members 21, 40, 41, 50, 53, 60, and 62 may be made of any suitable material and are preferably made of high strength, lightweight materials such as aluminum alloys. It will also be appreciated that the members 21 may be made using any suitable manufacturing technique and upon making such members of aluminum alloys such members are preferably made by extrusion process.

Each member **21** may be of any suitable length and it has been found that lengths of **10** feet can be economically produced and readily assembled. Similarly, each section **40** and **41** of the assembly **27** may also be made in sections of approximately 10 feet in length. The arcuate length, i.e., arcuate dimension between sides **22**, of each member **21** will vary depending upon the application of such member and may range between 2 and 3 feet. Further, tunnel constructions similar to tunnel construction **20** may have outside diameters generally of the order of 6 to 8 feet or more with the escape tube or assembly **27** having an inside diameter generally of the order of 2 feet.

While present exemplary embodiments of this invention, and methods of practicing the same, have been illustrated and described, it will be recognized that this invention may be otherwise variously embodied and practiced within the scope of the following claims.

What is claimed is:

1. A tunnel construction comprising a plurality of members each having a pair of spaced sides and a pair of spaced ends, hook means provided on at least one side of each of said members, said members being arranged in a plurality of longitudinal rows with the hook means of each member being interlocked with hook means of associated members and with a pair of members in one row being arranged with associated ends in adjoining relation while being overlapped by a single member of an adjoining row to define the major portion of said tunnel construction and a tubular assembly fastened between a pair of rows of immediately adjacent members and defining a wall portion of said construction, said tubular assembly being usable as an escape tube.

2. A tunnel construction comprising, a plurality of members each having a pair of spaced sides and a pair of spaced parallel ends, hook means provided on each of said sides, said members being arranged in a plurality of longitudinal rows with the hook means of each member being interlocked with hook means of associated members and with a pair of members in one row being arranged with associated ends in adjoining relation while being overlapped by a single member of an adjoining row to define the major portion of said tunnel construction having a pair of rows arranged immediately adjacent each other, and means fastening said pair of rows together to complete said tunnel construction, each side of each of said members having a substantially planar configuration and each planar side being held against an associated planar side of each associated member upon interlocking associated hook means, each planar side having a projection extending from one edge portion and a hook extending from an oppositely arranged edge portion with each projection and hook defining a hook means, each projection and hook being interlocked with a hook and projection respectively of an associated adjoining member, each hook and projection being a continuous uninterrupted component extending the full length of each member between its opposite ends.

3. A tunnel construction comprising, a plurality of members each having a pair of spaced sides and a pair of spaced parallel ends, hook means provided on each of said sides, said members being arranged in a plurality of longitudinal rows with the hook means of each member being interlocked with hook means of associated members and with a pair of members in one row being arranged with associated ends in adjoining relation while being overlapped by a single member of an adjoining row to define the major portion of said tunnel construction having a pair of rows arranged immediately adjacent each other, and means fastening said pair of rows together to complete said tunnel construction, each side of each of said members having a substantially planar configuration and each planar side being held against an associated planar side of each associated member upon interlocking associated hook means, each planar side of each member coinciding with an imaginary plane through a central longitudinal axis of said tunnel construction, each planar side having a projection extending from one edge portion and a hook extending from an oppositely arranged edge portion with each projection and hook defining an associated hook means, each projection and hook being interlocked with a hook and projection respectively of an associated adjoining member.

4. A tunnel construction comprising, a plurality of members each having a pair of spaced sides and a pair of spaced parallel ends, hook means provided on each of said sides, said members being arranged in a plurality of longitudinal rows with the hook means of each member being interlocked with hook means of associated members and with a pair of members in one row being arranged with associated ends in adjoining relation while being overlapped by a single member of an adjoining row to define the major portion of said tunnel construction having a pair of rows arranged immediately adjacent each other, means fastening said pair of rows together, and a tubular assembly fastened between associated rows of immediately adjacent members and defining a wall portion of said tunnel construction, said tubular assembly being defined by cooperating substantially semicylindrical sections comprised of upper and lower sections arranged at the bottom of said tunnel construction, each of said upper sections having an integral substantially T-shaped projection which is particularly adapted to provide a central support for cross ties installed along the bottom of said tunnel construction, said tubular assembly being usable to convey air underground and as an escape tube.

5. A tubular construction comprising, a plurality of members each having a pair of spaced sides with each side being provided with a pair of spaced edge portions and each member having a pair of spaced opposite ends, each of said sides having a projection extending from one said edge portions and a hook extending from the other of said member, said members being arranged in a plurality of longitudinal rows with a pair of members in one row arranged with their associated ends in adjoining relation while being connected by a single member of an adjoining row, each projection and hook being interlocked with a hook and projection respectively of an associated adjoining member, and each hook and projection being a continuous uninterrupted component extending the full length of its member between its opposite ends.

* * * * *