(12) INTERNATIONAL APPLICATION PUBLISHED UNDER THE PATENT COOPERATION TREATY (PCT)

(19) World Intellectual Property Organization
International Bureau

(43) International Publication Date
22 November 2007 (22.11.2007)

PCT

(10) International Publication Number
WO 2007/133403 A3

(51) International Patent Classification:
B01D 39/20 (2006.01) *B01D 39/16* (2006.01)

(21) International Application Number:
PCT/US2007/009963

(22) International Filing Date: 25 April 2007 (25.04.2007)

(25) Filing Language: English

(26) Publication Language: English

(30) Priority Data:
11/381,010 1 May 2006 (01.05.2006) US

(71) Applicant *(for all designated States except US)*: **DONALDSON COMPANY, INC.** [US/US]; 1400 West 94th Street, P.o. Box 1299, Minneapolis, MN 55440-1299 (US).

(72) Inventors; and

(75) Inventors/Applicants *(for US only)*: **WEBB, David, M.** [US/US]; 20395 320th Street, New Prague, MN 56071 (US). **CARLSON, David, E.** [US/US]; 407 Oakland Lane, Burnsville, MN 55337 (US).

(74) Agent: **BRUESS, Steven, C.**; Merchant & Gould P.c., P.o. Box 2903, Minneapolis, MN 55402-0903 (US).

(81) Designated States *(unless otherwise indicated, for every kind of national protection available)*: AE, AG, AL, AM, AT, AU, AZ, BA, BB, BG, BH, BR, BW, BY, BZ, CA, CH, CN, CO, CR, CU, CZ, DE, DK, DM, DZ, EC, EE, EG, ES, FI, GB, GD, GE, GH, GM, GT, HN, HR, HU, ID, IL, IN, IS, JP, KE, KG, KM, KN, KP, KR, KZ, LA, LC, LK, LR, LS, LT, LU, LY, MA, MD, MG, MK, MN, MW, MX, MY, MZ, NA, NG, NI, NO, NZ, OM, PG, PH, PL, PT, RO, RS, RU, SC, SD, SE, SG, SK, SL, SM, SV, SY, TJ, TM, TN, TR, TT, TZ, UA, UG, US, UZ, VC, VN, ZA, ZM, ZW.

(84) Designated States *(unless otherwise indicated, for every kind of regional protection available)*: ARIPO (BW, GH, GM, KE, LS, MW, MZ, NA, SD, SL, SZ, TZ, UG, ZM, ZW), Eurasian (AM, AZ, BY, KG, KZ, MD, RU, TJ, TM), European (AT, BE, BG, CH, CY, CZ, DE, DK, EE, ES, FI, FR, GB, GR, HU, IE, IS, IT, LT, LU, LV, MC, MT, NL, PL, PT, RO, SE, SI, SK, TR), OAPI (BF, BJ, CF, CG, CI, CM, GA, GN, GQ, GW, ML, MR, NE, SN, TD, TG).

Published:
— *with international search report*
— *before the expiration of the time limit for amending the claims and to be republished in the event of receipt of amendments*

(88) Date of publication of the international search report:
24 January 2008

For two-letter codes and other abbreviations, refer to the "Guidance Notes on Codes and Abbreviations" appearing at the beginning of each regular issue of the PCT Gazette.

(54) Title: FILTER MEDIUM AND BREATHER FILTER STRUCTURE

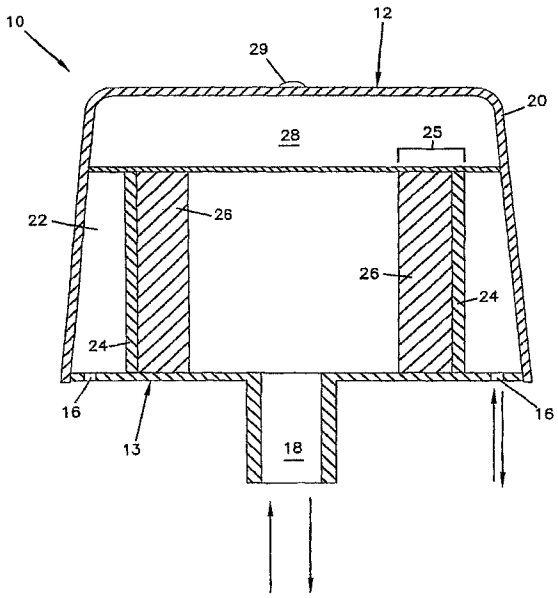

(57) Abstract: Thermoplastic bicomponent binder fiber can be combined with other media, fibers and other filtration components to form a thermally bonded filtration media. The filtration media can be used in filter units, such as breather caps. Such filter units can be placed in the stream of a mobile fluid and can remove a particulate and/or fluid mist load from the mobile stream. The unique combination of media fiber, bicomponent binder fiber and other filtration additives and components provide a filtration media having unique properties in filtration applications.

WO 2007/133403 A3

INTERNATIONAL SEARCH REPORT

International application No
PCT/US2007/009963

A. CLASSIFICATION OF SUBJECT MATTER
INV. B01D39/20 B01D39/16

According to International Patent Classification (IPC) or to both national classification and IPC

B. FIELDS SEARCHED

Minimum documentation searched (classification system followed by classification symbols)
B01D

Documentation searched other than minimum documentation to the extent that such documents are included in the fields searched

Electronic data base consulted during the international search (name of data base and, where practical, search terms used)
EPO-Internal

C. DOCUMENTS CONSIDERED TO BE RELEVANT

Category*	Citation of document, with indication, where appropriate, of the relevant passages	Relevant to claim No.
X	US 6 419 721 B1 (HUNTER ALEX GEORGE [GB]) 16 July 2002 (2002-07-16) cited in the application column 2, lines 26-47; claims 1,2 column 3, lines 9-39; example	1,6,9,11
A	US 5 575 832 A (BOYD STEVEN T [CA]) 19 November 1996 (1996-11-19) cited in the application	1-17,20
X	column 4, lines 39-49; figures 3-5	18,19
P,X	WO 2006/052732 A (DONALDSON CO INC [US]; DEMA KEH B [US]; ISRAEL JOE [US]; JONES DEREK O) 18 May 2006 (2006-05-18) the whole document	1-20

-/--

[X] Further documents are listed in the continuation of Box C. [X] See patent family annex.

* Special categories of cited documents :

"A" document defining the general state of the art which is not considered to be of particular relevance
"E" earlier document but published on or after the international filing date
"L" document which may throw doubts on priority claim(s) or which is cited to establish the publication date of another citation or other special reason (as specified)
"O" document referring to an oral disclosure, use, exhibition or other means
"P" document published prior to the international filing date but later than the priority date claimed

"T" later document published after the international filing date or priority date and not in conflict with the application but cited to understand the principle or theory underlying the invention
"X" document of particular relevance; the claimed invention cannot be considered novel or cannot be considered to involve an inventive step when the document is taken alone
"Y" document of particular relevance; the claimed invention cannot be considered to involve an inventive step when the document is combined with one or more other such documents, such combination being obvious to a person skilled in the art.
"&" document member of the same patent family

Date of the actual completion of the international search	Date of mailing of the international search report
9 November 2007	21/11/2007

Name and mailing address of the ISA/	Authorized officer
European Patent Office, P.B. 5818 Patentlaan 2 NL – 2280 HV Rijswijk Tel. (+31-70) 340-2040, Tx. 31 651 epo nl, Fax: (+31-70) 340-3016	Focante, Francesca

4

Form PCT/ISA/210 (second sheet) (April 2005)

INTERNATIONAL SEARCH REPORT

International application No
PCT/US2007/009963

C(Continuation). DOCUMENTS CONSIDERED TO BE RELEVANT

Category*	Citation of document, with indication, where appropriate, of the relevant passages	Relevant to claim No.
P,X	WO 2006/052656 A (DONALDSON CO INC [US]; DEMA KEH B [US]; OLSON LINDA M [US]) 18 May 2006 (2006-05-18) claims 1-12	1-4, 6-10, 12-14

4

Form PCT/ISA/210 (continuation of second sheet) (April 2005)

INTERNATIONAL SEARCH REPORT

Information on patent family members

International application No
PCT/US2007/009963

Patent document cited in search report	Publication date	Patent family member(s)	Publication date
US 6419721 B1	16-07-2002	DE 69909284 D1	07-08-2003
		DE 69909284 T2	03-06-2004
		EP 1077756 A1	28-02-2001
		GB 2335867 A	06-10-1999
		WO 9951319 A1	14-10-1999
US 5575832 A	19-11-1996	NONE	
WO 2006052732 A	18-05-2006	AU 2005304879 A1	18-05-2006
		CA 2586636 A1	18-05-2006
		EP 1827649 A2	05-09-2007
		KR 20070085812 A	27-08-2007
WO 2006052656 A	18-05-2006	AU 2005304988 A1	18-05-2006
		CA 2586658 A1	18-05-2006
		EP 1812137 A1	01-08-2007
		KR 20070085813 A	27-08-2007
		US 2006096932 A1	11-05-2006