(12) STANDARD PATENT (11) Application No. **AU 2017229562 B2**
(19) AUSTRALIAN PATENT OFFICE

(54) Title
Method for processing images

(51) International Patent Classification(s)
G06T 5/50 (2006.01)

(21) Application No: **2017229562** (22) Date of Filing: **2017.03.13**

(87) WIPO No: **WO17/153700**

(30) Priority Data

(31) Number	(32) Date	(33) Country
1652068	**2016.03.11**	**FR**

(43) Publication Date: **2017.09.14**
(44) Accepted Journal Date: **2022.01.06**

(71) Applicant(s)
Bertin Technologies

(72) Inventor(s)
Soulie, Emmanuel;Oriot De La Chapelle, David;Diaz, Damien

(74) Agent / Attorney
Davies Collison Cave Pty Ltd, Level 15 1 Nicholson Street, MELBOURNE, VIC, 3000, AU

(56) Related Art
CATALAN R et al.: "Fusion of Multispectral and Panchromatic Images Using Improved IHS and PCA Mergers Based on Wavelet Decomposition" IEEE Transactions on Geoscience and Remote Sensing, Vol 42, No. 6 1 June 2004

(12) DEMANDE INTERNATIONALE PUBLIÉE EN VERTU DU TRAITÉ DE COOPÉRATION EN MATIÈRE DE BREVETS (PCT)

(19) Organisation Mondiale de la Propriété Intellectuelle
Bureau international

(43) Date de la publication internationale
14 septembre 2017 (14.09.2017)

WIPO | PCT

(10) Numéro de publication internationale
WO 2017/153700 A1

(51) Classification internationale des brevets : *G06T 5/50* (2006.01)

(21) Numéro de la demande internationale : PCT/FR2017/050566

(22) Date de dépôt international : 13 mars 2017 (13.03.2017)

(25) Langue de dépôt : français

(26) Langue de publication : français

(30) Données relatives à la priorité :
1652068 11 mars 2016 (11.03.2016) FR

(71) Déposant : **BERTIN TECHNOLOGIES** [FR/FR]; 10 bis, avenue Ampère, Parc d'activités du Pas du Lac, 78180 MONTIGNY LE BRETONNEUX (FR).

(72) Inventeurs : **SOULIE, Emmanuel**; Rue Borely - Résidence Le Gauguin - Bât. A6, 13120 GARDANNE (FR). **ORIOT DE LA CHAPELLE, David**; 9, rue Eugène Salesses, 13250 SAINT CHAMAS (FR). **DIAZ, Damien**; 10, rue Severina, 13480 CALAS (FR).

(74) Mandataire : **GUTMANN, Ernest**; Yves Plasseraud SAS, 3, rue Auber, 75009 PARIS (FR).

(81) États désignés *(sauf indication contraire, pour tout titre de protection nationale disponible)* : AE, AG, AL, AM, AO, AT, AU, AZ, BA, BB, BG, BH, BN, BR, BW, BY, BZ, CA, CH, CL, CN, CO, CR, CU, CZ, DE, DJ, DK, DM, DO, DZ, EC, EE, EG, ES, FI, GB, GD, GE, GH, GM, GT, HN, HR, HU, ID, IL, IN, IR, IS, JP, KE, KG, KH, KN, KP, KR, KW, KZ, LA, LC, LK, LR, LS, LU, LY, MA, MD, ME, MG, MK, MN, MW, MX, MY, MZ, NA, NG, NI, NO, NZ, OM, PA, PE, PG, PH, PL, PT, QA, RO, RS, RU, RW, SA, SC, SD, SE, SG, SK, SL, SM, ST, SV, SY, TH, TJ, TM, TN, TR, TT, TZ, UA, UG, US, UZ, VC, VN, ZA, ZM, ZW.

(84) États désignés *(sauf indication contraire, pour tout titre de protection régionale disponible)* : ARIPO (BW, GH,

[Suite sur la page suivante]

(54) Title : METHOD FOR PROCESSING IMAGES

(54) Titre : PROCÉDÉ DE TRAITEMENT D'IMAGES

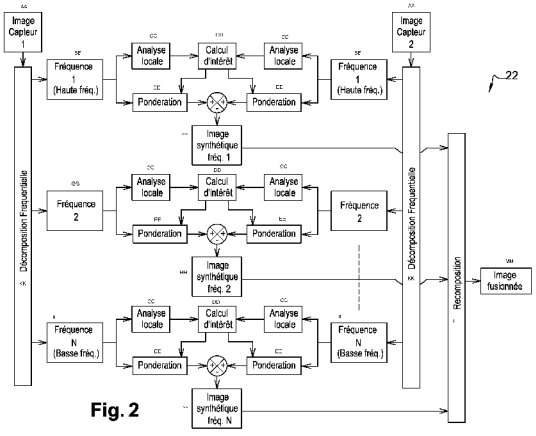

Fig. 2

AA Sensor image 1
BB Frequency 1 (High freq.)
CC Local analysis
DD Calculation of interest
EE Weighting
FF Synthetic image freq. 1
GG Frequency 2
HH Synthetic image freq. 2
II Frequency N (low freq.)
JJ Synthetic image freq. N
KK Frequency decomposition
LL Recomposition
MM Fused image

(57) **Abstract** : The invention relates to a method (10) for processing images using a first image sensor covering the visible domain and a second sensor covering the infrared domain. According to the invention, the method consists in: a) acquiring (12) a first image I_1 of said given zone of space using the first image sensor; b) acquiring (14) a second image I_2 of said given zone of space using the second image sensor; c) decomposing the first image I_1 so as to obtain at least one image of luminance I_{1L}; d) obtaining an image I_f resulting from digitally stitching (22) the image of luminance I_{1L} and the second image I_2; and e) adding colour information to the stitched image I_f or in the stitching step d).

(57) **Abrégé** : L'invention concerne un procédé (10) de traitement d'images à l'aide d'un premier capteur d'images couvrant le domaine visible et d'un second capteur couvrant le domaine infra-rouge. Selon l'invention, le procédé consiste à : a) acquérir (12) une première image I_1 de ladite zone d'espace donnée à l'aide du premier capteur d'images, b) acquérir (14) une seconde image I_2 de ladite zone d'espace donnée à l'aide du second capteur d'images, c) réaliser une décomposition de la première image I_1 de manière à obtenir au moins une image de luminance I_{1L}, d) à obtenir une image I_f résultant de la fusion numérique (22) de l'image de luminance I_{1L} et de la seconde image I_2, e) à ajouter une information de couleur à l'image de fusion I_f ou lors de l'étape d) de fusion.

WO 2017/153700 A1

GM, KE, LR, LS, MW, MZ, NA, RW, SD, SL, ST, SZ, TZ, UG, ZM, ZW), eurasien (AM, AZ, BY, KG, KZ, RU, TJ, TM), européen (AL, AT, BE, BG, CH, CY, CZ, DE, DK, EE, ES, FI, FR, GB, GR, HR, HU, IE, IS, IT, LT, LU, LV, MC, MK, MT, NL, NO, PL, PT, RO, RS, SE, SI, SK, SM, TR), OAPI (BF, BJ, CF, CG, CI, CM, GA, GN, GQ, GW, KM, ML, MR, NE, SN, TD, TG).

Publiée :

— *avec rapport de recherche internationale (Art. 21(3))*

2017229562 22 Nov 2021

The invention relates to an image processing method intended for discriminating analysis of a given observed zone of space. The discriminating analysis may for example consist of threat detection.

In a field of operations, it may be necessary to have optical threat detection tools/devices available, both during the daytime and in periods of lower luminosity, particularly at night.

Devices are known that comprise a casing housing two image sensors, a first of which is capable of covering a first spectral range and a second of which is capable of covering a second spectral range which is different from the first spectral range, wherein the first and second image sensors are capable of forming images of the same given zone of space and processing means capable of detecting a threat located in said zone based on the images obtained from the first sensor and/or the second sensor.

Use of several image sensors capable of covering different spectral ranges allows detection of a large number of threats, particularly threats having very different wavelengths. It is also possible to distinguish several types of threat, depending on whether they are detected by the first sensor and/or by the second sensor.

The processing means implemented in this type of device do not however allow use under conditions of low luminosity, such as those encountered at night, so that the data displayed by the sensors usually do not prove sufficiently relevant for an observer.

It is desired to overcome or alleviate one or more difficulties of the prior art, or to at least provide a useful alternative.

In accordance with the present invention, there is provided an image processing method using a device comprising at least one casing comprising at least one image sensor covering a first spectral range of wavelengths of the visible spectrum, and at least one second image sensor covering a second spectral range of wavelengths of the infra-red spectrum, wherein the

2017229562 22 Nov 2021

first and second sensors are configured to form images of a same zone of space, wherein the method involves:

a) using the first image sensor to acquire a first image I_1 of said given zone of space, the first image being generated from wavelengths of the visible spectrum,

b) using the second image sensor to acquire a second image I_2 of said given zone of space, the second image being generated from wavelengths of the infra-red spectrum,

c) performing a decomposition of the first image I_1 so as to obtain at least one luminance image I_{1L},

d) obtaining an image I_f resulting from digital fusion of the luminance image I_{1L} and of the second image I_2, and

adding colour information to the fusion image I_f.

Digital fusion of two images (in this case I_{1L} and I_2,) means pixel-level fusion; i.e. fusion may be performed directly based on the pixel values of the images, on the entirety of each image.

Unlike the image processing methods of the prior art, the invention may provide for analysing the quantity of data of each of respectively the first image I_1 obtained in the visible range and second image I_2, obtained in the infra-red range and digitally fusing them into a new fusion image I_f and adding colour information. In this manner, the final image obtained makes it possible to restore to a user an image containing colour information more easily interpretable by a human eye owing to its high sensitivity to visible wavelengths.

According to another characteristic, the method may involve, prior to stage c), adapting the dimensions of that of the first image I_1 and of the second image I_2 having the lowest resolution to the dimensions of the other of the first image and the second image.

This deformation stage furthermore serves to perform operators of enlargement, rotation, shift and correction of the geometric aberrations on the image having the lowest resolution.

2017229562 22 Nov 2021

Prior to stage c), the method may also involve matching the dynamics of the first image to the dynamics of the second image.

This adaptation of dynamics essentially aims to make the first and second images comparable and allow extraction of a maximum amount of data from the images during the subsequent stages.

According to one particular embodiment of the invention, the digital fusion includes a stage of carrying out successive spatial frequency decompositions n of the luminance image I_{1L} and of the second image I_2.

These frequency decompositions make it possible to interpret the contents of each of the images of luminance I_{1L} and of the second image I_2 locally, i.e. at the level of each pixel analysed.

According to another characteristic of the method, the digital fusion stage may involve:

i. carrying out decompositions, noted respectively F_n^{1L} and F_n^2, into successive spatial frequencies n of the luminance image I_{1L} and of the second image I_2,

ii. performing an energy calculation in at least some of the zones of the images F_n^{1L}, F_n^2 each associated with a frequency component n,

iii. calculating a weighting image P_n^{1L}, P_n^2, for each of the images F_n^{1L}, F_n^2 associated with a frequency component n, based on the local analysis performed at the preceding stage,

iv. for each image F_n^{1L}, F_n^2 associated with a frequency component, performing the following calculation:

$$F'_n(x,y) = P_n^{1L}(x,y) \cdot F_n^{1L}(x,y) + P_n^2(x,y) \cdot F_n^2(x,y)$$

v. performing a recombination of all the images F'_n each associated with a frequency component n, so as to obtain a fused image I_f of all the spatial frequencies.

Digital fusion of the luminance image I_{1L} and of the second image I_2 may be based on a frequency analysis and contrasts of the images as performed by the human eye.

22 Nov 2021 2017229562

In one particular embodiment of the method, the decomposition into spatial frequencies involves successively applying an averaging or low-pass filter to each luminance image I_{1L} and second image I_2, according to the following equation:

$$F_n^{1L\text{ ou }2} = G_n = G_{n-1} * S$$

$$\text{where } G_1 = I_e * S$$

S denotes a low-pass filter

I_e denotes the input image I_{1L} or I_2

In practice, the image $F_n^{1L\text{ ou }2}$ containing the highest frequency is represented by $F_1^{1L\text{ ou }2}$ and that containing the lowest frequency is represented by $F_h^{1L\text{ ou }2}$ where h represents the number of convolution operations applied to the input image I_e.

Likewise in a practical embodiment of the invention, the stage ii) involves calculating the energy according to the following formulation:

$$E_n^{1L\text{ ou }2}(x,y) = \mathrm{Var}\left(F_n^{1L\text{ ou }2}\left(\left[x-\frac{k_x}{2}, x+\frac{k_x}{2}\right], \left[y-\frac{k_y}{2}, y+\frac{k_y}{2}\right]\right)\right)$$

where k_x and $k_y$represent the dimensions of an analysis window.

This energy is calculated as a local variance in a window of dimensions k_xx k_y.

The weighted images P_n^1, P_n^2 can be obtained as follows:

$$P_n^{1L}(x,y) = \frac{\Delta E_n^{max}(x,y) + \Delta E_n(x,y)}{2 \cdot \Delta E_n^{max}}$$

$$P_n^2(x,y) = \frac{\Delta E_n^{max}(x,y) - \Delta E_n(x,y)}{2 \cdot \Delta E_n^{max}}$$

Where: $\Delta E_n(x,y) = E_n^{1L}(x,y) - E_n^2(x,y)$ and $\Delta E_n^{max} = \max(\Delta E_n(x,y))$,

$$P_n^{1\text{ ou }2}(x,y) \epsilon [0,1]$$

The weighting operators thus defined make it possible to favour the data derived from the first image in the visible spectrum or the second infra-red image, depending on their relevance. If the energy is equivalent in both images F_n^{1L} and F_n^2, the weighting operator will represent equivalently one

2017229562 22 Nov 2021

and the other of the images which will not be the case if the energies prove to be different.

Finally, the recombination stage involves performing the following calculation:

$$I_f = \sum_{n=1}^{h} F'_n$$

where h represents the number of frequency components.

When the colour has a critical aspect of discrimination/identification for the observer, it may be preferable not to modify the colorimetry of the final image displayed in an observation eyepiece.

To this end, stage c) therefore preferably involves performing a decomposition of the first image I_1 into a luminance image I_{1L} and two chrominance images I_{1C_b} and I_{1C_r}. Stage e) then involves recombining or resynchronising the fusion image I_f with the chrominance images I_{1C_b} and I_{1C_r}.

In a practical embodiment, the first sensor is capable of covering a spectral range belonging to the interval included between 0.4 and 1.1 μm.

The second sensor may cover a spectral range belonging to the interval included between 7.5 and 14 μm.

Other details, characteristics and advantages will appear upon reading the following description given by way of a non-restrictive example while referring to the appended drawings wherein:

- figure 1 is a flow chart of the main processing stages performed using the method according to the invention;
- figure 2 is a flow chart of the main processing stages performed during the digital fusion stage.

Reference is first made to figure 1 which shows the principle of image acquisition and processing according to the invention. The image processing method according to the invention is intended to be implemented in a device comprising a casing housing at least two image sensors capable of covering

2017229562 22 Nov 2021

different spectral ranges.

By way of an example, the casing thus comprises a first image sensor covering a spectral range included between 0.4 and 1.1 µm located in the visible range and a second image sensor capable of covering a spectral range included between 7.5 and 14 µm located in the infra-red range. Both sensors are arranged in the casing so as to be capable of forming images of a same zone of space.

The method 10 according to the invention involves acquiring a first image I_1 in 12 of a given zone of space using the first sensor and acquiring a second image I_2 in 14 of the same zone of space using the second sensor.

Firstly, the second image I_2 undergoes recalibration on the first image I_1 in 16. This choice essentially results from the dimensions of the sensors used. Generally, infra-red sensors, such as the second sensor, have a lower resolution than sensors in the visible range such as the first sensor. For example, the first sensor may have an image resolution of 1280 by 1024 pixels for 10 bits and the second sensor may have an image resolution of 640 by 480 pixels for 14 bits. Therefore, recalibration essentially involves adapting the resolution of the second image obtained with the second sensor so that it corresponds to the resolution of the first image obtained with the first sensor in order to keep the resolution of the first best defined sensor intact.

This recalibration stage also involves performing complete distortion of the image in order to take account of the enlargement to be made, the rotation, offset and geometric aberrations. In order to perform the recalibration, elements of information can be used *a priori*, such as the virtually parallel position of the optical axes of the optical systems of the first and second sensors. It is furthermore possible to make the assumption that the corrections to be made to the second image I_2 are minimal.

During another stage 18, which can be performed immediately after acquisition of the first image I_1, a decomposition of the first image I_1 into a luminance image $\mathrm{I}_{1\mathrm{L}}$ and two chrominance images $\mathrm{I}_{1\mathrm{C_b}}$ and $\mathrm{I}_{1\mathrm{C_r}}$ is performed.

2017229562 22 Nov 2021

Since the image I_1 is a model image (RGB), this model image (RGB) needs to be converted into an image of a model defining a colorimetric space with three components, namely a luminance component and the two chrominance components. The values of each pixel vary between 0 and 255 for each R, G, and B channel.

An example of a model that can be used is the Y'CbCr model. Other models can be used, such as the Y'PbPr model, the Y'UV model, the TSL model or the Lab model. Generally speaking, any model with which one luminance component and two chrominance components can be obtained may be used.

Calculations with which conversion of a model image (RGB) into one luminance component I_1 and two chrominance components I_{1C_b} and I_{1C_r} can be performed according to a Y'CbCr model are provided here by way of non-limiting examples.

Thus, the image I_1 is broken down into:

- a luminance image noted I_{1L} calculated according to the equation: $I_{1L} = 0{,}299\,R + 0{,}587\,G + 0{,}114\,B$,
- a chrominance image I_{1C_b} calculated according to the equation: $I_{1C_b} = 0{,}1687\,R - 0{,}3313\,G + 0{,}5\,B + 128$,
- and a chrominance image I_{1C_r} calculated according to the equation: $I_{1C_r} = 0{,}5\,R - 0{,}4187\,G - 0{,}0813\,B + 128$.

For both models (RGB) and Y'CbCr, the pixel values for each channel vary in this case between 0 and 255.

During a subsequent stage 20, the method involves adapting the dynamics of the image I_{1L} with the second image I_2. As mentioned earlier, the first and second images are not acquired with the same dynamics, 10 bits for example for the first image and 14 bits for the second image. It is therefore important to bring the first and second images to a same scale that makes it possible to obtain information concerning each of the first and second images that can be compared. In practice, adaptation of the dynamics allows

2017229562 22 Nov 2021

adjustment of the dynamics of the luminance images I_{1L} and the two chrominance images I_{1C_b}, I_{1C_r} with the second image I_2.

During a subsequent stage 22, fusion of the luminance image I_{1C_b} with the second image I_2 is performed, thereby obtaining the image I_f.

Finally, in one or two final stages 24, colour information is added to the fusion image I_f so as to obtain in 30 a fused final image including colour information.

The actual fusion stage 22 will now be described in detail with reference to figure 2.

In order to be able to interpret the contents of each of the luminance images I_{1L} and of the second image I_2 locally, i.e. at the level of each pixel analysed, decomposition into spatial frequencies is performed. Thus, decomposition into spatial frequencies is performed for the luminance image I_{1L} and the second image I_2. Reference is made here to the images I_{1L} and I_2 which are images obtained following recalibration and adaptation of the dynamics.

Generally speaking, in order to obtain the first spatial frequency F1 (the highest frequency), the image is initially filtered by convolution with an averaging or "low-pass" filter K, which can adopt the form of a simple local average in a window of m by m pixels, i.e. the form of a Gaussian shape that subsequently weights the pixels of this same calculation window by coefficients following a Gaussian shape. A "filtered" implying "low-pass filtered" image G_1 is obtained in this manner:

$$\mathrm{G}_1 = \mathrm{I}_\mathrm{e} * \mathrm{S}$$

This filtered image is subtracted from the original image. An image F1 that only contains high frequencies is obtained in this case:

$$\mathrm{F}_1 = \mathrm{I}_\mathrm{e} - \mathrm{G}_1 = \mathrm{I}_\mathrm{e} - (\mathrm{I}_\mathrm{e} * \mathrm{S})$$

The second spatial frequency F_2 is obtained by reproducing the previous pattern, but using the previous filtered image F_1 as the input image. This filtered image is therefore filtered again using the same low-pass filter

2017229562 22 Nov 2021

as before and an image F_2 is obtained by difference:

$$F_2 = G_1 - G_2 = G_1 - (G_1 * S)$$

By recurrence, the following is obtained

$G_{n+1} = (G_n * S)$ and $F_{n+1} = G_n - (G_n * S)$

The last frequency h will be represented by the last convolution and will also represent the local average level of the image:

$$F_h = G_h = G_{h-1} * S$$

Thus, one will note $F_n^{1L} = G_{n-1} * S$ with $G_1 = I_{1L} * S$ and $F_n^2 = G_{n-1} * S$ with $G_1 = I_2 * S$.

During a second processing stage, an energy calculation in at least some of the zones of the images of each of the frequency components F_n^{1L} and F_n^2 is performed. It is chosen here to carry out an analysis compatible with real-time processing allowing instantaneous restitution of data to an observer. To do this, an analysis by comparison of the energies of each of the images F_n^{1L} and F_n^2 is performed. This analysis involves calculating the local variance in a window of dimensions kx × ky centred on the pixel analysed, which yields:

$$E_n^{1L}(x,y) = \mathrm{Var}\left(F_n^{1L}\left(\left[x - \frac{k_x}{2}, x + \frac{k_x}{2}\right], \left[y - \frac{k_y}{2}, y + \frac{k_y}{2}\right]\right)\right)$$

and,

$$E_n^{2}(x,y) = \mathrm{Var}\left(F_n^{2}\left(\left[x - \frac{k_x}{2}, x + \frac{k_x}{2}\right], \left[y - \frac{k_y}{2}, y + \frac{k_y}{2}\right]\right)\right)$$

During a subsequent stage, the method involves calculating a weighting image P_n^{1L}, P_n^2, for each of the images F_n^{1L}, F_n^2 associated with a frequency component n, based on the local analysis performed at the preceding stage. For this purpose, the difference of these energies is calculated:

$$\Delta E_n(x,y) = E_n^{BNL}(x,y) - E_n^{IR}(x,y)$$

The maximum is subsequently calculated:

$$\Delta E_n^{max} = \max\left(\Delta E_n(x,y)\right)$$

2017229562 22 Nov 2021

Next, a weighting image is calculated for each frequency component, with these weightings being such that:

$$P_n^{1L}(x,y) = \frac{\Delta E_n^{max} + \Delta E_n(x,y)}{2 \cdot \Delta E_n^{max}}$$

$$P_n^{2}(x,y) = \frac{\Delta E_n^{max} - \Delta E_n(x,y)}{2 \cdot \Delta E_n^{max}}$$

$$\text{with } P_n(x,y) \in [0,1]$$

The weighting images for each spatial frequency $P_n^{1L}(x,y)$ and $P_n^{2}(x,y)$ are subsequently applied to the respective images F_n^{1L} and F_n^{2} and are finally summed according to the following equation:

$$F'_n(x,y) = P_n^{1L}(x,y) \cdot F_n^{1L}(x,y) + P_n^{2}(x,y) \cdot F_n^{2}(x,y)$$

The synthetic image $F'_n(x,y)$ for the spatial frequency n thus closer, owing to the weighting applied, to the image F_n^{1L} or F_n^{2} which contains the most information.

Recomposition of the spatial frequencies is the reverse process of stage 1. One therefore begins with the lowest frequency h, i.e. the last obtained from the decomposition described above, resulting in:

$$G'_h = F'_h$$

Recomposition is subsequently performed using the previous spatial frequencies:

$$G'_{h-1} = F'_{h-1} + G'_h$$

If I_f is the result of recombination, then:

$$I_f = G_0 = \sum_{n=1}^{h} F'_n$$

where h represents the number of frequency components.

After obtaining the fusion image I_f, the method involves adding colour information to the fusion image I_f.

Hence, the method involves using the colour of the first sensor. For this purpose, addition of the colour information is performed by summing or

2017229562 22 Nov 2021

resynchronising the fusion image I_f with the chrominance images I_{1C_b} and I_{1C_r}, the dynamics of which have been adapted as mentioned above.

In practice, it will be understood that this type of addition of colour information will prove less and less relevant as the level of luminosity of the observed area decreases. Indeed, the colour information derived from the chrominance images will gradually decrease.

It should be remembered that levels of darkness have long been standardised according to the table below, which is repeated for information purposes and is well known from the state of the art.

Level of Darkness	1	2	3	4	5
Source of Light					
	Full moon	Half moon	Partial moon	Bright starry sky	Covered sky
Values (mlux)	1000 ⇔ 40	40 ⇔ 10	10 ⇔ 2	2 ⇔ 0.7	0.7 ⇔ 0

The units indicated in the table above are in lux, which is the unit derived from the international system, such that 1 lux=1 cd·sr·m^{-2}. This table shows the darkness level values depending on the illuminance, a type of sky being associated with each darkness level.

Throughout this specification and claims which follow, unless the context requires otherwise, the word "comprise", and variations such as "comprises" and "comprising", will be understood to imply the inclusion of a stated integer or step or group of integers or steps but not the exclusion of any other integer or step or group of integers or steps.

The reference in this specification to any prior publication (or information derived from it), or to any matter which is known, is not, and should not be taken as an acknowledgment or admission or any form of suggestion that that prior publication (or information derived from it) or known matter forms part of the common general knowledge in the field of endeavour to which this specification relates.

2017229562 22 Nov 2021

THE CLAIMS DEFINING THE INVENTION ARE AS FOLLOWS:

1. An image processing method using a device comprising at least one casing comprising at least one image sensor covering a first spectral range of wavelengths of the visible spectrum, and at least one second image sensor covering a second spectral range of wavelengths of the infra-red spectrum, wherein the first and second sensors are configured to form images of a same zone of space, wherein the method involves:

a) using the first image sensor to acquire a first image I_1 of said given zone of space, the first image being generated from wavelengths of the visible spectrum,

b) using the second image sensor to acquire a second image I_2 of said given zone of space, the second image being generated from wavelengths of the infra-red spectrum,

c) performing a decomposition of the first image I_1 so as to obtain at least one luminance image I_{1L},

d) obtaining an image I_f resulting from digital fusion of the luminance image I_{1L} and of the second image I_2, and

e) adding colour information to the fusion image I_f.

2. Method according to claim 1, characterised in that it involves, prior to stage c), adapting the dimensions of that of the first image I_1 and of the second image I_2 having the lowest resolution to the dimensions of the other of the first image and the second image.

3. Method according to claim 1 or 2, characterised in that it involves, prior to stage c), matching the dynamics of the first image I_1 to the dynamics of the second image I_2.

4. Method according to any of claims 1 to 3, characterised in that the digital fusion includes a stage of carrying out successive spatial frequency decompositions n of the luminance image I_{1L} and of the second image I_2.

2017229562 22 Nov 2021

5. Method according to any of claims 1 to 4, characterised in that the digital fusion involves:

i. carrying out decompositions, noted respectively F_n^{1L} and F_n^2, into successive spatial frequencies n of the luminance image I_{1L} and of the second image I_2,

ii. performing an energy calculation in at least some of the zones of the images F_n^{1L}, F_n^2 each associated with a frequency component n,

iii. calculating a weighting image P_n^{1L}, P_n^2, for each of the images F_n^{1L}, F_n^2 associated with a frequency component n, based on the local analysis performed at the preceding stage,

iv. for each image F_n^{1L}, F_n^2 associated with a frequency component, performing the following calculation:

$$\mathrm{F'_n}(x,y) = \mathrm{P_n^{1L}}(x,y) \cdot \mathrm{F_n^{1L}}(x,y) + \mathrm{P_n^2}(x,y) \cdot \mathrm{F_n^2}(x,y)$$

v. performing a recombination of all the images $\mathrm{F'_n}$ each associated with a frequency component n, so as to obtain a fused image $\mathrm{I_f}$ of all the spatial frequencies.

6. Method according to claim 4 or 5, characterised in that the decomposition into spatial frequencies involves successively applying an averaging or low-pass filter to each luminance image I_{1L} and second image I_2, according to the following equation:

$$\mathrm{F_n^{1L\ ou\ 2}} = \mathrm{G_n} = \mathrm{G_{n-1}} * \mathrm{S}$$

where $\mathrm{G_1} = \mathrm{I_e} * \mathrm{S}$

S denotes a low-pass filter

$\mathrm{I_e}$ denotes the input image I_{1L} or $\mathrm{I_2}$

7. Method according to claim 5 or claims 6 when dependent upon claim 5, characterised in that stage ii) involves calculating the energy according to the following formulation:

$$\mathrm{E_n^{1L\ ou\ 2}}(x,y) = \mathrm{Var}\left(\mathrm{F_n^{1L\ ou\ 2}}\left(\left[\mathrm{x} - \frac{\mathrm{k_x}}{2}, \mathrm{x} + \frac{\mathrm{k_x}}{2}\right], \left[\mathrm{y} - \frac{\mathrm{k_y}}{2}, \mathrm{y} + \frac{\mathrm{k_y}}{2}\right]\right)\right)$$

2017229562 22 Nov 2021

where k_x and k_y represent the dimensions of an analysis window.

8. Method according to claim 7, characterised in that the weighting images P_n^1, P_n^2 are obtained as follows:

$$P_n^{1L}(x,y) = \frac{\Delta E_n^{max}(x,y) + \Delta E_n(x,y)}{2 \cdot \Delta E_n^{max}}$$

$$P_n^{2}(x,y) = \frac{\Delta E_n^{max}(x,y) - \Delta E_n(x,y)}{2 \cdot \Delta E_n^{max}}$$

Where: $\Delta E_n(x,y) = E_n^{1L}(x,y) - E_n^{2}(x,y)$ and $\Delta E_n^{max} = \max(\Delta E_n(x,y))$

9. Method according to any of claim 5, claim 6 when dependent upon claim 5, claim 7 and claim 8, characterised in that the recombination stage involves performing the following calculation:

$$I_f = \sum_{n=1}^{h} F'_n$$

where h represents the number of frequency components.

10. Method according to any of claims 1 to 9, characterised in that stage c) involves carrying out a decomposition of the first image I_1 into a luminance image I_{1L} and two chrominance images I_{1C_b} and I_{1C_r}.

11. Method according to claim 10, characterised in that stage e) involves summing the fusion image I_f with the chrominance images I_{1C_b} and I_{1C_r}.

12. Method according to any of the preceding claims, characterised in that the first sensor is capable of covering a spectral range belonging to the interval included between 0.4 and 1.1 μm.

13. Method according to any of the preceding claims, characterised in that the second sensor is configured to cover a spectral range belonging to the interval included between 7.5 and 14 μm.

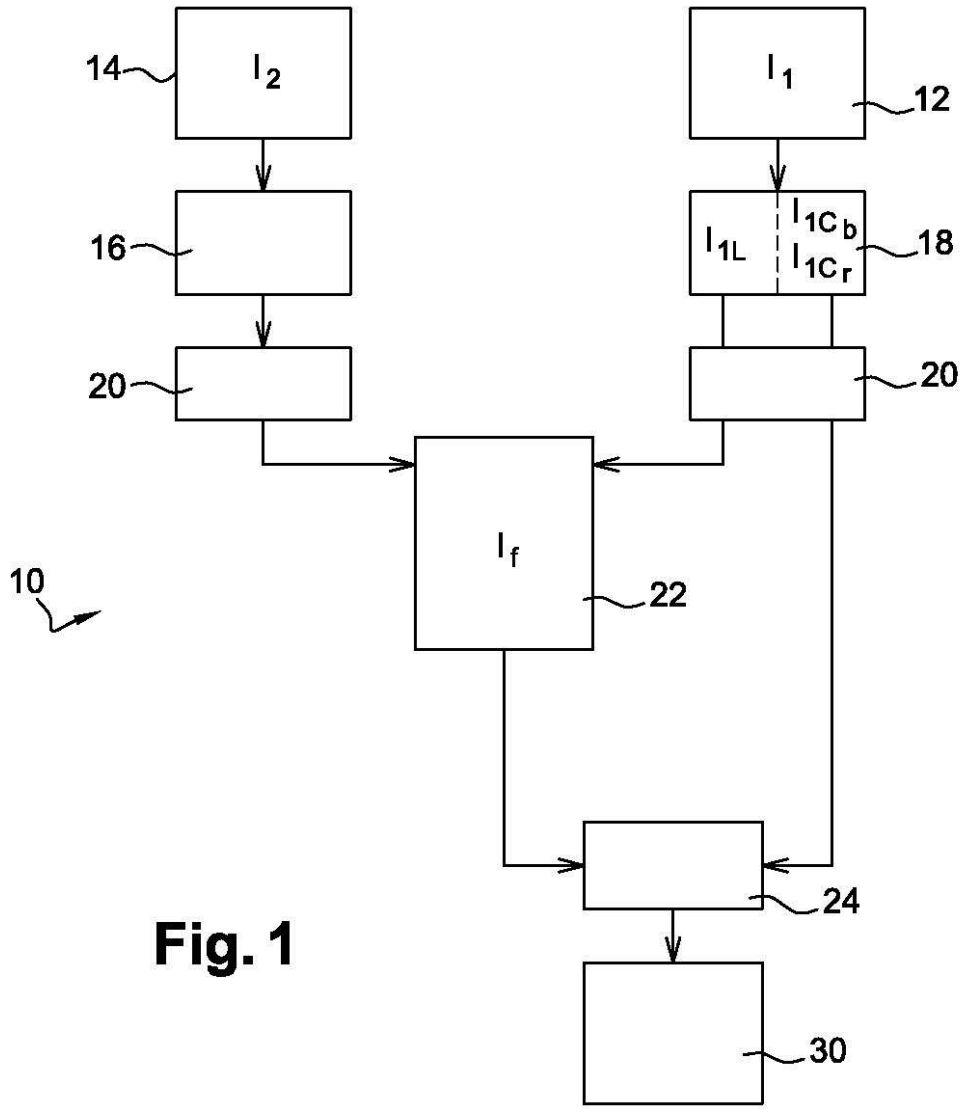

Fig. 1

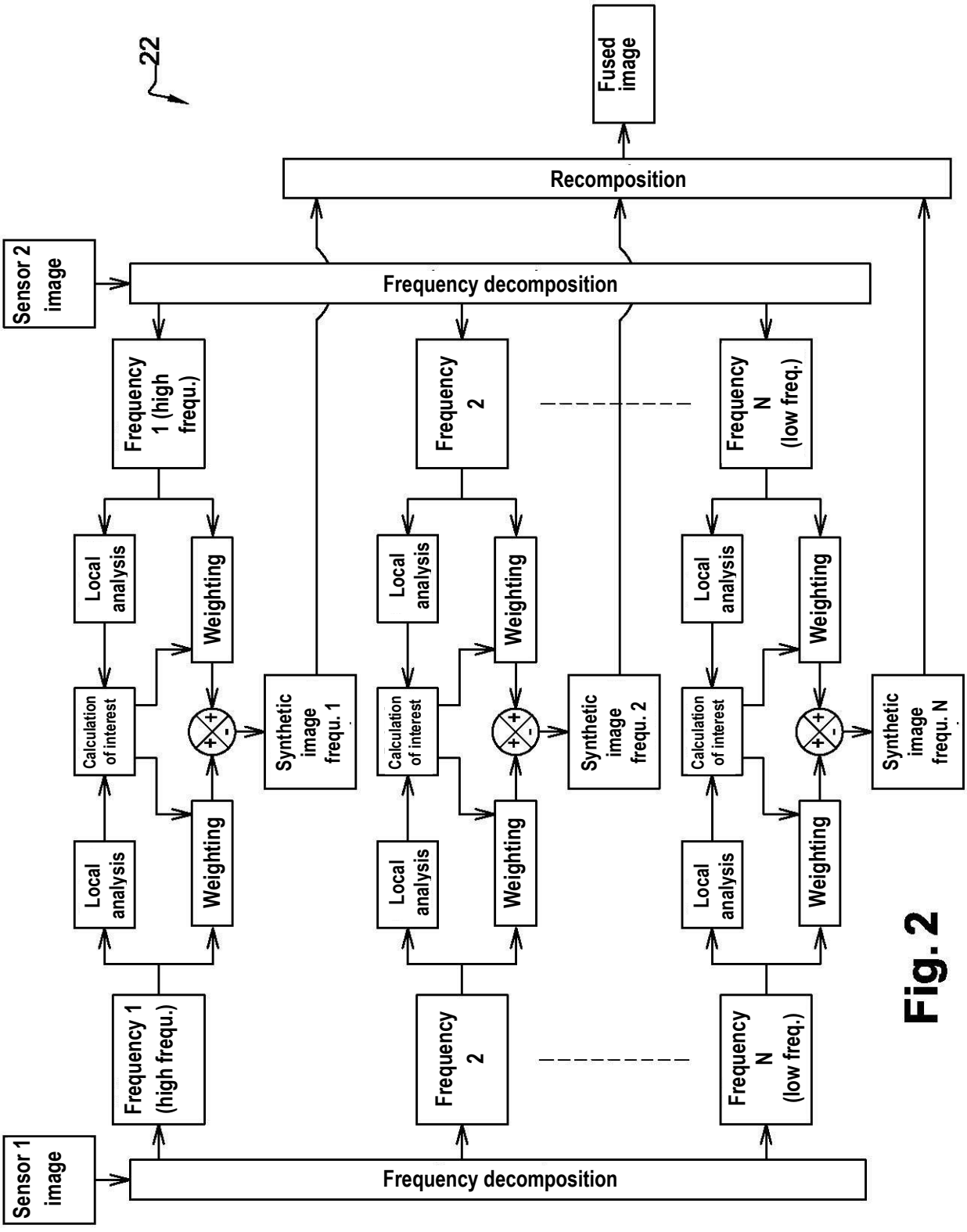
22
Fused image
Recomposition
Sensor 2 image
Frequency decomposition
Frequency 1 (high frequ.)
Frequency 2
Frequency N (low freq.)
Local analysis
Weighting
Calculation of interest
Synthetic image frequ. 1
Synthetic image frequ. 2
Synthetic image frequ. N
Sensor 1 image

Fig. 2