April 13, 1937. F. CONWAY 2,077,220

FREEZING TRAY AND METHOD OF MAKING THE SAME

Filed March 1, 1935

Fig. 1.

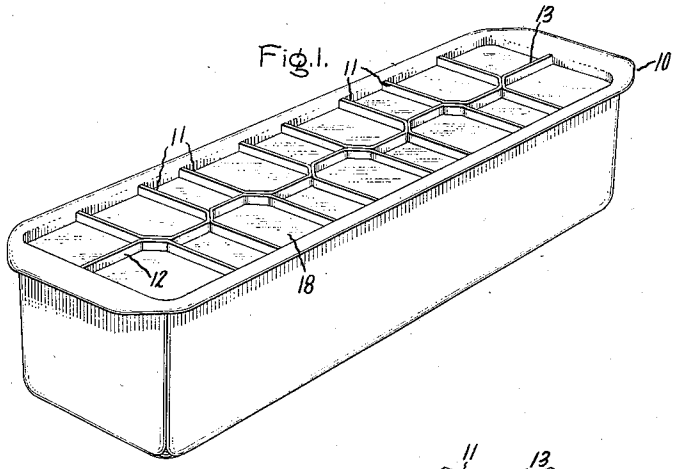

Fig. 2.

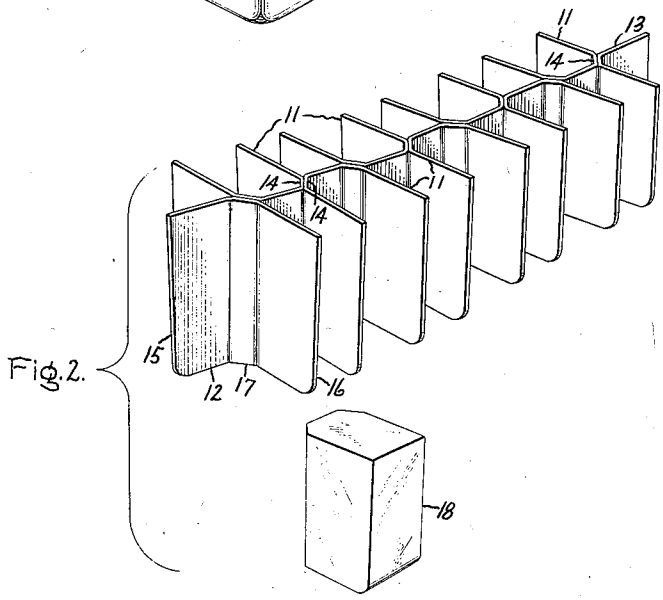

Inventor:
Frank Conway,
by Harry E. Dunham
His Attorney.

Patented Apr. 13, 1937

2,077,220

UNITED STATES PATENT OFFICE

2,077,220

FREEZING TRAY AND METHOD OF MAKING THE SAME

Frank Conway, Schenectady, N. Y., assignor to General Electric Company, a corporation of New York

Application March 1, 1935, Serial No. 8,867

10 Claims. (Cl. 113—116)

My invention relates to freezing trays for refrigerating machines, and more particularly to partition assemblies for such trays and methods of making the same.

Many types of refrigerating machines, and particularly those adapted for domestic use, are provided with freezing trays which are usually relatively shallow, rectangular, metallic containers. These trays are filled with water, ingredients for ice-cream, or other substances, to be frozen and are then placed on a surface of the cooling unit of the refrigerating machine in order to freeze the contents of the tray.

A partition assembly is commonly provided in freezing trays of this type in order to divide the same into a number of small compartments so that the ice, or other substance, will be frozen in the form of small blocks or cubes. The partition assembly is preferably removable from the freezing tray. After the ice, or the like, has been frozen in the tray, the assembly and the ice contained therein may be removed from the tray and then the ice blocks or cubes may be removed individually from the partition assembly.

It is an object of my invention to provide a partition assembly for a freezing tray of the type described which is economical to manufacture and which is of rugged construction. I accomplish this object by providing an arrangement utilizing a number of parts having angularly disposed portions forming longitudinal and transverse partition sections for a freezing tray. The duplicate parts may be readily punched, or otherwise formed, from sheet material and are secured together to form a partition assembly.

It is a further object of my invention to provide an improved method of making a partition assembly for freezing trays of the type described which requires a minimum number of operations and which is economical to carry out.

Further objects and advantages of my invention will become apparent as the following description proceeds and the features of novelty which characterize my invention will be pointed out with particularity in the claims annexed to and forming a part of this specification.

For a better understanding of my invention, reference may be had to the accompanying drawing in which Fig. 1 is a perspective view of a freezing tray containing a partition assembly embodying my invention; and Fig. 2 is a perspective view of the partition assembly shown in the freezing tray in Fig. 1, and of one of the blocks of ice removed therefrom.

Referring to the drawing, in Fig. 1 I have shown a shallow, rectangular, metal freezing tray 10. The tray 10 contains a removable partition assembly, which is made of a series of duplicate or similar U-shaped partition elements 11 and a pair of end partition elements 12 and 13. The partition elements are preferably made of flexible sheet metal, such as aluminum, and are punched, or otherwise formed, from a sheet of such metal and bent into the desired shape. Each of the partition elements thus includes a central or base portion and an angularly disposed transverse or leg portion at each end thereof. The corners of the U-shaped partition elements 11 are flattened at 14 in order to provide surfaces at which the adjacent partition elements may be rigidly secured together. The U-shaped partition elements 11 are arranged in two sets, one set on each side of the assembly. The partition elements in each set are arranged with the legs thereof in parallel relationship and extending outwardly toward the adjacent side of the partition assembly. The partition elements of both sets are disposed in series relation, the elements of one set alternating with those of the other set, so that a partition element from one set is interposed between each pair of adjacent partition elements in the other set. The adjacent flattened corners 14 of the partition elements 11 are rigidly secured together in abutting relationship, preferably by the fusion of metal, as by spot welding, soldering, or the like, thus forming joints of good thermal conductivity between the adjacent partition elements.

The end partition element 12 having a longitudinal portion 15 and a transverse portion 16 arranged substantially at right angles to each other and connected by a flat portion 17 at the corner thereof is provided at one end of the partition assembly. The flattened portion 17 of the end partition element 12 is rigidly secured to the flattened portion 14 of the adjacent U-shaped partition element 11 by spot welding, or otherwise. The other end partition element 13 is similar in construction to the end partition element 12 and is secured to the opposite end of the partition assembly by spot welding, or otherwise, at the flattened corner portion 14 of the adjacent U-shaped partition element 11.

The central or base portions of the U-shaped partition elements form a longitudinal partition extending along the center of the freezing tray 10 and the laterally extending leg portions of the U-shaped partition elements which are angularly disposed with respect to the base portion form transverse partitions extending across the freezing tray 10, so that the latter is divided into a

plurality of small compartments by the grid thus formed, in which water may be frozen to form blocks of ice, such as a block 18. The lower corners of the partition elements 11 and end partition elements 12 and 13 are rounded in order to closely conform to the rounded inner edges of the tray 10.

The partition elements which constitute the partition assembly, described above, are preferably made of resilient sheet material in order that the longitudinal portion of the resulting partition assembly may be readily flexed in a lateral direction, as shown in Fig. 2. In removing blocks of ice from the freezing tray 10, the tray may be warmed by applying warm water to the bottom thereof. When the freezing tray 10 is warmed in this manner, the blocks of ice will be melted along the exterior sides thereof causing a breakage of the bond between the ice blocks and the freezing tray, so that the partition assembly and the blocks of ice contained therein may be readily removed from the freezing tray 10. After the partition assembly and the ice contained therein have been removed in this manner, the removal of the individual blocks of ice from the partition assembly is facilitated by the flexibility of the partition assembly. The blocks of ice are first removed from one side of the partition assembly and the longitudinal portion of the partition assembly is then bent outwardly. The legs of the partition elements 11 on the opposite side are consequently spread apart thus breaking the bond between their inner surfaces and the remaining blocks of ice contained therein so that the latter are allowed to fall freely therefrom, as shown by the block 18 in the drawing, for example.

It will be seen that I have provided a partition assembly for a freezing tray which may be made from a number of duplicate parts, which can be economically manufactured by punching them from ordinary sheet metal material. When these partition pieces are secured together, in the manner described above, they form a strong rugged structure which will withstand hard usage.

While I have shown a particular embodiment of my invention in connection with a rigid, metallic, freezing tray, I do not desire my invention to be limited to the particular construction shown and described and I intend, in the appended claims, to cover all modifications within the spirit and scope of my invention.

What I claim as new and desire to secure by Letters Patent of the United States is:

1. In combination with a freezing tray, a removable partition assembly comprising a plurality of similar flexible metallic partition elements, each of said elements having at least two angularly disposed portions, said partition elements being arranged with the surfaces thereof adjacent the corners between said angularly disposed portions in abutting relation and with said angularly disposed portions in spaced relation, said abutting surfaces being rigidly secured together.

2. In combination with a freezing tray, a removable partition assembly comprising a plurality of flexible metallic partition elements, each of said partition elements having at least two angularly disposed portions, said partition elements being arranged with the surfaces adjacent the corners between said angularly disposed portions disposed in abutting relation and with said angularly disposed portions in spaced relation, and means including fused metal for rigidly securing said abutting surfaces together.

3. In combination with a freezing tray, a removable partition assembly comprising a plurality of flexible metallic partition elements, each of said partition elements having a longitudinally extending portion and a transversely extending portion at each end of said longitudinally extending portion, said partition elements being arranged with the surfaces adjacent the corners between said transversely extending portions and said longitudinally extending portions disposed in abutting relation and with said transversely extending portions of said partition elements arranged in spaced relation, and means including fused metal for rigidly securing said abutting surfaces together.

4. In combination with a freezing tray, a removable partition assembly comprising a plurality of U-shaped flexible metallic partition elements arranged in series with the surfaces thereof adjacent the corners of the U in abutting relationship, said abutting surfaces being rigidly secured together.

5. In combination with a freezing tray, a removable partition assembly comprising a plurality of U-shaped flexible metallic partition elements arranged in series with the surfaces thereof adjacent the corners of the U in abutting relationship, and means including fused metal for rigidly securing said abutting surfaces together.

6. A partition assembly for freezing trays comprising a plurality of U-shaped flexible metallic partition elements arranged in two sets, said partition elements being disposed in series relation with a partition element of one of said sets interposed between each pair of adjacent partition elements of the other of said sets, the adjacent surfaces of said partition elements being arranged in abutting relation, and means including fused metal for rigidly securing said abutting surfaces together.

7. A partition assembly for freezing trays comprising a plurality of U-shaped flexible metallic partition elements having flattened corner surfaces at the corners of the U, said partition elements being arranged in two sets, the partition elements in each of said sets having the legs thereof extending outwardly in parallel relation and in the opposite direction with respect to the legs of the partition elements of the other of said sets, said partition elements being disposed in series relation with a partition element of one of said sets interposed between the partition elements of the other of said sets, the flattened corner surfaces of said partition elements being arranged in abutting relation and means including fused metal for securing said corner surfaces of said partition elements together.

8. A method of making a partition assembly for a freezing tray which comprises forming a plurality of duplicate U-shaped partition elements from sheet metal, arranging said partition elements in two sets with the partition elements in each of said sets having the legs thereof extending outwardly in parallel relation and in the opposite direction with respect to the legs of the partition elements of the other of said sets, a partition element of one of said sets being interposed between the partition elements of the other of said sets, and securing said partition elements together by the fusion of metal in abutting relation adjacent the corners of the U.

9. In combination with a freezing tray, a removable partition assembly comprising a plurality of U-shaped flexible metallic partition elements arranged in series with adjacent partition elements having legs extending in opposite direc-

tions and the surfaces thereof adjacent the corners of the U in abutting relationship, and means including fused metal for rigidly securing said abutting surfaces together.

10. In combination with a freezing tray, a removable partition assembly comprising a plurality of flexible metallic elements of U-shape having flattened corners arranged in series with adjacent partition elements having legs extending in opposite directions and said flattened corners in abutting relationship, and means including fused metal for rigidly securing said abutting corners together.

FRANK CONWAY.