Office de la Propriété Intellectuelle du Canada
Un organisme d'Industrie Canada

Canadian Intellectual Property Office
An agency of Industry Canada

CA 2170066 C 2007/06/12

(11)(21) 2 170 066

(12) BREVET CANADIEN
CANADIAN PATENT

(13) C

(22) Date de dépôt/Filing Date: 1996/02/22

(41) Mise à la disp. pub./Open to Public Insp.: 1996/09/07

(45) Date de délivrance/Issue Date: 2007/06/12

(30) Priorité/Priority: 1995/03/06 (US398,822)

(51) Cl.Int./Int.Cl. *G09G 3/20* (2006.01),
G09G 3/36 (2006.01)

(72) Inventeurs/Inventors:
DINGWALL, ANDREW GORDON FRANCIS, US;
WEISBROD, SHERMAN, US

(73) Propriétaire/Owner:
THOMSON CONSUMER ELECTRONICS, S.A., FR

(74) Agent: CRAIG WILSON AND COMPANY

(54) Titre : AMPLIFICATEUR A CORRECTION DE LA TENSION APPLIQUEE AUX PIXELS D'AFFICHAGE
(54) Title: AMPLIFIER WITH PIXEL VOLTAGE COMPENSATION FOR A DISPLAY

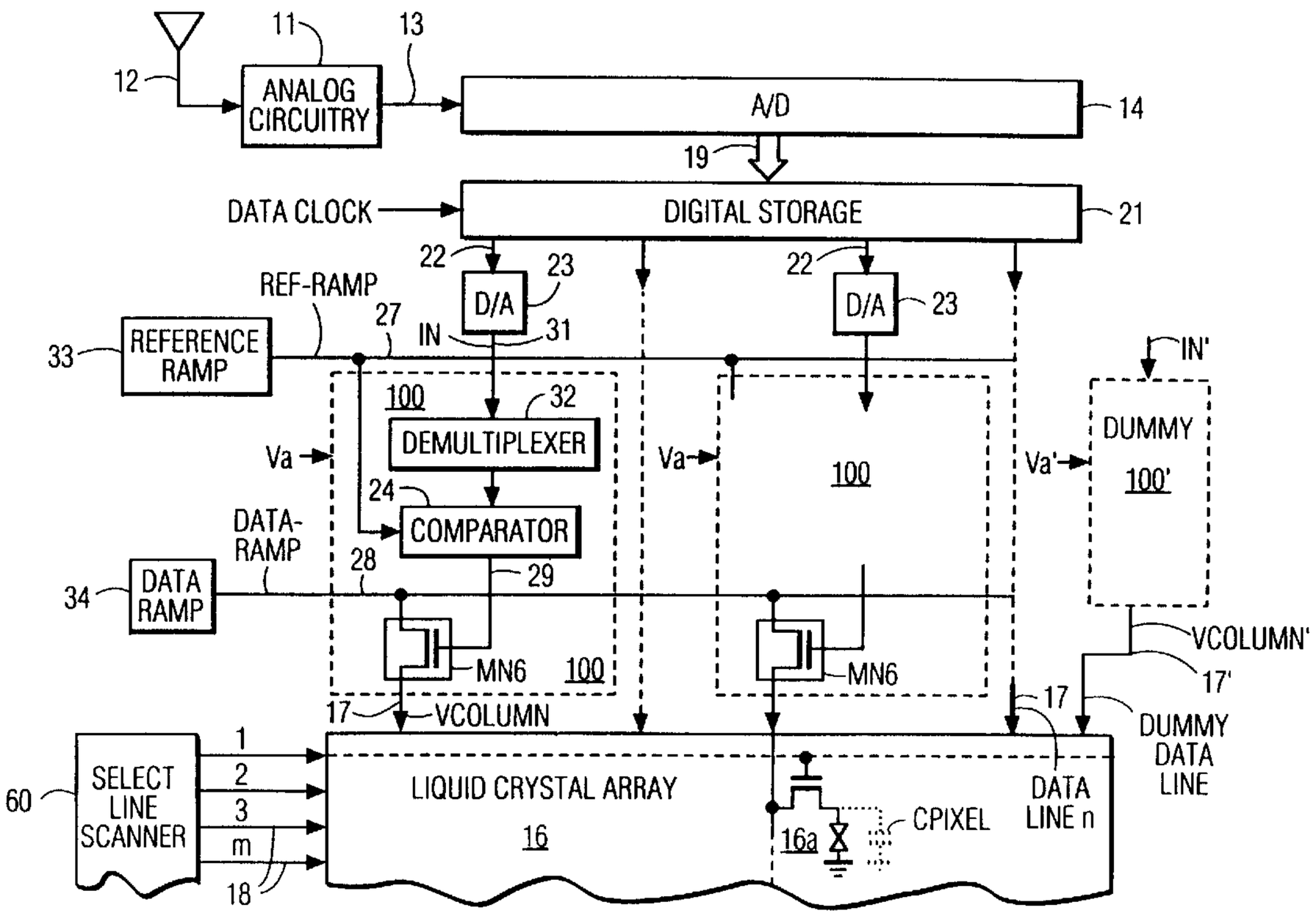

(57) Abrégé/Abstract:
A liquid crystal display includes pixels that are arranged in columns and rows. Data line drivers responsive to a video signal develop output signals in data lines that correspond with the columns, respectively. An adjustment data line driver is provided. The adjustment data line driver is responsive to a reference DC constant signal at a mid-range of the video signal. An output signal of the adjustment data line driver is coupled to the other data line drivers in a negative feedback manner to compensate for output signal variations in the other data line drivers.

ABSTRACT

A liquid crystal display includes pixels that are arranged in columns and rows. Data line drivers responsive to a video signal develop output signals in data lines that correspond with the columns, respectively. An adjustment data line driver is provided. The adjustment data line driver is responsive to a reference DC constant signal at a mid-range of the video signal. An output signal of the adjustment data line driver is coupled to the other data line drivers in a negative feedback manner to compensate for output signal variations in the other data line drivers.

AN AMPLIFIER WITH PIXEL VOLTAGE COMPENSATION FOR A DISPLAY

This invention relates generally to drive circuits for display devices and particularly to a system for applying brightness signals to pixels of a display device, such as a liquid crystal display (LCD).

Display devices, such as liquid crystal displays, are composed of a matrix or an array of pixels arranged horizontally in rows and vertically in columns. The video information to be displayed is applied as brightness (gray scale) signals to data lines which are individually associated with each column of pixels. The row of pixels are sequentially scanned and the capacitances of the pixels within the activated row are charged to the various brightness levels in accordance with the levels of the brightness signals applied to the individual columns.

In an active matrix display each pixel element includes a switching device which applies the video signal to the pixel. Typically, the switching device is a thin film transistor (TFT), which receives the brightness information from solid state circuitry. Because both the TFT's and the circuitry are composed of solid state devices it is preferable to simultaneously fabricate the TFT's and the drive circuitry utilizing either amorphous silicon or polysilicon technology.

Liquid crystal displays are composed of a liquid crystal material which is sandwiched between two substrates. At least one, and typically both of the substrates, is transparent to light and the surfaces of the substrates which are adjacent to the liquid crystal material support patterns of transparent conductive electrodes arranged in a pattern to form the individual pixel elements. It may be desirable to fabricate the drive circuitry on the substrates and around the perimeter of the display together with the TFT's.

Amorphous silicon has been the preferable technology for fabricating liquid crystal displays because this material can be fabricated at low temperatures. Low fabrication temperature is

important because it permits the use of standard, readily available and inexpensive substrate materials. However, the use of amorphous silicon thin film transistors (a-Si TFTs) in integrated peripheral pixel drivers has been limited because of, low mobility, threshold voltage drift and the availability of only N-MOS enhancement transistors.

U.S. Patent 5,170,155 in the names of Plus et al., entitled "System for Applying Brightness Signals To A Display Device And Comparator Therefore", describes a data line or column driver of an LCD. The data line driver of Plus et al., operates as a chopped ramp amplifier and utilizes TFT's. The data line driver is responsive to a picture information containing signal and generates a pixel voltage in a given column data line.

Disadvantageously, an output voltage of such data line driver may vary, for a given level of the input voltage, as a function of the operation hours of the data line driver. This is so because a gate-source voltage in, for example, an output transistor of the data line driver produces stress in such TFT. The stress in the TFT causes a threshold voltage drift and mobility degradation in such TFT of the data line driver. It is desirable to compensate for the tendency of the output voltage of the data line driver to vary as a result of the stress.

In accordance with an inventive feature, a signal that is indicative of a stress related output voltage variations of the data line driver is provided. The stress related output voltage indicative signal is coupled to the data line drivers for varying the output voltage of each of the line drivers in accordance with the stress related output voltage indicative signal in a manner to reduce the output voltage variation.

A video apparatus, embodying an aspect of the invention, for developing a signal containing picture information in pixels of a display device arranged in columns, includes a source of a video signal. A plurality of data line drivers are responsive to the video signal for applying the video signal to the pixels. A given data line driver of the plurality of line drivers is coupled to a corresponding data line associated with a

corresponding column of the pixels for developing an output signal in the data line at a magnitude that is determined by a corresponding portion of the video signal. A dummy data line driver is used for generating a control signal that is coupled to each of the plurality of the data line drivers for controlling the output signal of each of the plurality of data line drivers. For a given magnitude of the video signal portion a tendency of the output signal of the given data line driver to change over the operation lifetime is compensated by the control signal in a manner to reduce the change in the output signal of each of the data line drivers.

FIGURE 1 illustrates a block diagram of a liquid crystal display arrangement that includes demultiplexer and data line drivers, embodying an aspect of the invention;

FIGURE 2 illustrates the demultiplexer and data line driver of FIGURE 1 in more detail;

FIGURES 3a-3h illustrate waveforms useful for explaining the operation of the circuit of FIGURE 2; and

FIGURE 4 illustrates a gain compensation arrangement, embodying an inventive feature, for controlling the gain of each of the demultiplexer and data line drivers of FIGURE 1.

In FIGURE 1, that includes demultiplexer and data line drivers 100, an analog circuitry 11 receives a video signal representative of picture information to be displayed from, for example, an antenna 12. The analog circuitry 11 provides a video signal on a line 13 as an input signal to an analog-to-digital converter (A/D) 14.

The television signal from the analog circuitry 11 is to be displayed on a liquid crystal array 16 which is composed of a large number of pixel elements, such as a liquid crystal cell 16a, arranged horizontally in m = 560 rows and vertically in n = 960 columns. Liquid crystal array 16 includes n = 960 columns of data lines 17, one for each of the vertical columns of liquid crystal cells 16a, and m = 560 select lines 18, one for each of the horizontal rows of liquid crystal cells 16a.

A/D converter 14 includes an output bus bar 19 to provide brightness levels, or gray scale codes, to a memory 21 having 40 groups of output lines 22. Each group of output lines 22 of memory 21 applies the stored digital information to a corresponding digital-to-analog (D/A) converter 23. There are 40 D/A converters 23 that correspond to the 40 groups of lines 22, respectively. An output signal IN of a given D/A converter 23 is coupled via a corresponding line 31 to corresponding demultiplexer and data line driver 100 that drives corresponding data line 17. A select line scanner 60 produces row select signals in lines 18 for selecting, in a conventional manner, a given row of array 16. The voltages developed in 960 data lines 17 are applied during a 32 microsecond line time, to pixels 16a of the selected row.

A given demultiplexer and data line driver 100 uses chopped ramp amplifiers, not shown in detail in FIGURE 1, with a low input capacitance that is, for example, smaller than 1pf to store corresponding signal IN and to transfer stored input signal IN to corresponding data line 17. Each data line 17 is applied to 560 rows of pixel cells 16a that form a capacitance load of, for example, 20pf.

FIGURE 2 illustrates in detail a given one of demultiplexer and data line drivers 100. FIGURES 3a-3h illustrate waveforms useful for explaining the operation of the circuit of FIGURE 2. Similar symbols and numerals in FIGURES 1, 2 and 3a-3h indicate similar items or functions. All the transistors of demultiplexer and line driver 100 of FIGURE 2 are TFT's of the N-MOS type. Therefore, advantageously, they can be formed together with array 16 of FIGURE 1 as one integrated circuit.

Prior to sampling the video signal in signal line 31 of FIGURE 2, a voltage developed at a terminal D of a capacitor C43 is initialized. To initialize the voltage in capacitor C43, D/A converter 23 develops a predetermined voltage in line 31 such as the maximum, or full scale voltage of video signal IN. A transistor MN1 applies the initializing voltage in line 31 to capacitor C43 when a control pulse PRE-DCTRL of FIGURE 3a is developed at the

gate of transistor MN1. In this way, the voltage in capacitor C43 is the same prior to each pixel updating cycle. Following pulse PRE-DCTRL, signal IN changes to contain video information that is used for the current pixel updating cycle.

Demultiplexer transistor MN1 of a demultiplexer 32 of FIGURE 2 samples analog signal IN developed in signal line 31 that contains video information. The sampled signal is stored in sampling capacitor C43 of demultiplexer 32. The sampling of a group of 40 signals IN of FIGURE 1 developed in lines 31 occurs simultaneously under the control of a corresponding pulse signal DCTRL(i). As shown in FIGURE 3a, 24 pulse signals DCTRL(i) occur successively, during an interval following t5a-t20. Each pulse signal DCTRL(i) of FIGURE 2 controls the demultiplexing operation in a corresponding group of 40 demultiplexers 32. The entire demultiplexing operation of 960 pixels occurs in interval t5a-t20 of FIGURE 3a.

To provide an efficient time utilization, a two-stage pipeline cycle is used. Signals IN are demultiplexed and stored in 960 capacitors C43 of FIGURE 2 during interval t5a-t20, as explained before. During an interval t3-t4 of FIGURE 3d, prior to the occurrence of any of pulse PRE-DCTRL and the 24 pulse signals DCTRL of FIGURE 3a, each capacitors C43 of FIGURE 2 is coupled to a capacitor C2 via a transistor MN7 when a pulse signal DXFER of FIGURE 3d occurs. Thus, a portion of signal IN that is stored in capacitor C43 is transferred to capacitor C2 of FIGURE 2 and develops a voltage VC2. During interval t5a-t20, when pulse signals DCTRL of FIGURE 3a occur, voltage VC2 of FIGURE 2 in capacitor C2 is applied to array 16 via corresponding data line 17, as explained below. Thus, signals IN are applied to array 16 via the two-stage pipeline.

A reference ramp generator 33 provides a reference ramp signal REF-RAMP on an output conductor 27. Conductor 27 is coupled, for example, in common to a terminal E of each capacitor C2 of FIGURE 2 of each demultiplexer and data line driver 100. A terminal A of capacitor C2 forms an input terminal of a comparator 24. A data ramp generator 34 of FIGURE 1

provides a data ramp voltage DATA-RAMP via an output line 28. In demultiplexer and data line driver 100 of FIGURE 2, a transistor MN6 applies voltage DATA-RAMP to data line 17 to develop a voltage VCOLUMN. The row to which voltage VCOLUMN is applied is determined in accordance with row select signals developed in row select lines 18. A display device using a shift register for generating select signals such as developed in lines 18 is described in, for example, U.S. Patent Nos. 4,766,430 and 4,742,346. Transistor MN6 is a TFT having a gate electrode that is coupled to an output terminal C of comparator 24 by a conductor 29. An output voltage VC from the comparator 24 controls the conduction interval of transistor MN6.

In each pixel updating period, prior to applying voltage VC of comparator 24 to transistor MN6 to control the conduction interval of transistor MN6, comparator 24 is automatically calibrated or adjusted. At time t0 (FIGURE 3b) transistor MN10 is conditioned to conduct by a signal PRE-AUTOZ causing imposition of a voltage VPRAZ onto the drain electrode of a transistor MN5 and the gate electrode of transistor MN6. This voltage, designated VC, stored on stray capacitances such as, for example, a source-gate capacitance C24, shown in broken lines, of transistor MN6 causes transistor MN6 to conduct. Transistor MN5 is non-conductive when transistor MN10 pre-charges capacitance C24.

At a time t1 of FIGURE 3b, pulse signal PRE-AUTOZ terminates and transistor MN10 is turned off. At time t1, a pulse signal AUTOZERO is applied to a gate electrode of a transistor MN3 that is coupled between the gate and drain terminals of transistor MN5 to turn on transistor MN3. Simultaneously, a pulse signal AZ of FIGURE 3g is applied to a gate electrode of a transistor MN2 to turn on transistor MN2. When transistor MN2 is turned on, a voltage Va is coupled through transistor MN2 to terminal A of a coupling capacitor C1. Transistor MN2 develops a voltage VAA at terminal A at a level of voltage Va for establishing a triggering level of comparator 24 at terminal A. The triggering level of comparator 24 is equal to voltage Va. A second terminal B of

capacitor C1 is coupled to transistor MN3 and the gate of transistor MN5.

Conductive transistor MN3 equilabrates the charge at terminal C, between the gate and drain electrodes of transistor MN5, and develops a gate voltage VG on the gate electrode of transistor MN5 at terminal B. Initially, voltage VG exceeds a threshold level VTH of transistor MN5 and causes transistor MN5 to conduct. The conduction of transistor MN5 causes the voltages at each of terminals B and C to decrease until each becomes equal to the threshold level VTH of transistor MN5, during the pulse of signal AUTOZERO. Gate electrode voltage VG of transistor MN5 at terminal B is at its threshold level VTH when voltage VAA at terminal A is equal to voltage Va. At time t2 of FIGURES 3c and 3f, transistors MN3 and MN2 of FIGURE 2 are turned off and comparator 24 is calibrated or adjusted. Therefore, the triggering level of comparator 24 of FIGURE 2 with respect to input terminal A is equal to voltage Va.

As explained above, pulse signal DXFER developed, beginning at time t3, at the gate of transistor MN7 couples capacitor C43 of demultiplexer 32 to capacitor C2 via terminal A. Consequently, voltage VC2 that is developed in capacitor C2 is proportional to the level of sampled signal IN in capacitor C43. The magnitude of signal IN is such that voltage VAA developed at terminal A, during pulse signal DXFER, is smaller than triggering level Va of comparator 24. Therefore, comparator transistor MN5 remains non-conductive immediately after time t3. A voltage difference between voltage VAA and the triggering level of comparator 24 that is equal to voltage Va is determined by the magnitude of signal IN.

When voltage VAA at terminal A exceeds voltage Va, transistor MN5 becomes conductive. On the other hand, when voltage VAA at terminal A does not exceed voltage Va, transistor MN5 is nonconductive. The automatic calibration or adjustment of comparator 24 compensates for threshold voltage drift, for example, in transistor MN5.

A pulse RESET of FIGURE 2 has a waveform and timing similar to that of pulse signal AUTOZERO of FIGURE 3c. Pulse voltage RESET is coupled to the gate electrode of a transistor MN9, that is coupled in parallel with transistor MN6, to turn on transistor MN9. When transistor MN9 is conductive, it establishes a predetermined initial condition of voltage VCOLUMN on line 17 and in pixel cell 16a of FIGURE 1 of the selected row. Advantageously, establishing the initial condition in pixel cell 16a prevents previous stored picture information contained in the capacitance of pixel cell 16a from affecting pixel voltage VCOLUMN at the current update period of FIGURES 3b-3g.

Transistor MN9 establishes voltage VCOLUMN at an inactive level VIAD of signal DATA-RAMP, prior to time t6. A capacitance C4 associated with the data line 17 has been partially charged/discharged toward inactive level VIAD of signal DATA-RAMP, during interval t0-t1, immediately after transistor MN10 has been turned on. During pulse signal AUTOZERO, gate voltage VC of transistor MN6 is reduced to the threshold voltage of transistor MN5. Therefore, transistor MN6 is substantially turned off. The charge/discharge of capacitance C4 is performed predominantly during interval t1-t2, when transistor MN9 is turned on. Advantageously, utilizing transistor MN9, and transistor MN6, for establishing the initial conditions of voltage VCOLUMN, reduces a threshold voltage drift of transistor MN6. The threshold voltage drift of transistor MN6 is reduced because transistor MN6 is driven for a shorter period than if it had to establish, alone, the initial condition of voltage VCOLUMN.

Transistor MN6 is designed to have similar parameters and stress and, therefore, a similar threshold voltage drift as transistor MN5. Therefore, advantageously, the threshold voltage drift of transistor MN6 tracks the threshold voltage drift of transistor MN5.

In one of two modes of operations that are discussed below, source voltage Vss of transistor MN5 is equal to 0V. Also voltage VCOLUMN, during interval t2-t4, that is equal to inactive level VIAD of signal DATA-RAMP, is equal to 1V. Drain voltage

VC of transistor MN5 at terminal C, prior to time t5, is equal to threshold voltage VTH of transistor MN5. Because of the aforementioned tracking, variation of threshold voltage VTH of transistor MN5 maintains the gate-source voltage of transistor MN6 at a level that is 1V less than the threshold voltage of transistor MN6. The 1V difference occurs because there is a potential difference of one volt between the source electrodes of transistors MN5 and MN6.

Advantageously, a pulse voltage C-BOOT of FIGURE 3h is capacitively coupled via a capacitor C5 of FIGURE 2 to terminal C, at the gate of transistor MN6. Capacitor C5 and capacitance C24 form a voltage divider. The magnitude of voltage C-BOOT is selected so that gate voltage VC increases with respect to the level developed, during pulse AUTOZERO, by a predetermined small amount sufficient to maintain transistor MN6 conductive. As explained before, transistor MN5 is nonconductive following time t3 of FIGURE 3d. Thus, the predetermined increase in voltage VC that is in the order of 5V is determined by the capacitance voltage divider that is formed with respect to voltage BOOT-C at terminal C. The increase in voltage VC is independent on threshold voltage VTH. Therefore, threshold voltage drift of transistor MN5 or MN6 over the operational life, does not affect the increase by voltage C-BOOT. It follows that, over the operational life when voltage VTH may significantly increase, transistor MN6 is maintained conductive with small drive prior to time t6 of FIGURE 3f.

Any threshold voltage drift of voltage VTH of transistor MN5 will cause the same change in voltage VC at terminal C. Assume that the threshold voltage of transistor MN6 tracks that of transistor MN5. Therefore, voltage C-BOOT need not compensate for threshold voltage drift of transistor MN6. It follows that transistor MN6 will be turned on by voltage C-BOOT irrespective of any threshold voltage drift of transistor MN5 and MN6. Thus, the threshold voltage variation of transistor MN5 compensates that of transistor MN6.

The capacitance coupling of voltage C-BOOT enables using gate voltage VC of transistor MN6 at terminal C at a level

that is only slightly greater than the threshold voltage of transistor MN6 such as by 5V over the threshold voltage of transistor MN6. Therefore, transistor MN6 is not significantly stressed. By avoiding significant drive voltages to the gate electrode of transistor MN6, advantageously, threshold voltage drift in transistor MN6 that may occur over its operational life is substantially smaller than if transistor MN6 were driven with a large drive voltage.

Voltage C-BOOT is developed in a ramping manner during interval t5-t7 of FIGURE 3h. The relatively slow rise time of voltage C-BOOT helps reduce the stress on transistor MN6. Having the gate voltage of transistor MN6 increase slowly allows the source of transistor MN6 to charge such that the gate-source potential difference remains smaller for larger periods. Interval t5-t7 has a length of 4μsec. By maintaining the length of interval t5-t7 longer than 2μsec, or approximately 20% of the length of interval t6-t8 of signal DATA-RAMP of FIGURE 2f, the voltage difference between the gate and the source voltage in transistor MN6 is, advantageously, reduced for a significantly large period. Therefore, stress is reduced in TFT MN6.

At time t4 of FIGURE 3e, reference ramp signal REF-RAMP begins up-ramping. Signal REF-RAMP is coupled to terminal E of capacitor C2 of FIGURE 2 that is remote from input terminal A of comparator 24. As a result, voltage VAA at input terminal A of comparator 24 is equal to a sum voltage of ramping signal REF-RAMP and voltage VC2 developed in capacitor C2.

Following time t6, data ramp voltage DATA-RAMP coupled to the drain electrode of transistor MN6 begins upramping. With feedback coupling to terminal C from the stray gate-source and gate-drain capacitance of transistor MN6, the voltage at terminal C will be sufficient to condition transistor MN6 to conduct for all values of the data ramp signal DATA-RAMP. Following time t4, and as long as ramping voltage VAA at terminal A has not reached the triggering level that is equal to voltage Va of comparator 24, transistor MN5 remains non-conductive and transistor MN6 remains conductive. As long as transistor MN6 is

conductive, upramping voltage DATA-RAMP is coupled through transistor MN6 to column data line 17 for increasing the potential VCOLUMN of data line 17 and, therefore, the potential applied to pixel capacitance CPIXEL of the selected row. The capacitive feedback of ramp voltage VCOLUMN via, for example, capacitance 24, sustains transistor MN6 in conduction, as long as transistor MN5 exhibits a high impedance at terminal C, as indicated before.

During an upramping portion 500 of signal REF-RAMP of FIGURE 3e, sum voltage VAA at terminal A exceeds triggering level Va of comparator 24, transistor MN5 becomes conductive. The instant, during portion 500, when transistor MN5 becomes conductive varies as a function of the magnitude of signal IN.

When transistor MN5 becomes conductive, gate voltage VC of transistor MN6 decreases and causes transistor MN6 to turn off. As a result, the last value of voltage DATA-RAMP that occurs prior to the turn-off of transistor MN6 is held unchanged or stored in pixel capacitance CPIXEL until the next updating cycle. In this way, the current updating cycle is completed.

In order to prevent polarization of liquid crystal array 16 of FIGURE 1, a so-called backplane or common plane of the array, not shown, is maintained at a constant voltage VBACKPLANE. Multiplexer and data line driver 100 produces, in one updating cycle, voltage VCOLUMN that is at one polarity with respect to voltage VBACKPLANE and at the opposite polarity and the same magnitude, in an alternate updating cycle. To attain the alternate polarities, voltage DATA-RAMP is generated in the range of 1V-8.8V in one updating cycle and in the range of 9V-16.8V in the alternate update cycle. Whereas, voltage VBACKPLANE is established at an intermediate level between the two ranges. Because of the need to generate voltage DATA-RAMP in two different voltage ranges, signals or voltages AUTOZERO, PRE-AUTOZ, Vss and RESET have two different peak levels that change in alternate updating cycles in accordance with the established range of voltage DATA-RAMP.

FIGURE 4 illustrates an output voltage compensation circuit 300, embodying an aspect of the invention. Similar

symbols and numerals in FIGURES 1, 2, 3a-3h and 4 indicate similar items or functions. Circuit 300 of FIGURE 4 includes an adjustment or a dummy demultiplexer and data line driver 100' that is similar to demultiplexer and data line driver 100 of FIGURES 1 and 2, with the difference noted below. Circuit 300 of FIGURE 4 compensates for, for example, stress related change in voltage VCOLUMN of FIGURE 1. The change in voltage VCOLUMN may result from, for example, a change in the threshold voltage of transistor MN6.

Dummy demultiplexer and data line driver 100' of FIGURE 4 drives a dummy data line 17' in array 16 of FIGURE 1. Data line 17' is provided for output voltage compensation purposes and not for display purposes. Therefore, pixels 16a, not shown, of array 16 that are controlled by data line 17' need not produce an image that is visible to the user.

The voltage range of video signal IN of demultiplexer and data line driver 100 is between 0V and 10V. An input signal IN' of demultiplexer and data line driver 100' of FIGURES 1 and 4 is selected to be a constant DC level such as 5V that is approximately at a mid-range of video signal IN of FIGURE 1. As a result, an output voltage VCOLUMN' of dummy demultiplexer and data line driver 100' of FIGURE 4 is approximately at a mid-range of voltage VCOLUMN of FIGURE 1.

Voltage VCOLUMN' of demultiplexer and data line driver 100' of FIGURE 4 is coupled via a conventional transmission gate that is formed by a pair of transistors MN and MP to a sampling capacitor C1. Gate terminals of transistors MN and MP are controlled by complementary signals SAMP and SAMP', respectively, that occur at a time t10 of FIGURE 3f. Thus, a sampled voltage VC1 in capacitor C1 of FIGURE 4 is indicative of a magnitude of voltage VCOLUMN of each demultiplexer and data line driver 100 of FIGURE 1 in the mid-range of signal IN. It is assumed that a stress related change in voltage VCOLUMN is approximately the same as in voltage VCOLUMN' of FIGURE 4.

Voltage VC1 is coupled via a unity gain non-inverting amplifier 301 to an inverting amplifier 304. A resistor R3 couples

amplifier 301 to an inverting input terminal 305 of an operational amplifier 302. Amplifier 302 is included in inverting, closed loop amplifier 304 having approximately unity gain. An output terminal 303 of amplifier 302 is coupled via a feedback resistor R4 to terminal 305. A reference voltage REF is coupled to a non-inverting input terminal 306 of amplifier 302 via a voltage divider that is formed by a resistor R1 and a resistor R2. Consequently, a voltage VREF is developed at terminal 306 that establishes a level of voltage Va at output terminal 303 of amplifier 302.

Amplifier 304 operates as an inverting amplifier. Amplifier 304 generates voltage Va that is coupled to comparator 24 of each demultiplexer and data line driver 100 of FIGURE 1. On the other hand, a voltage Va' of demultiplexer and data line driver 100' that controls the triggering level of the component does not vary when voltage VCOLUMN' varies. Thus, voltage Va establishes the triggering level of comparator 24 of FIGURE 2 in each demultiplexer and data line driver 100 of FIGURE 1 but does not affect that of demultiplexer and data line driver 100'.

Voltage VREF produces a predetermined magnitude of voltage Va in the beginning of the operation lifetime of demultiplexer and data line drivers 100 and 100' of FIGURE 1. Demultiplexer and data line driver 100 produces a corresponding magnitude of voltage VCOLUMN for a given magnitude of signal IN, at the beginning of the operation lifetime. As a result of stress, for example, after a period of operational lifetime of demultiplexer and data line driver 100 has occurred, a degradation may occur. The degradation may occur in the TFT's of demultiplexer and data line drivers 100 and 100' of FIGURE 1, for example, in transistor MN6 of FIGURE 2.

Assume that such degradation tends to produce a voltage change ΔV in voltage VCOLUMN' of FIGURE 4 relative to the magnitude of voltage VCOLUMN' that is produced at the beginning of the operation lifetime. Consequently, voltage Va will change by the same amount of voltage change ΔV but in the opposite direction.

In accordance with an inventive feature, voltage change ΔV in voltage Va causes approximately the same compensating voltage change ΔV in voltage VCOLUMN of each demultiplexer and data line driver 100 of FIGURE 1 but in the opposite direction. The change in voltage Va compensates for the change in the threshold voltage of transistor MN6 such that each voltage VCOLUMN remains substantially unaffected by the change in the threshold voltage of transistor MN6 during the extended operational life. In this way, the pixel brightness and color is not degraded despite the change in the threshold voltage of transistor MN6. Thus, advantageously, manual adjustment is not required during the operational lifetime.

The change in voltage Va provides close to an ideal compensation when signal IN is in the mid-range of signal IN of FIGURE 2. At all other levels of signal IN, circuit 300 of FIGURE 4 produces approximately the same voltage change ΔV of voltage Va as in the mid-range. Thus, circuit 300 of FIGURE 4 produces an offset voltage change of comparator 24 of FIGURE 2. Producing the same offset voltage change is provided because the threshold change of transistor MN6 tends to cause the same change in voltage VCOLUMN for any level of signal IN. Thus, applying the same magnitude of voltage change ΔV and in the opposite direction to voltage Va maintains voltage VCOLUMN uniform over the operation lifetime.

That portion of circuit 300 of FIGURE 4 that includes transistors MP and MN and amplifiers 301 and 302 may be formed outside the glass of the LCD. Therefore, it may be fabricated with conventional transistors that are not subject to threshold voltage drift and to stress. Whereas, demultiplexer and data line driver 100' may be formed on the glass of the LCD.

RCA 87,876

WHAT IS CLAIMED IS:

1. A video apparatus for developing a signal containing picture information in pixels of a display device arranged in columns, comprising:

a source of a video signal;

a plurality of data line drivers responsive to said video signal for applying said video signal to said pixels, a given data line driver of said plurality of line drivers being coupled to a corresponding data line associated with a corresponding column of said pixels for developing an output signal in said data line at a magnitude determined by a corresponding portion of said video signal;

a dummy data line; and

a dummy data line driver coupled to the dummy data line for generating a control signal that is coupled to each of said plurality of said data line drivers for controlling said output signal of each of said plurality of data line drivers such that for a given magnitude of said video signal portion a tendency of said output signal of said given data line driver to change over the operation lifetime is compensated by said control signal in a manner to reduce said change in said output signal of each of said data line drivers.

2. An apparatus according to Claim 1 wherein said dummy data line driver is responsive to an input signal at a constant reference level.

3. An apparatus according to Claim 2 wherein said reference level is selected to be approximately at a mid-range of said video signal.

4. An apparatus according to Claim 1 wherein each of said plurality of data line drivers includes a comparator and wherein said control signal varies a triggering level of said comparator.

5. An apparatus according to Claim 4 wherein said dummy data line driver includes a comparator having a triggering level that is unaffected by said control signal.

6. An apparatus according to Claim 5 wherein said triggering level of said comparator varies independently of said video signal.

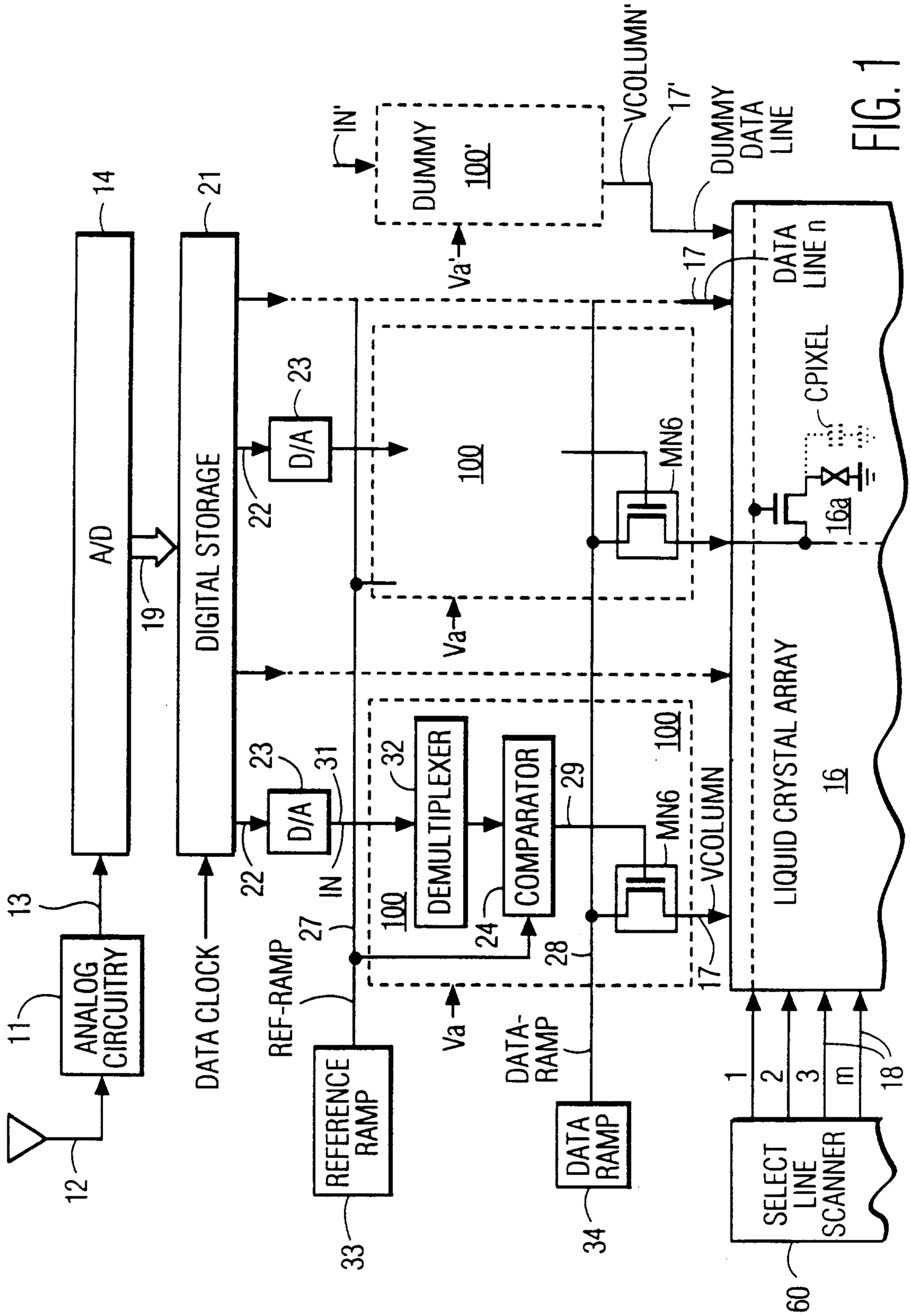

FIG. 1

Craig Wilson and Company

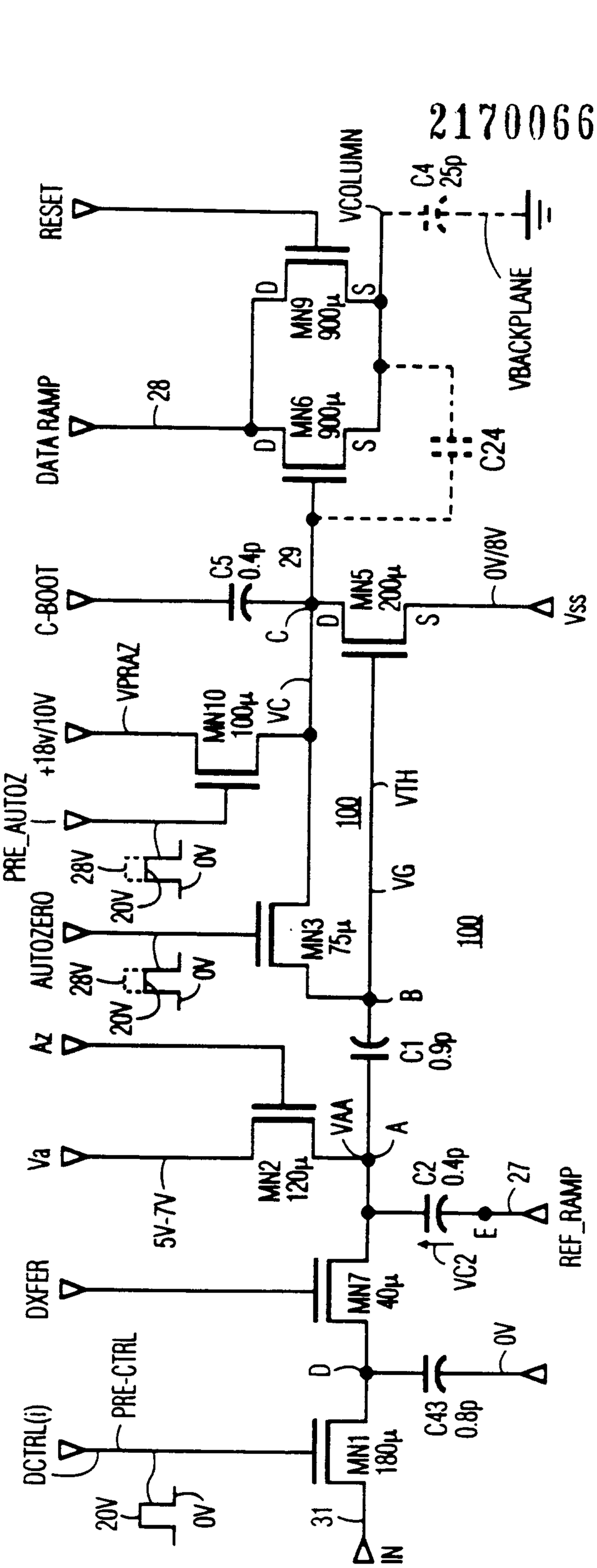

FIG. 2

Craig Wilson and Company

FIG. 3a

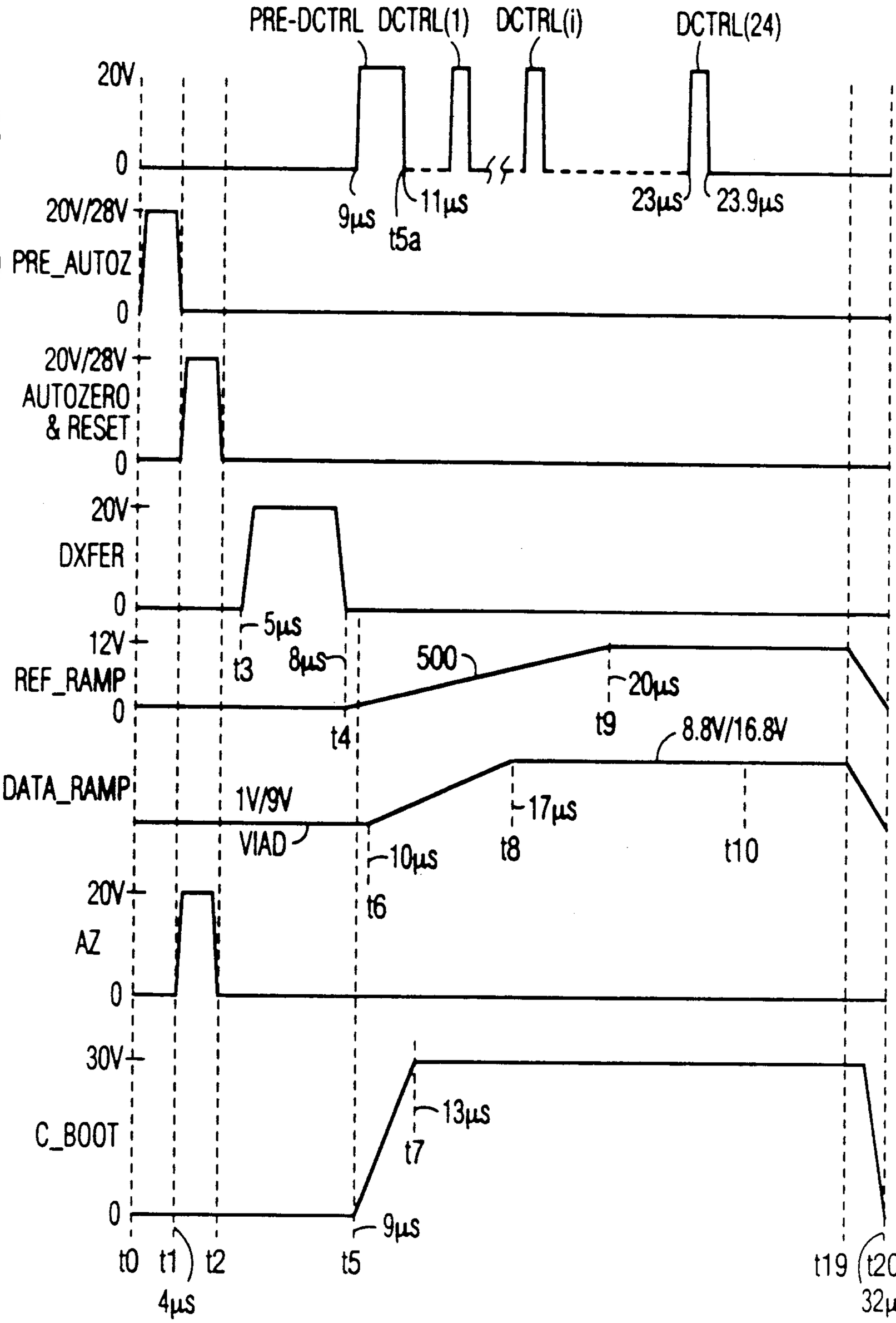

FIG. 3b

FIG. 3c

FIG. 3d

FIG. 3e

FIG. 3f

FIG. 3g

FIG. 3h

Craig Wilson and Company

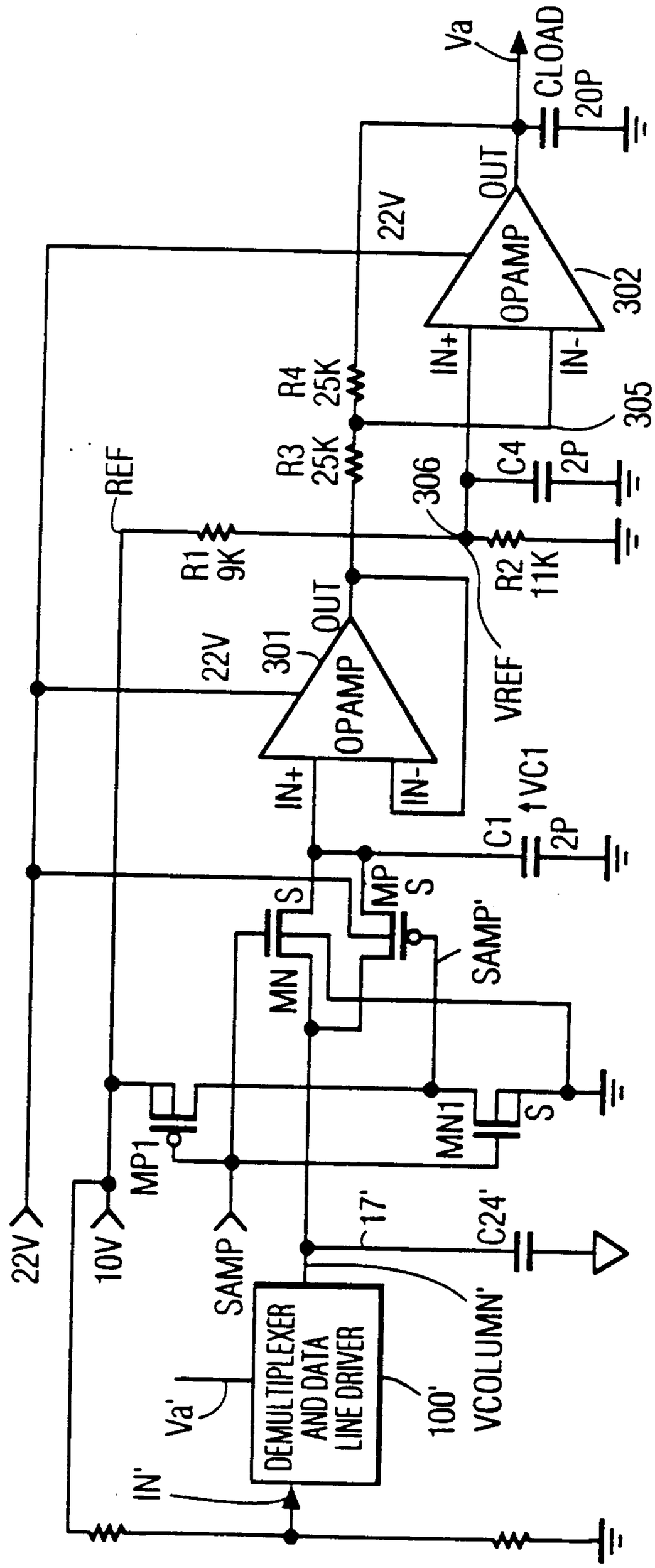
Va
CLOAD
20P
22V
OUT
OPAMP
302
IN+
IN-
R4
25K
R3
25K
305
REF
306
C4
2P
R1
9K
R2
11K
22V
301
OUT
OPAMP
IN+
IN-
VREF
C1
2P
VC1
MP
S
SAMP'
MN
MN1
S
S
MP1
22V
10V
SAMP
17'
C24'
DEMULTIPLEXER
AND DATA
LINE DRIVER
Va'
IN'
100'
VCOLUMN'

FIG. 4

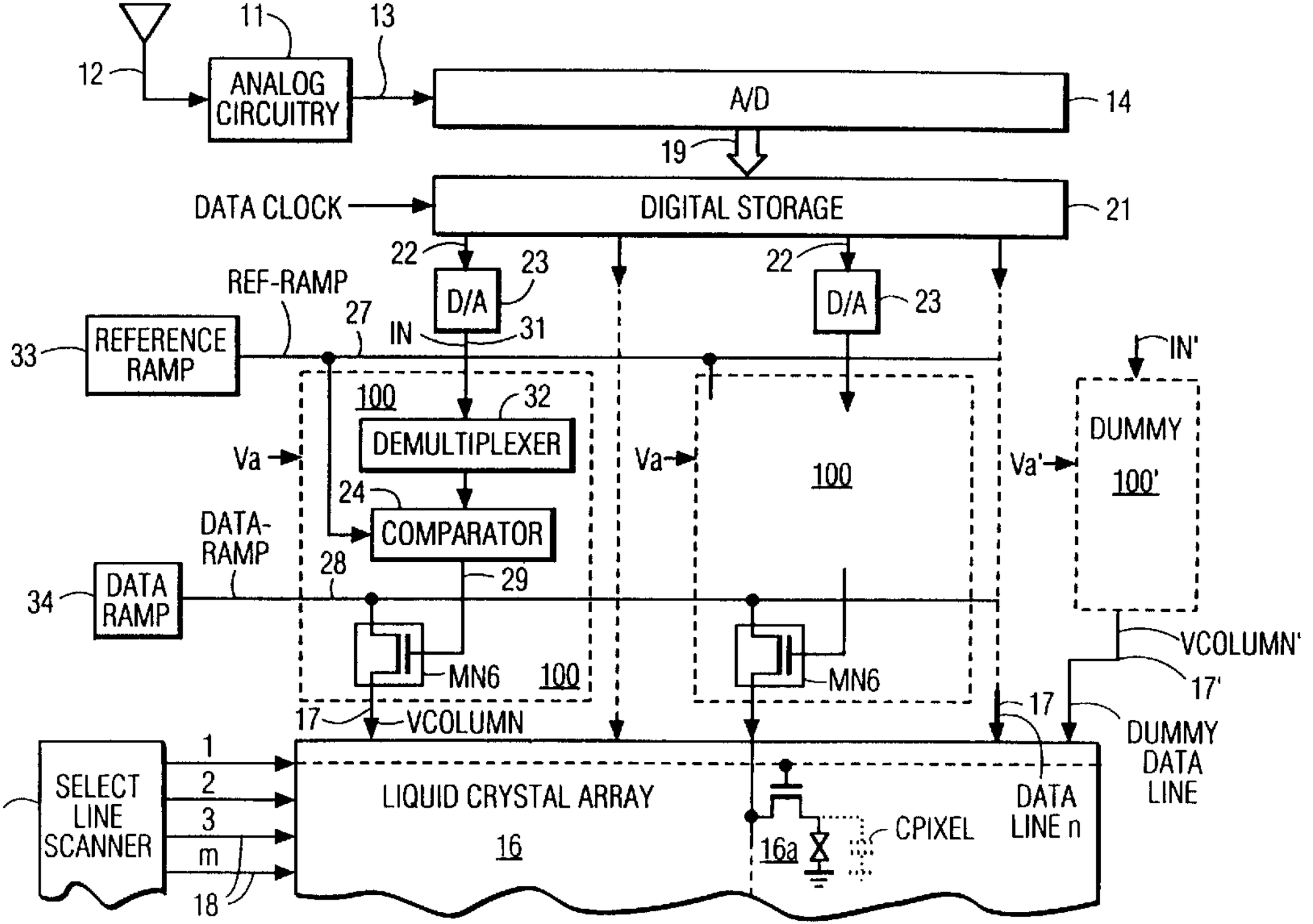
11
13
12
ANALOG CIRCUITRY
A/D
14
19
DATA CLOCK
DIGITAL STORAGE
21
22
23
D/A
22
D/A
23
REF-RAMP
27
IN
31
33
REFERENCE RAMP
IN'
100
32
DEMULTIPLEXER
DUMMY
Va
Va
Va'
100
100'
24
COMPARATOR
DATA-RAMP
28
29
34
DATA RAMP
MN6
100
MN6
VCOLUMN'
17'
17
VCOLUMN
17
DUMMY DATA LINE
1
2
3
m
SELECT LINE SCANNER
60
LIQUID CRYSTAL ARRAY
16
DATA LINE n
CPIXEL
16a
18