June 4, 1929. K. WARMUTH 1,715,878

PASTE DISCHARGER

Filed May 9, 1928

Fig. 2.

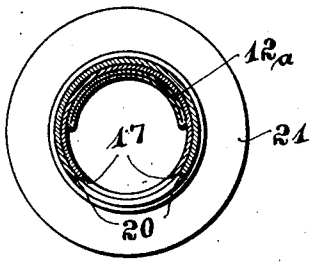

Fig. 1.

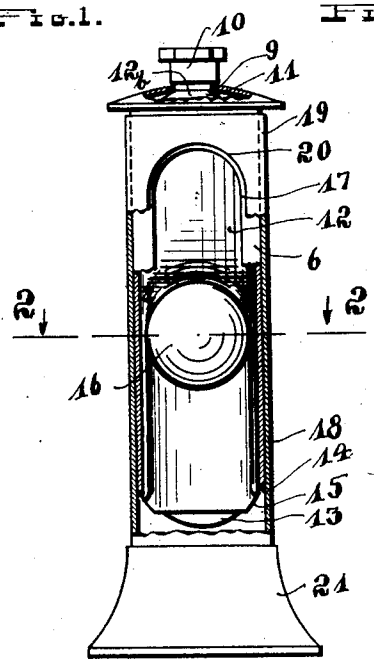

Fig. 3.

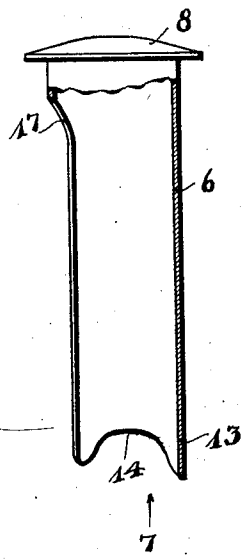

Fig. 4.

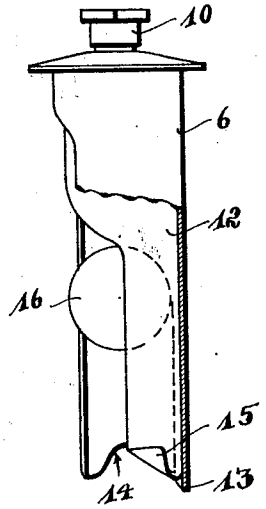

Fig. 5.

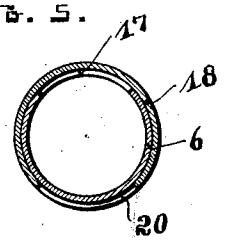

INVENTOR:

KASPAR WARMUTH,

By: Otto H. Kruger.

his Atty.

Patented June 4, 1929. 1,715,878

UNITED STATES PATENT OFFICE.

KASPAR WARMUTH, OF SAN FERNANDO, CALIFORNIA.

PASTE DISCHARGER.

Application filed May 9, 1928. Serial No. 276,307.

This invention relates to devices used for discharging matter from tubes, more particularly for discharging shaving-cream and similar matter from thin collapsible tubes.

One of the objects of this invention is to facilitate a discharging of paste-like matter from tubes made of thin collapsible material.

Another object is to provide a holder for such tubes designed to allow the application of a finger to the sides of the inserted tube, whereby the paste-like matter may be forced out of the tube.

Another object is to provide a holder of approximately a size to firmly hold an inserted tube over its sides, so as to prevent a breaking or bursting of the tube when pressed upon.

Another object is to provide a holder into which a ball may be inserted together with a tube, whereby matter may be discharged from the tube by a rolling of the ball within the holder against the inserted tube.

Another object is to provide a holder designed so that the corners of the rear-end of the tube may be engaged over the edges of the holder to firmly hold the tube within the holder.

Another object is to provide a casing for the holder, holder and casing having elongated openings adapted to be turned so that an inserted tube may be reached through the aligned openings for discharging purposes and so that the holder may be turned within the casing in order to fully inclose an inserted tube when the openings are turned out of aligning position.

Other objects will appear from the following description and appended claims as well as from the accompanying drawing, in which—

Fig. 1 is a front elevation partly in section, illustrating a simple casing and holder with an inserted tube and a ball by which the tube can be collapsed for discharging matter from the tube according to this invention.

Fig. 2 is a cross-section on line 2—2 of Fig. 1.

Fig. 3 is a fragmentary detail side elevation of the holder partly in section to illustrate the peculiar design of one end of the holder, whereby the corners or free end of an inserted tube may be engaged against longitudinal shifting.

Fig. 4 is a fragmentary detail side elevation of the holder partly in section and an inserted tube partly emptied with a ball in proper discharging position within the depressed portion of the partly emptied tube within the holder, illustrating also the corners of the free ends of the inserted tube bent over the end of the holder.

Fig. 5 is a fragmentary detail cross-section through the casing and holder, in which the holder is turned within the casing so that the operating openings are out of alignment in which case an inclosed tube may be fully protected.

Paste-like matter, such as shaving-cream, or tooth-paste, or vaseline-petroleum-jelly and similar matter, is nowadays commonly handled on the market in tubes made of thin collapsible material.

Such tubes are liable to break or burst when handled between fingers.

On the other hand, some matter dispensed or handled in such tubes is apt to become hardened and in some cases actually is from the beginning comparatively hard to be forced out of such a tube by the mere pressure of fingers over the sides of the tube, especially if one tries to discharge matter from a full tube holding such comparatively hard matter by beginning to squeeze from the end or from a disadvantageous point of the tube.

By providing a holder of a size to comparatively fit snugly over the size of a tube, the tube is naturally reinforced thereby, and by providing means whereby matter can then be forced out of the tube through the holder, a more satisfactory discharging can be assured.

Though all sorts of matter is dispensed and handled in tubes to which this invention may be applied, for the sake of simplicity, I will hereafter use "paste-tube" with reference to any tubes to handle any matter with the understanding that I do not limit myself to the handling of a certain type of tubes and any certain kind of matter, inasmuch as the housing and casing are also necessarily of somewhat tubular form which should not be misinterpreted.

As illustrated in the drawing, a holder 6 is provided into which a paste-tube may be inserted from one end.

The holder 6 is therefore of somewhat tubular form open at one end as indicated at 7 and partly closed at the opposite end as indicated at 8. The partly closed end 8 is provided with an opening 9 through which the discharging spout 10 of the paste-tube may be inserted. The discharging end of the paste-

tube 11 then rests against the partly closed end 8 of the holder. The holder is preferably designed to snugly inclose the inserted paste-tube over its sides as clearly illustrated and indicated at 12 in Figs. 1 and 4.

To this engagement of an inserted paste-tube by the partly closed end and the snugly fitting sides is added a holding on the opposite end in the manner illustrated in Fig. 4. The holder is for this purpose designed on this end 13 with cut-outs 14 over which the corners 15 of the paste-tube may be bent or folded so as to hold the inserted paste-tube against lengthwise shifting at this end.

A ball 16 is illustrated in Figs. 1 and 4 by which matter may be forced out of the inserted paste-tube by a mere rolling of the ball 16 towards the partly closed end 8 of the holder. This ball may be made of soft rubber or any other material. Soft rubber has the advantage that it may adapt itself to any unevenness that may be left in the emptied paste-tube and still apply an even pressure towards all sides against the paste-tube. On the other hand, such a pliable ball tends to hold itself within the holder near the point to which the inserted paste-tube has been emptied, so as to be always ready in a position to be used again against the still full portion of the paste-tube. Particularly is this of advantage where the holder is designed to stand in an upright position, in which case a ball might otherwise drop into the bottom of a holder when not used.

The holder is provided with an elongated opening 17 in one side through which the ball may be reached.

At the same time it must be understood that a paste-tube may be emptied by merely inserting a finger through this elongated slot 17 of the holder to press against the inserted paste-tube without the use of a ball.

For more completely incasing an inserted paste-tube, a casing 18 is also illustrated in the drawing that is not absolutely necessary.

Adding this casing, on one hand, may mean an additional expense and for this reason it may be a matter of price difference to be left to the desires of the buying public. However, the advantageous features added by this housing include additional structural points. In the first place, this housing 18 extends with its upper end 19 to a point above the opening 17 in the holder. The housing 18 is therefore provided with a similar opening 20, so that the holder may be turned to bring the opening 17 of the holder approximately into alignment with the opening 20 of the housing in order to facilitate a discharging of the inserted tube through these two aligned openings.

In cases where it is desired, the lower end of the housing is provided with a base 21 by which the whole device may be maintained in a standing upright position.

The holder may be turned within the housing to bring the opening 17 of the holder away from aligning position in relation to the opening 20 in the housing 18 in the manner illustrated in Fig. 5. In this manner, an inserted paste-tube is fully protected within the whole device so that it may be placed in a suit-case or other places without fear of getting any paste, or cream, or other matter on clothes or other articles that are placed near it.

Having thus described my invention, I claim:

1. In a device of the class described for emptying a paste-tube or the like container, a holder open at one end and partly closed at the opposite end and having an elongated opening in one side adapted to allow an insertion of the container through the open end of the holder with the discharging end of the container projecting through the partly closed end of the holder, a ball inserted into the holder in a position to be reached through the elongated opening in the side of the holder for rolling and forcing out matter from the container through the partly closed end of the holder, and a housing for movably engaging the holder having an elongated opening in its side adapted to come into alignment with the opening in the holder for discharging purposes and adapted to facilitate a complete inclosing of the inserted container when the opening in the housing is turned away from alignment with the opening in the holder.

2. In a device of the class described for emptying a paste-tube or the like container, a holder open at one end and partly closed at the opposite end and having an elongated opening in one side adapted to allow an insertion of the container through the open end of the holder with the discharging end of the container projecting through the partly closed end of the holder, a ball inserted into the holder in a position to be reached through the elongated opening in the side of the holder for rolling and forcing out matter from the container through the partly closed end of the holder, a housing for movably engaging the holder having an elongated opening in its side adapted to come into alignment with the opening in the holder for discharging purposes and adapted to facilitate a complete inclosing of the inserted container when the opening in the housing is turned away from alignment with the opening in the holder, and a base for supporting the housing in an upright position.

In testimony that I claim the foregoing as my invention I have signed my name.

KASPAR WARMUTH.