US00D415367S

United States Patent [19]

Smith

[11] Patent Number: Des. 415,367

[45] Date of Patent: ** Oct. 19, 1999

[54] **DRAWER AND RACK FOR CASSETTE CABINET**

[75] Inventor: **Richard Smith**, Torrance, Calif.

[73] Assignee: **A.L.S. Industries, Inc.**, Torrance, Calif.

[**] Term: **14 Years**

[21] Appl. No.: **29/085,996**

[22] Filed: **Apr. 2, 1998**

[51] **LOC (6) Cl.** **06-07**

[52] **U.S. Cl.** **D6/407**; D6/511

[58] **Field of Search** D6/407, 627–632, D6/466–468, 475, 476; 211/40, 41.12; 206/307, 307.1, 308.1, 387.1, 387.15; 312/9.1, 9.41, 9.47–9.56, 330.1

[56] **References Cited**

U.S. PATENT DOCUMENTS

D. 252,423	7/1979	Bokor .	
D. 252,424	7/1979	Bokor .	
D. 287,907	1/1987	Yu .	
D. 298,287	11/1988	Stravitz .	
D. 306,935	4/1990	Kirchner et al. .	
D. 307,680	5/1990	Ashkenazi .	
D. 317,079	5/1991	Schmidt et al. .	
D. 318,369	7/1991	Gilman .	
D. 321,279	11/1991	Mark .	
D. 321,802	11/1991	Smith .	
D. 327,183	6/1992	Meyer .	
D. 332,187	1/1993	Stravitz .	
D. 332,708	1/1993	Schmidt et al. .	
D. 337,451	7/1993	Mattikow .	
D. 338,572	8/1993	Mattikow .	
D. 338,573	8/1993	Mattikow .	
D. 338,786	8/1993	Mattikow .	
D. 341,268	11/1993	Osborne .	
D. 354,877	1/1995	Davis et al. .	
D. 356,921	4/1995	Wolff	D6/629
D. 357,843	5/1995	Real et al. .	
D. 358,524	5/1995	Sedon et al. .	
D. 358,526	5/1995	Sedon et al. .	
D. 364,989	12/1995	Lin .	
3,604,556	9/1971	Schwartz .	
3,613,871	10/1971	Evans .	
3,627,113	12/1971	Diioia .	
3,640,379	2/1972	Weingarden .	
3,642,337	2/1972	Manheim .	
3,677,396	7/1972	Staar .	
3,743,081	7/1973	Roberg et al. .	
3,743,374	7/1973	Glass .	
3,754,639	8/1973	Gellert .	
3,756,383	9/1973	Kryter .	
3,763,994	10/1973	Somers .	
3,777,881	12/1973	Schwartz .	
4,960,205	10/1990	Wang	206/387
5,558,235	9/1996	Hunt	211/40

Primary Examiner—Doris V. Coles
Assistant Examiner—Linda Brooks
Attorney, Agent, or Firm—Marshall A. Lerner, Esq.; Bradford E. Mattes, Esq.; Kleinberg & Lerner, LLP

[57] **CLAIM**

The ornamental design for a drawer and rack for cassette cabinet, as shown and described.

DESCRIPTION

FIG. **1** is a perspective view of a drawer and rack for cassette cabinet showing my new design;

FIG. **2** is a left side elevational view, the opposite side being a mirror image thereof;

FIG. **3** is a top plan view thereof;

FIG. **4** is a front elevational view thereof;

FIG. **5** is a bottom plan view thereof; and,

FIG. **6** is a rear elevational view thereof.

The broken line feature is for illustrative purposes only and forms no part of the claimed design.

1 Claim, 3 Drawing Sheets

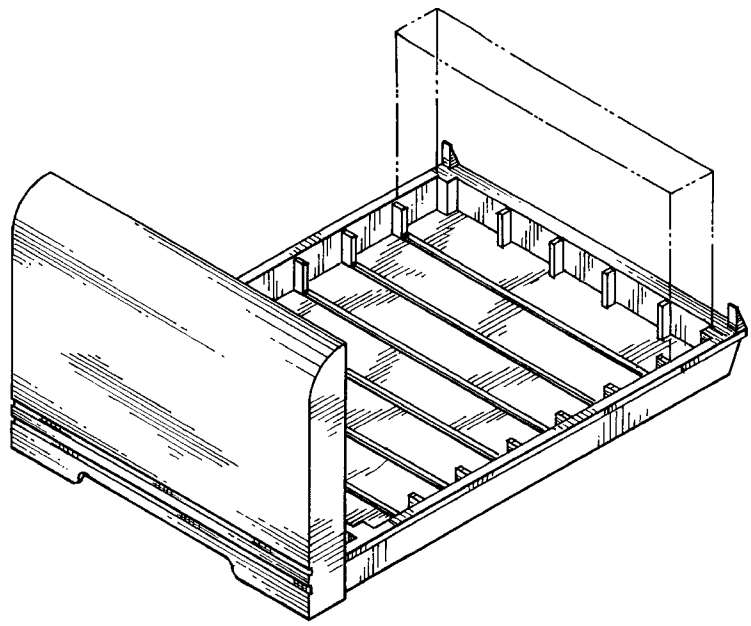

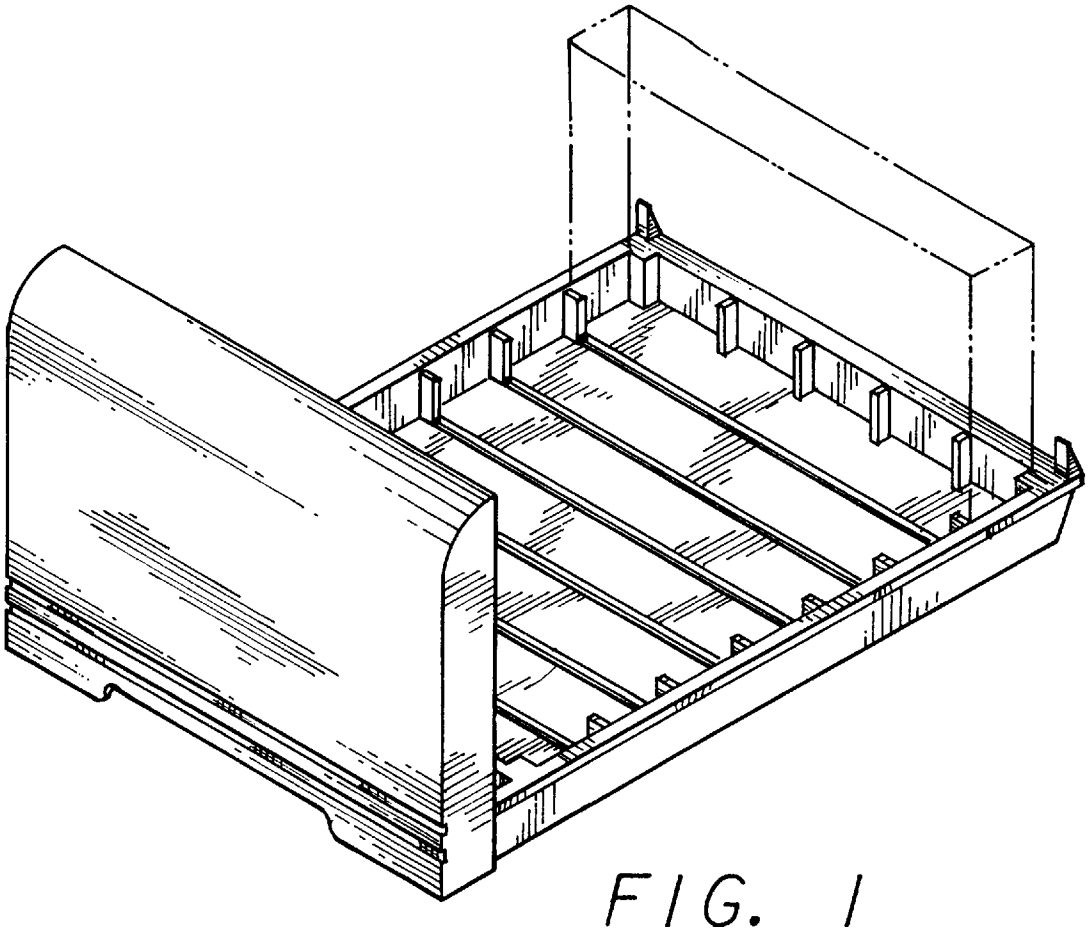

FIG. 1

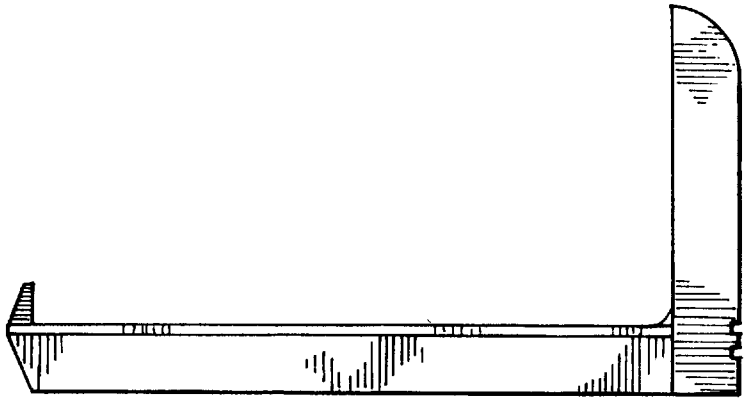

FIG. 2

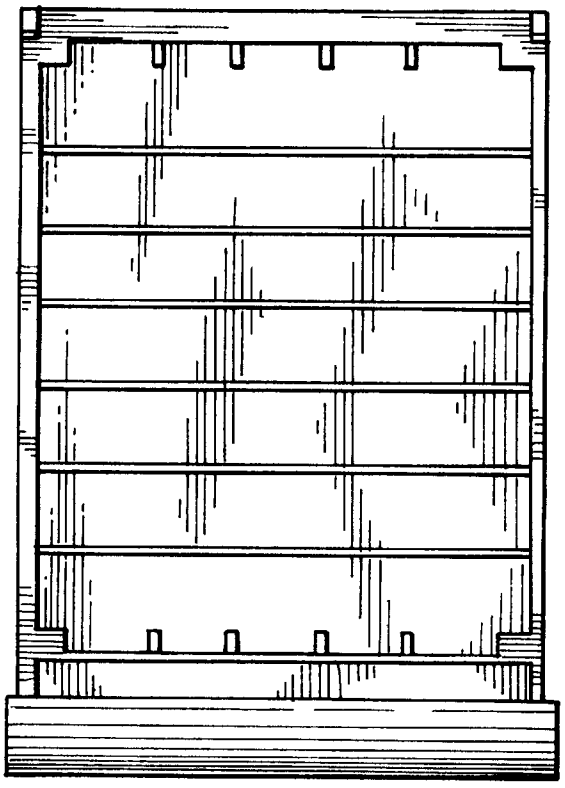

FIG. 3

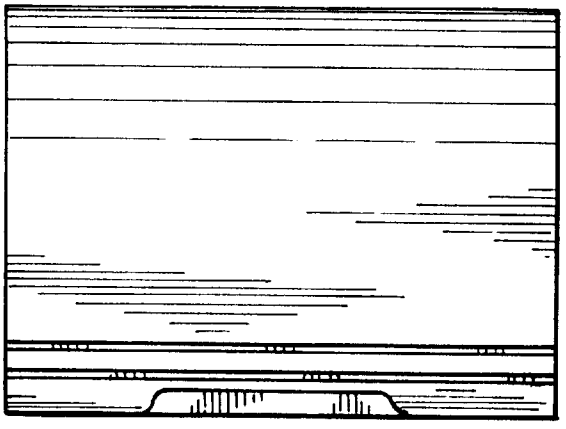

FIG. 4

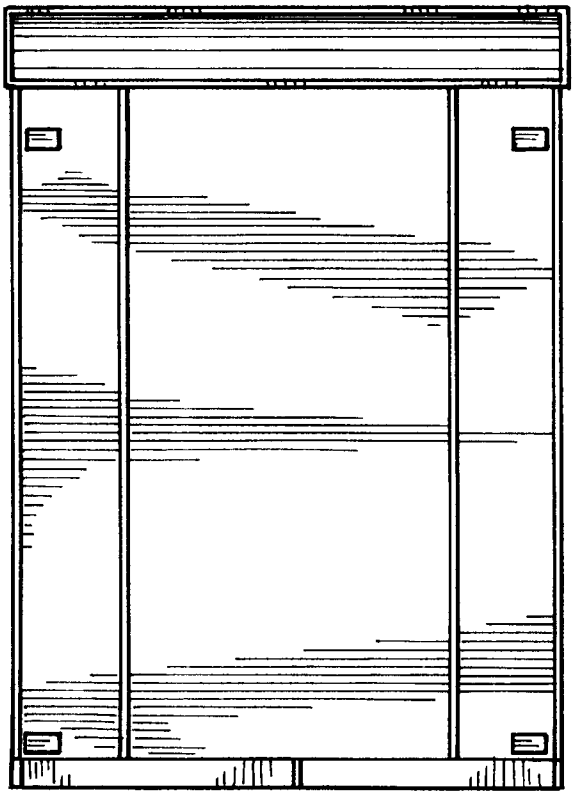

FIG. 5

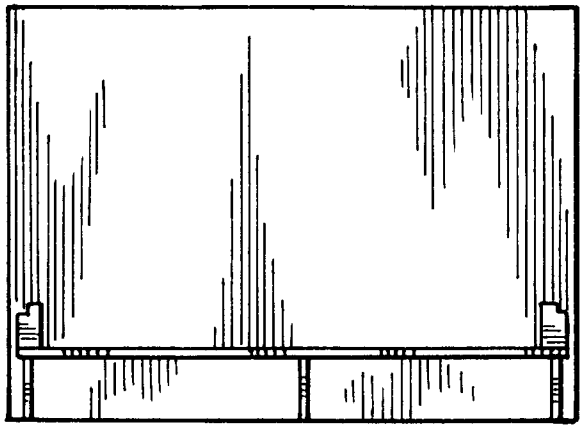

FIG. 6