March 28, 1950 N. R. FLETCHER 2,502,038

MICROMETER CALIPER

Filed Nov. 3, 1944

Fig. 1.

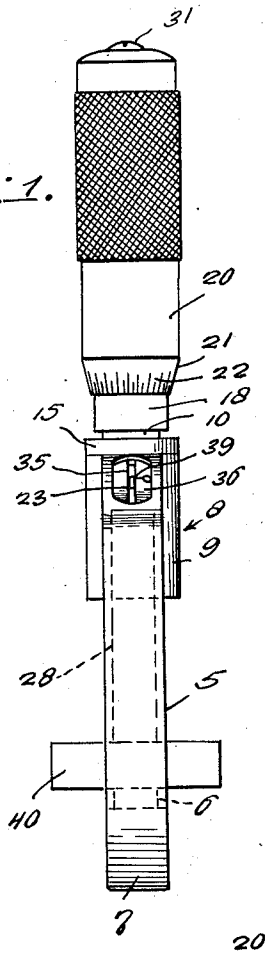

Fig. 2.

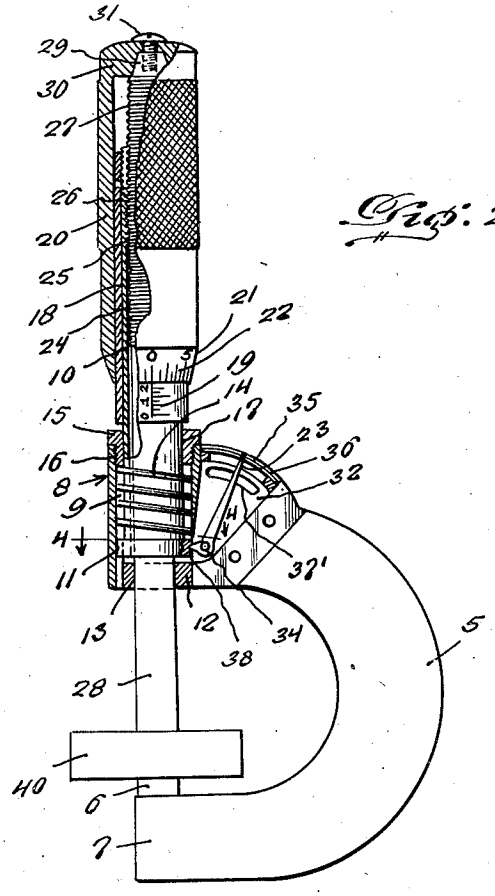

Fig. 3.

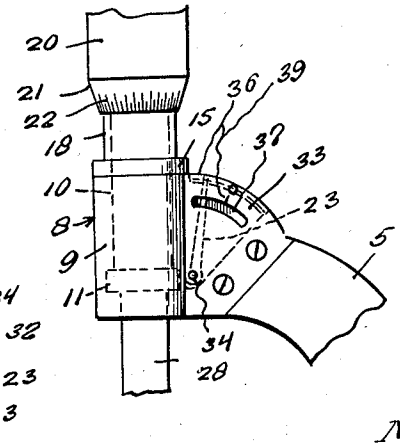

Fig. 4.

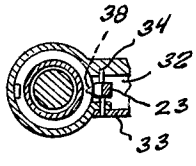

Inventor
Norman R. Fletcher.

By McMorrow and Berman
Attorneys

Patented Mar. 28, 1950 2,502,038

UNITED STATES PATENT OFFICE

2,502,038

MICROMETER CALIPER

Norman R. Fletcher, Erie, Pa.

Application November 3, 1944, Serial No. 561,737

1 Claim. (Cl. 33—147)

1

This invention relates to an improvement in micrometer calipers, the prime object being to eliminate the necessity for individual "feel" on the part of the operator in the accurate use of this type of precision measuring instrument, and to permit the use of the caliper on revolving stock in machinery, such as lathes, other cutting machines, grinders, etc.

An important object is to simplify the structure and keep the external appearance and form of the instrument within the general design and shape approximately of that of the ordinary conventional micrometer caliper.

A further object is to provide for handling the instrument conveniently and facilitating the ready reading of the indicator element from different angles of view in the handling and manipulation of the caliper in different positions in which it is applied to the work in use.

Other objects and advantages will hereinafter more fully appear.

An illustrative but non-limiting practical embodiment of the invention is illustrated in the accompanying drawings, in which:

Figure 1 is an elevation of the instrument in edge view of its body portion;

Figure 2 is a side elevation and partial sectional view of the instrument;

Figure 3 is a fragmentary side elevation of the part of the instrument in the region where the indicator element is located; and

Figure 4 is a fragmentary sectional view taken on the line 4—4 of Figure 2.

Referring now to the drawing in detail, numeral 5 designates generally the body portion of the instrument, the same being substantially U-shaped and approximately in the same form as the body portion of the ordinary conventional micrometer caliper. A conventional anvil element 6 is provided in the usual way on one leg 7 of the body member 5. The opposite leg 8 of the body member 5 is bored, as at 9, in axial alignment with the anvil element 6, in which bore certain elements of the improved work measuring means of the present invention work with longitudinally slidable movement therein.

An elongated tubular member or barrel 10, provided with an annular collar 11 at its lower end, has its lower end portion located in the bore 9 or sleeve portion of the body 5, the collar 11 being feather-keyed or splined to permit endwise or longitudinal movement but preventing rotation of the tube or barrel 10 in said bore or sleeve portion 9.

A plug 12 having an axial bore 13 is fitted tightly and held securely, in any conventional manner, within the lower end portion of the bore or sleeve portion 9 of the body 5. The tube or barrel 10 is yieldably held normally with its end collar 11 in contact with the plug 12 by a spring element 14 which is interposed between the collar portion 11 and a bushing 15 which is screwed, as at 16, into the upper end portion of the body bore or sleeve 9. This bushing 15 is provided with an axial bore 17 through which the tube or barrel element 10 works with an easy sliding fit.

2

The resiliently held tube or barrel member 10 of the caliper of the present invention, which supplements or is provided in place of the usual integral or fixedly mounted barrel of the ordinary micrometer caliper structure, has a separate sleeve 18 shrunk or otherwise fixedly secured over the present tube or barrel member 10 so as to be, in effect, an integral part of the tube or barrel 10. This sleeve 18 which, in practice, is made of a metal somewhat harder than that of which the tube or barrel 10 is made, has the graduated longitudinal scale 19 engraved or otherwise suitably inscribed thereon and corresponding to the similar scale which is usually inscribed directly on the conventional integral or fixed barrel member of the ordinary caliper. Except for the additional advantage in the minimization of wear on the barrel 10 due to the rotation of the manipulating thimble thereon, the barrel 10 of the instrument of the present invention need not have the additional sleeve 18 but have the scale 19 inscribed directly thereon.

The thimble element of the micrometer of the present invention, designated by the reference numeral 20, operates upon the tube or barrel 10 and cooperates with the longitudinal scale 19 substantially in the same manner as in the conventional micrometer caliper structure. That is to say, the inner end portion of the thimble is beveled off or tapered, as at 21, and provided thereon with a fractional annular scale 22 which is read in connection with the scale 19. There is some difference, however, in the effective reading of the measurement by the cooperation of the two scales 19 and 22 due to the correlated functioning of a special indicator element 23 in connection therewith, as will be presently described more fully in detail.

The tube or barral 10 of the device of the present invention is relief bored, as at 24, throughout the major portion of its length from its lower end upward, the upper remainder portion 25, which is of smaller inside diameter, is screw threaded, as at 26, to receive the screw threaded

upper end portion 27 of the spindle element 28. The form and provision of this spindle 28 is substantially the same as that of the ordinary spindle in the conventional micrometer caliper. That is to say, its lower portion is of substantially the same diameter as the anvil element 6 on the leg 7 of the body 5, and its upper portion of larger diameter and screw threaded, as at 27, works in the internally screw threaded portion 26 of the tube or barrel 10. The extreme upper end portion of the spindle 28 is tapered, as at 29, and received in a counterpart recess provided in the adjacent end portion 30 of the thimble 20, where it is securely fastened by a screw element 31 so that the spindle and thimble are rotatable together the one by the other. Thus, when the thimble 20 is rotated, turning the spindle 28 therewith, the spindle by its screw threaded fitting in the barrel 10, moves either inward or outward longitudinally in the barrel, according to the direction of rotation of the thimble.

A sector shaped recess or pocket 32 is provided in the base portion of the upper leg 8 of the body 5 (see Figure 2). This recess or pocket 32 houses the indicator element 23 and it is provided at one side with a removable cover plate 33 (see Figure 3). As shown, the indicator element 23 comprises a pointer member or needle which is pivotally mounted, as at 34, at its inner end, with its extreme outer end portion working through or in close proximity to a slot 35 provided in the arcuate top closure 36 of the recess or pocket 32. An arcuate slot 37 (see Figure 3) is provided in the removable side cover plate 33 for viewing the indicator element 23 from that side of the instrument. For the same purpose, that is to say, viewing the indicator element 23 from the opposite side of the instrument, a corresponding arcuate slot 37' is provided in the opposite side wall of the recess or pocket 32 (see Figure 2).

The indicator element 23 is provided near its pivot with a tapered angular toe which is engaged in a substantially counterpart pinhole or recess 38 provided in the adjacent peripheral face of the collar 11 of the tube or barrel member 10. With this provision and arrangement, and pivotal mounting of the indicator element 23 with the pintles of its hinge mounting 34 engaged in openings or recesses provided therefor in the side plate 33 and opposite side wall of the recess or pocket 32, an endwise or longitudinal movement of the barrel 10 causes an oscillation of the indicator element 23. In the normal position of the tube or barrel 10 with its collar portion in contact with the plug 12 the indicator element 23 is in a position coinciding substantially with the ends of the slots 35 and 37, 37', closely adjacent the sleeve portion 9 of the instrument, but when the barrel 10 is caused to move longitudinally so as to lift the collar portion 11 away from the plug 12 the indicator element 23 is accordingly swung in the direction toward the opposite ends of said slots 35, 37 and 37'.

At points coinciding with each other on the arcuate outer wall 36, cover plate 33 and opposite side wall of the recess or pocket 32, and approximately midway between the opposite ends of the slots in said parts, a single reference mark 39 is inscribed and the same may or may not be marked with a zero symbol, as desired. The relative position of the coinciding reference marks 39 in correlation to the longitudinal scale 19 on the outer sleeve member of the tube or barrel 10 of the instrument, is such that when the piece of

work to be measured (designated by the reference numeral 40 in Figures 1 and 2) has the micrometer of the present invention applied thereto, the thimble 20 is turned by the operator until the inner end of the spindle 28 moves into contact with the face of the work whose opposite face abuts the anvil 6 and without consideration as to any degree of pressure or feel on the part of the operator but merely watching the indicator element 23 and continuing rotation of the thimble 20 until the indicator element comes in coincidence or registration with one of the reference marks 39 which the operator has in sight at the time. That is to say, the correlation of the travel of the indicator element 23 with relation to the scales 19 and 22 is such that when the indicator element 23 registers or coincides with any one of the reference marks 39, which marks are in exact coincidence with each other, the extreme inner end of the thimble 20 is in exact coincidence with the particular reference line of the scale 19 for correct indication of the measurement of the piece of work 40. Should the piece of work be under-size for the dimension desired, the indicator element 23 will not have reached coincidence with the reference mark 39, or if the work should be oversize, the indicator element 23 will move beyond the reference mark 39 and toward the end of the slots 35, 37, and 37' remote from the sleeve 9 of the instrument. In this connection, it is here noted that the proportionate travel of the indicator element 23 in correlation to the scales 19 and 22, is the same for any and all measurements to be effected in an instrument of the character of the present invention of a definite size for a maximum measurement. Thus, whatever the size of the piece being measured may be, all that the operator has to do in manipulation of the instrument is to continue rotation of the thimble 20 without any regard as to the degree of pressure exerted by manual operation of the spindle 28 and exercise of expert feel in pressing the spindle upon the work, and merely observe the indicator element 23 and then cease rotation of the thimble when the indicator element reaches the reference mark 39. At this time the exact measurement of the piece of work 40 will be determined by reading the indication of the correlated scales 19 and 22. For example, should the desired thickness of the piece of work 40 be twenty hundredths (.20) or two hundred thousandths (.200) of an inch that dimension will be accordingly indicated if the piece of work is of the proper size. By the same token, under or over size of the piece of work will be noted because the reading of the scales 19 and 22 is never taken in the use of the instrument except at such time that the indicator element 23 is in registration or coincidence with the respective reference marks 39.

The provision of the present invention is to eliminate the necessity for expert individual "feel" in the application of the instrument to the piece of work being measured and yet obtain accurate indication of the measurements, and at the same time provide an ample measure of safety in the yieldability of the spring pressed tube or barrel 10 of the device so that the instrument may be used on rotating stock in machinery such as lathes, other cutting machines, grinders, etc.

The herein illustrated structure is but one practical adaptation of the invention, and the same evinces considerable modification within the purview of the invention as defined in the

appended claim. The invention, therefore, is not limited to the specific construction and arrangement shown.

It is here noted that while the present invention is illustrated as applied to an outside type of caliper it is obvious that the invention is equally as applicable to micrometer calipers of other types and especially depth micrometers, and of many different sizes in all types.

Having thus described the invention, what is claimed is:

In a micrometer caliper, the combination with a U-shaped body portion having an anvil element on one leg thereof and having a spindle element on the other leg thereof mounted for movement relative to said anvil element, of an indicator operatively connected to said spindle element, said indicator comprising a collar surrounding said spindle element and carried by the latter, said collar being provided with a recess in its peripheral face, a pointer member arranged in said body portion adjacent said spindle element and mounted for movement toward and away from said spindle element, and means embodying a toe carried by said pointer member and engaging said recess for interconnecting said pointer member to the latter.

NORMAN R. FLETCHER.

REFERENCES CITED

The following references are of record in the file of this patent:

UNITED STATES PATENTS

Number	Name	Date
211,975	Dickinson	Feb. 4, 1879
1,526,115	Carlson	Feb. 10, 1925

FOREIGN PATENTS

Number	Country	Date
47,971	Switzerland	Aug. 1, 1909