(No Model.)

F. SELLE.

END GATE.

No. 388,002. Patented Aug. 14, 1888.

Fig. 1.

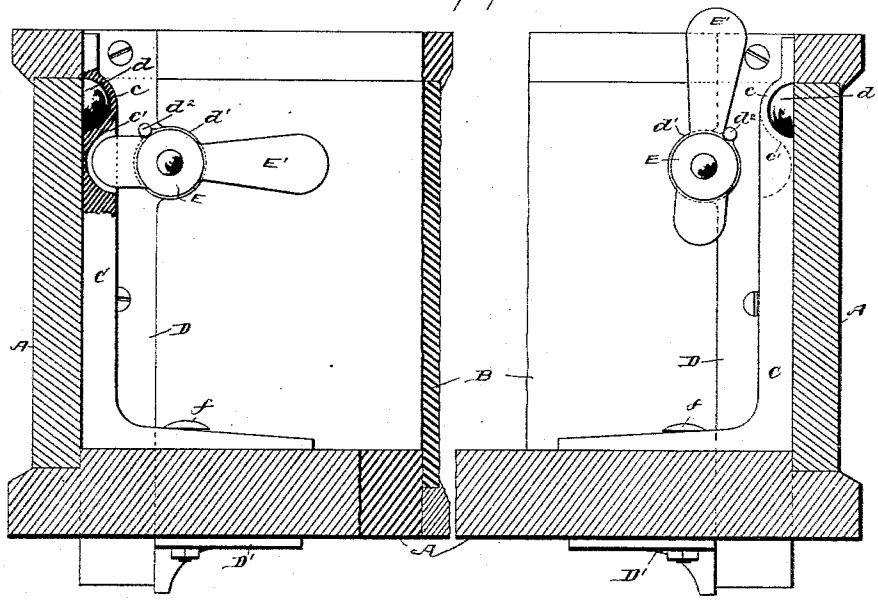

Fig. 2.

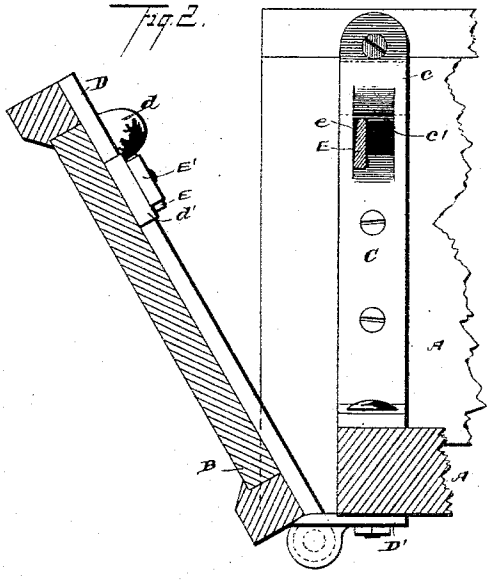

Fig. 3.

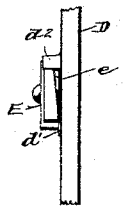

WITNESSES.
C. S. Amstutz.
Geo. W. Ering

Ferdinand Selle. INVENTOR.
By Leggett & Leggett
Attorney.

N. PETERS. Photo-Lithographer, Washington, D. C.

UNITED STATES PATENT OFFICE.

FERDINAND SELLE, OF AKRON, OHIO, ASSIGNOR TO THE SELLE GEAR COMPANY, OF SAME PLACE.

END-GATE.

SPECIFICATION forming part of Letters Patent No. 388,002, dated August 14, 1888.

Application filed December 5, 1887. Serial No. 257,022. (No model.)

To all whom it may concern:

Be it known that I, FERDINAND SELLE, of Akron, in the county of Summit and State of Ohio, have invented certain new and useful Improvements in End-Gates for Vehicles; and I do hereby declare the following to be a full, clear, and exact description of the invention, such as will enable others skilled in the art to which it pertains to make and use the same.

My invention relates to improvements in end-gates for vehicles in which the mechanism for bracing the sides of the body for holding the end-gate closed and for holding the sides of the body from spreading while the end-gate is closed are arranged on the inside of the body, to the end that the parts are strong, convenient, and do not mar the finish or effect of the body from the outside.

My invention also relates to details of construction, hereinafter described, and pointed out in the claims. Heretofore, for such purpose various devices have been employed—such, for instance, as rods, catches, and braces—that were partially or wholly exposed outside the body of the vehicle, all or any of which were blemishes and marred the beauty of the body outside. I have therefore devised the mechanism illustrated in the accompanying drawings.

Figure 1 is a front or inside elevation of the tail-board and attachment. Fig. 2 is an elevation taken at right angles to the view shown in Fig. 1. In both of these figures the central portion of the tail-board is broken away to reduce the size of the drawings. Fig. 3 is an end view of the latch or dog for securing the end-gate in its closed position.

A represents the body of the vehicle; B, the end-gate, and C the metal knees that support the sides of the body next to the end-gate.

D are straps that are fastened to the inside of the end-gate near the ends of the latter, usually by means of wood-screws, these straps each forming one member of the respective hinges, and are pivoted to the other member, D′, of the hinges, the latter being secured by bolts *f*, that pass, also, through the lower arm of knees C, and of course through the intervening wood-work, thus binding the parts firmly together.

The straps D have ears *d* located near the upper ends thereof and projecting forward, each ear representing substantially the half-section of a cone, the flat side thereof presenting outward, and the base of the cone-section presenting rearward, where it is integral with the strap. These ears enter loops *c*, cast on knees C near the upper ends of the latter. In closing the end-gate the draft on the inner or conical side of ears *d* draws inward on loops *c*, and holds the sides of the body firmly in place against the ends of the tail-gate. Raised seats *d′* are cast integral with the straps D, to which seats are respectively pivoted the dogs or latches E. The handles E′ of these dogs are of sufficient weight to hold the dog in its horizontal position, as shown at the left hand in Fig. 1, in which position the point of the dog enters recess *c′* of the knee, the one edge of the point of the dog being beveled at *e*, (see Fig. 3,) so as to draw the end-gate toward the knee. Pins d^2 project forward from straps D and stop the dog in its horizontal or in its upright position, the relation of parts being such that the handles of the dogs when turned upward against pins d^2 have passed the center of gravity, and consequently maintain their upright position until turned down by hand to latch the end-gate. With such construction the vehicle-body outside has the same appearance as a body made without a movable end-gate. At the same time the parts are strong, durable, and convenient of access.

What I claim is—

1. The combination, with a vehicle-body and an end-gate hinged to the body, of metal knees secured inside the body next the end-gate, and securing bolts or rivets extending through the knees and through the wood-work and lower member of the hinges, substantially as set forth.

2. The combination, with a vehicle-body, end-gate, hinges, and knees, substantially as indicated, of loops on the knees, and ears on the straps of the hinges for entering such loops to hold the body sides from spreading, substantially as set forth.

3. The combination, with a vehicle-body, end-gate, hinges, and knees, substantially as indicated, of loops on the knees, and ears on

the hinge-straps, said ears having conical sides adapted to draw the vehicle sides inward, substantially as set forth.

4. The combination, with a vehicle-body, end-gate, knees, and hinges, substantially as indicated, of latches pivotally secured to the hinge-straps, recesses in the knees for receiving the latches, and stops to hold the latches in their latched or unlatched position, the parts being arranged substantially as set forth.

In testimony whereof I sign this specification, in the presence of two witnesses, this 8th day of August, 1887.

FERDINAND SELLE.

Witnesses:
ALBERT E. LYNCH,
CHAS. H. DORER.