Aug. 11, 1959 A. LIGHTBODY ET AL 2,898,856

SELF-PROJECTED MISSILES

Filed June 5, 1952 2 Sheets-Sheet 1

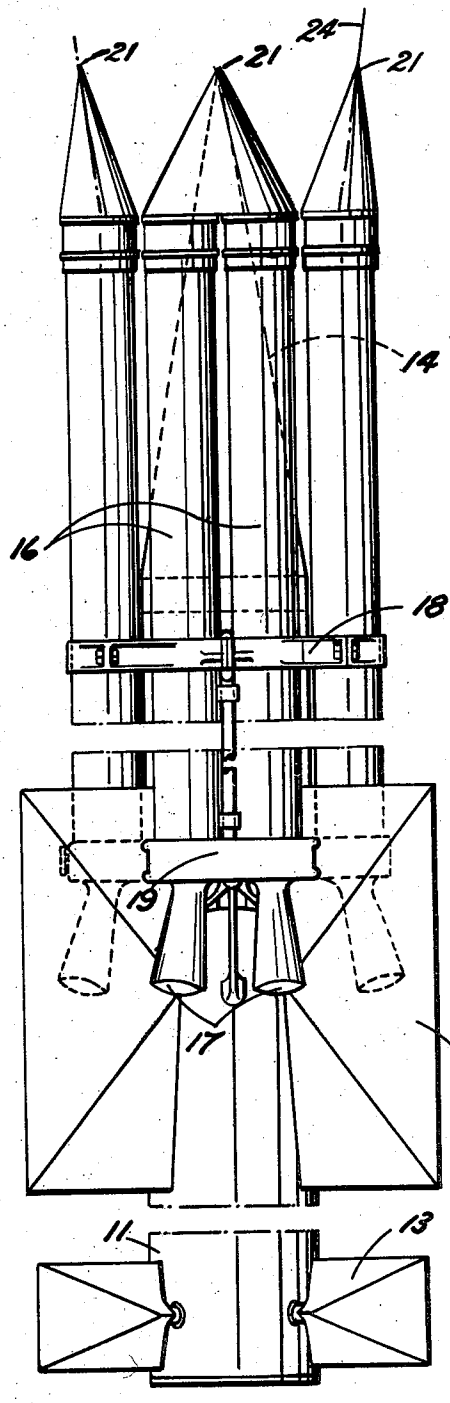


Fig. 1

INVENTORS
A. LIGHTBODY &
J. M. JOHNSTON
BY Mawdinney & Mawdinney
ATTYS.

Aug. 11, 1959 A. LIGHTBODY ET AL 2,898,856

SELF-PROJECTED MISSILES

Filed June 5, 1952 2 Sheets-Sheet 2

Fig. 4

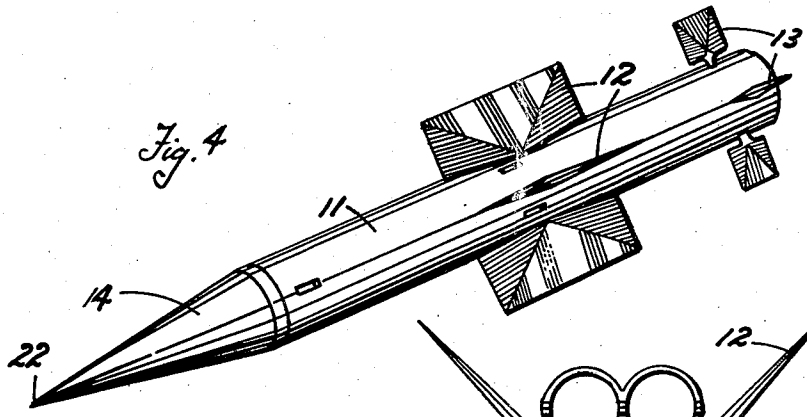


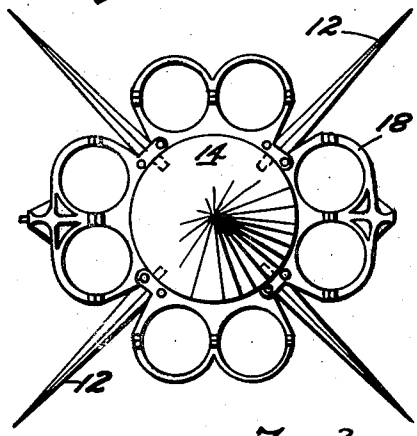


Fig. 3

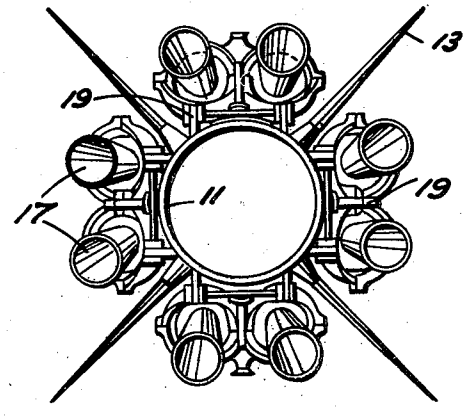


Fig. 2

INVENTORS
A. LIGHTBODY &
J. M. JOHNSTON
BY Mawhinney & Mawhinney
ATTYS.

United States Patent Office

2,898,856

Patented Aug. 11, 1959



2,898,856

# SELF-PROJECTED MISSILES

Alexander Lightbody and James Morrison Johnston, Baginton, near Coventry, England, assignors to Sir W. G. Armstrong Whitworth Aircraft Limited, Baginton, near Coventry, England

Application June 5, 1952, Serial No. 291,931

Claims priority, application Great Britain July 6, 1951

3 Claims. (Cl. 102—49)

This invention relates to a self-projected missile of the kind having discardable, "wrapped-round" boost motors—i.e., at least two symmetrically-arranged boost motors disposed round the missile, with their axes substantially parallel thereto, to provide acceleration during the initial stage of the flight for a matter of a few seconds, prior to their being discarded.

In practice it is known to use four such symmetrically-arranged boost motors respectively disposed between four main wings of the missile. Alternatively, each boost motor could be replaced by a group of two or more motors.

The object of the invention is to arrange the boost motors in a more satisfactory manner than hitherto, from the aero-dynamic point of view.

According to the invention, the boost motors are disposed with their forward ends substantially in the plane through the forward end of the missile at right-angles to the axis of the latter.

According to a further feature, the forward ends of the boost motors are secured to the missile just rearwardly of the tapering forward end of the missile, and the rear ends of the motors are also secured to the missile.

According to a still further feature, the forward ends of the boost motors are cones with axes which are symmetrically divergent (forwardly) from the axis of the missile at an angle which is greater, but not much greater, than the maximum design angle of yaw of the missile during boosted flight.

When applying the invention to a missile in which the boost motors are arranged in groups, for example, groups of two or more motors, the motors of each group may share a common nose, the pointed extremity of which, in plan, lies centrally of the motors of the group, being, in side elevation, outwardly displaced as aforesaid.

In the accompanying drawings:

Figure 1 is a plan of a self-projected missile having discardable boost motors arranged according to the invention;

Figure 2 is a rear view thereof;

Figure 3 is a front view thereof, but with the boost motors omitted; and

Figure 4 is a perspective view, to a smaller scale, of the missile after the boost motors and retaining means therefor have been jettisoned.

It will be seen from the drawings that the missile has a main cylindrical portion **11** carrying four main planes **12** and four tail planes **13**, whilst the nose **14** of the missile is of conical shape. In the present instance there



is a pair of boost motors **16, 16** arranged with their trailing ends and delivery nozzles **17** disposed between each adjacent pair of main planes **12**. The front ends of the boost motors are secured to the missile by a detachable ring bracket, indicated at **18**, the rear ends being secured to the missile by four independent, detachable brackets indicated generally at **19, 19**. (The securing means are disclosed in the specification of our co-pending application Serial No. 291,932, filed June 5, 1952, now Patent #2,745,347.)

It will be observed from Figure 1 that the forward extremities **21, 21** of the boost motors are in the plane, through the forward extremity **22** of the missile, which is at right-angles to the axis of the latter.

It will also be noted that the forward ends of the boost motors (i.e., the ring bracket **18**) are secured to the missile just rearwardly of the conical front end **14** of the missile.

The forward ends of the boost motors are cones with axes which are symmetrically divergent (forwardly) from the axis of the missile (as shown most clearly at **24** in Figure 1) at an angle which is greater, but not much greater, than the maximum design angle of yaw of the missile during boosted flight.

Lastly, when the boost motors are arranged in pairs, as in the present instance, each group of two motors may share a common nose, as shown most clearly by Figure 1, the pointed extremity **21** of which lies between the two motors of the group, being, in side elevation, outwardly displaced as above-mentioned.

What we claim as our invention and desire to secure by Letters Patent of the United States is:

1. A self-projected missile of the kind having discardable, wrapped round boost motors, the forward ends of the boost motors being cones with axes which are symmetrically divergent forwardly from the axis of the missile at an angle which is greater than the maximum design angle of yaw of the missile during boosted flight.

2. A self-projected missile of the kind having discardable, wrapped round boost motors, in which the boost motors are arranged in groups, the motors of each group sharing a common nose having a pointed extremity which, in plan, lies centrally of the motors of the group, all the common noses being cones with axes which are divergent from the axis of the missile.

3. A self-projected missile of the kind having discardable, wrapped round boost motors, in which the boost motors are arranged in groups, the motors of each group sharing a common nose having a pointed extremity which, in plan, lies centrally of the motors of the group, all the common noses being cones with axes which are divergent forwardly from the axis of the missile at an angle which is greater than the maximum design angle of yaw of the missile during boosted flight.

**References Cited** in the file of this patent

UNITED STATES PATENTS

| | | |
|---|---|---|
| 1,102,653 | Goddard | July 7, 1914 |

FOREIGN PATENTS

| | | |
|---|---|---|
| 229,444 | Switzerland | Jan. 17, 1944 |
| 653,024 | Great Britain | May 9, 1951 |