US010424984B2

(12) **United States Patent**
Kojima et al.

(10) **Patent No.: US 10,424,984 B2**
(45) **Date of Patent: Sep. 24, 2019**

(54) **ROTATING ELECTRICAL MACHINE COIL, PRODUCTION METHOD OF ROTATING ELECTRICAL MACHINE COIL, AND ROTATING ELECTRICAL MACHINE**

(71) Applicant: **Hitachi, Ltd.**, Chiyoda-ku, Tokyo (JP)

(72) Inventors: **Hiroaki Kojima**, Tokyo (JP); **Kenji Ikeda**, Tokyo (JP); **Naohiro Hiruta**, Tokyo (JP); **Daisuke Kamegawa**, Tokyo (JP)

(73) Assignee: **Hitachi, Ltd.**, Tokyo (JP)

(*) Notice: Subject to any disclaimer, the term of this patent is extended or adjusted under 35 U.S.C. 154(b) by 569 days.

(21) Appl. No.: **15/073,804**

(22) Filed: **Mar. 18, 2016**

(65) **Prior Publication Data**

US 2016/0301274 A1 Oct. 13, 2016

(30) **Foreign Application Priority Data**

Apr. 13, 2015 (JP) 2015-081485

(51) **Int. Cl.**

H02K 3/40	(2006.01)
H02K 3/34	(2006.01)
H02K 15/10	(2006.01)
H02K 15/12	(2006.01)

(52) **U.S. Cl.**

CPC ***H02K 3/34*** (2013.01); ***H02K 15/105*** (2013.01); ***H02K 15/12*** (2013.01)

(58) **Field of Classification Search**

CPC .. H02K 3/30; H02K 3/34; H02K 3/38; H02K 3/40

See application file for complete search history.

(56) **References Cited**

U.S. PATENT DOCUMENTS

6,140,733 A * 10/2000 Wedde H02K 3/345 310/196

FOREIGN PATENT DOCUMENTS

JP	58-212349	A	12/1983
JP	2006-325357	A	11/2006
JP	2007-200986	A	8/2007
JP	2013-66382	A	4/2013

OTHER PUBLICATIONS

Japanese-language Office Action issued in counterpart Japanese Application No. 2015-081485 dated Feb. 5, 2019 with English translation (six (6) pages).

* cited by examiner

Primary Examiner — Dang D Le

(74) *Attorney, Agent, or Firm* — Crowell & Moring LLP

(57) **ABSTRACT**

A rotating electrical machine includes a plurality of coil conductors, and an insulating tape. The insulating tape is wound around the coil conductors a plurality of times to form an insulating layer. The insulating layer corresponds to at least a part of the coil conductors protruded from the core is provided so that a part of the wound insulating tape is adhered.

8 Claims, 11 Drawing Sheets

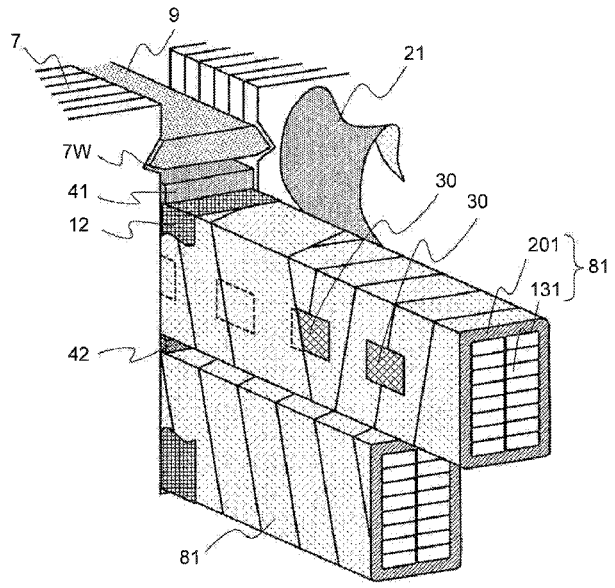

FIG. 1

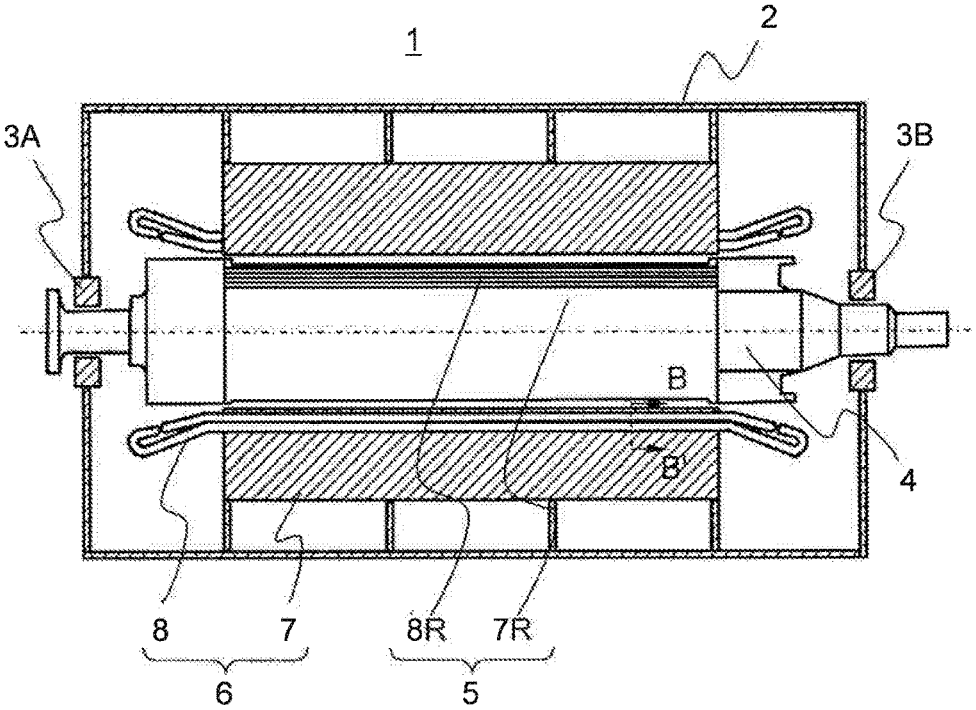

FIG. 2

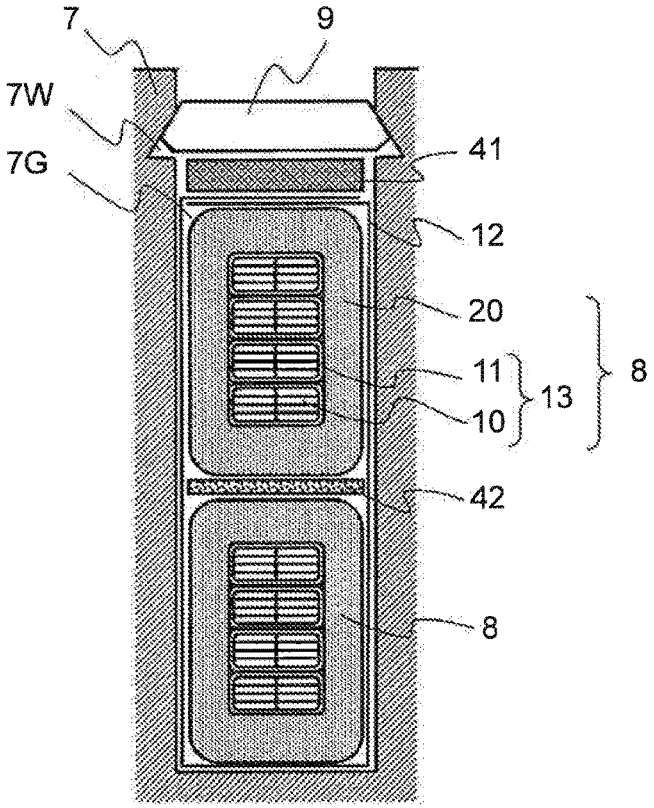

FIG. 3

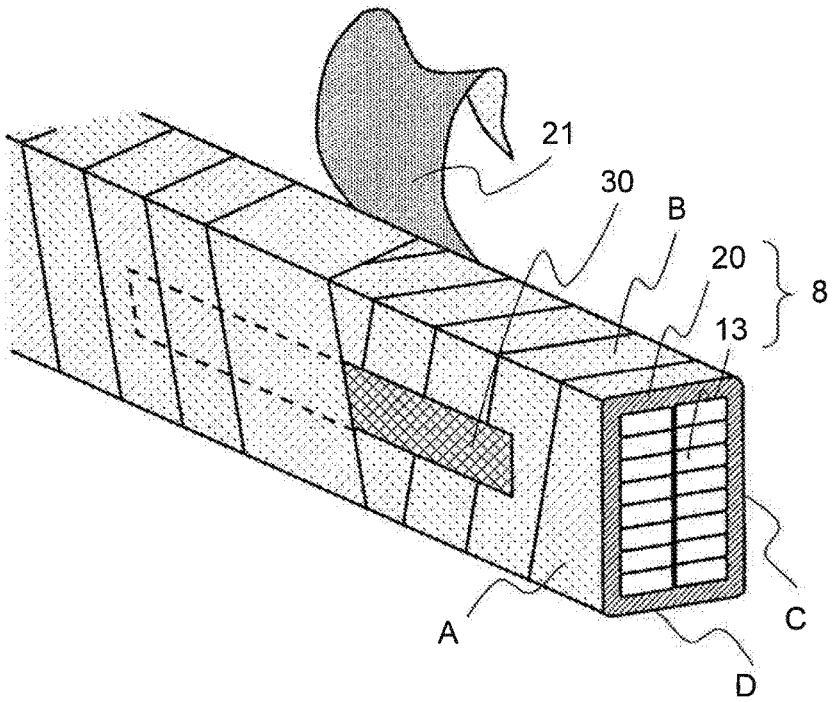

FIG. 4

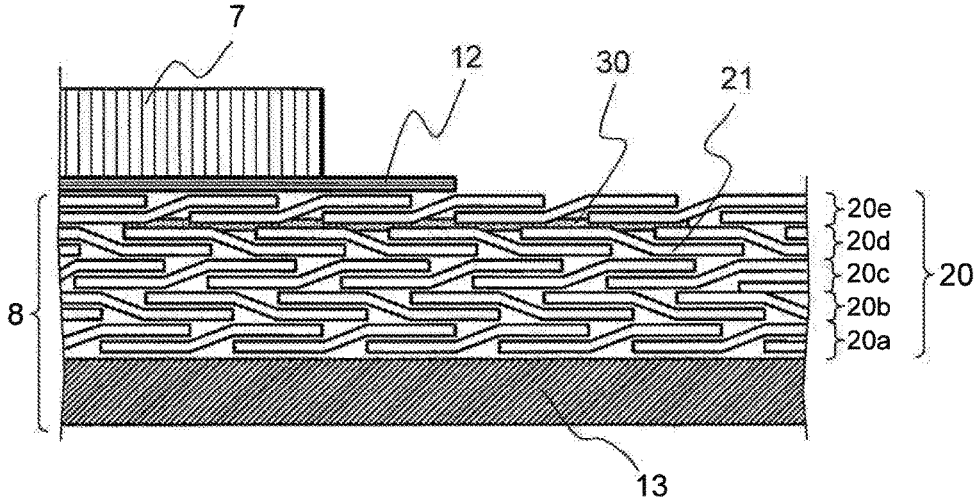

FIG. 5

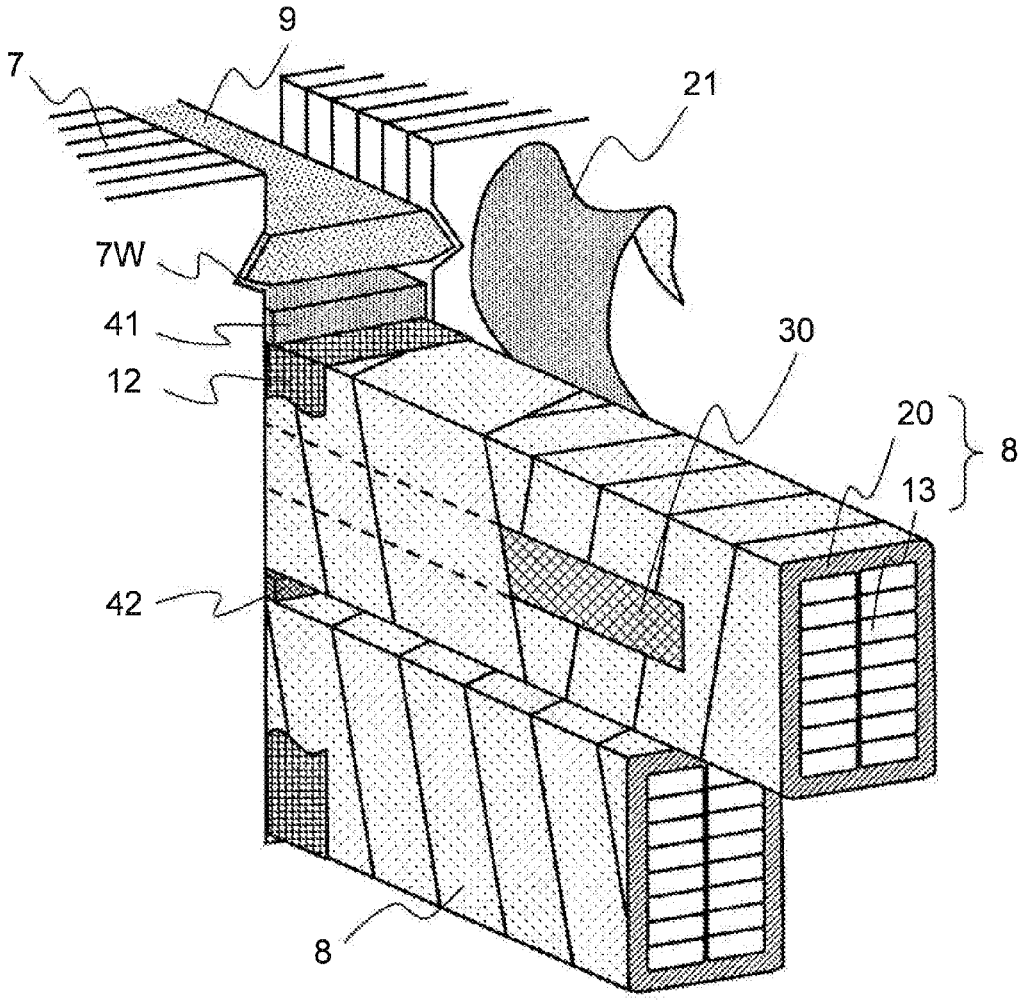

FIG. 6

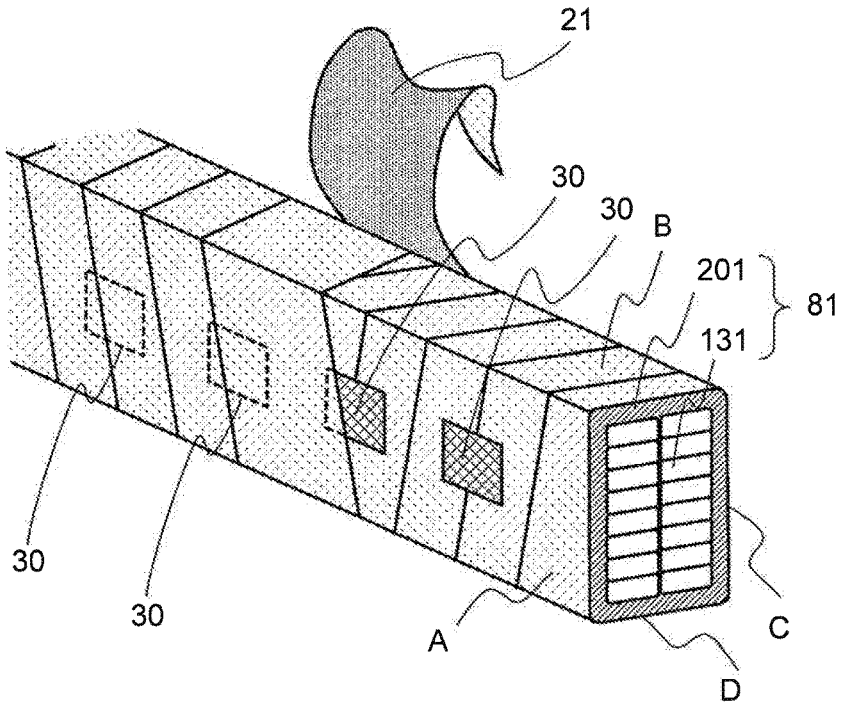
21
30
30
B
201
81
131
30
30
A
C
D

FIG. 7

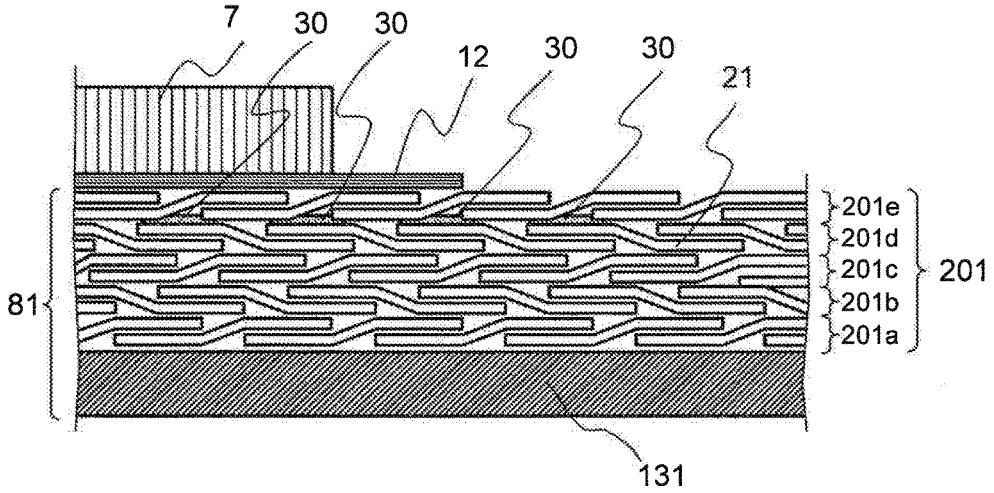
7
30
30
12
30
30
21
201e
201d
201c
201b
201a
201
81
131

FIG. 8

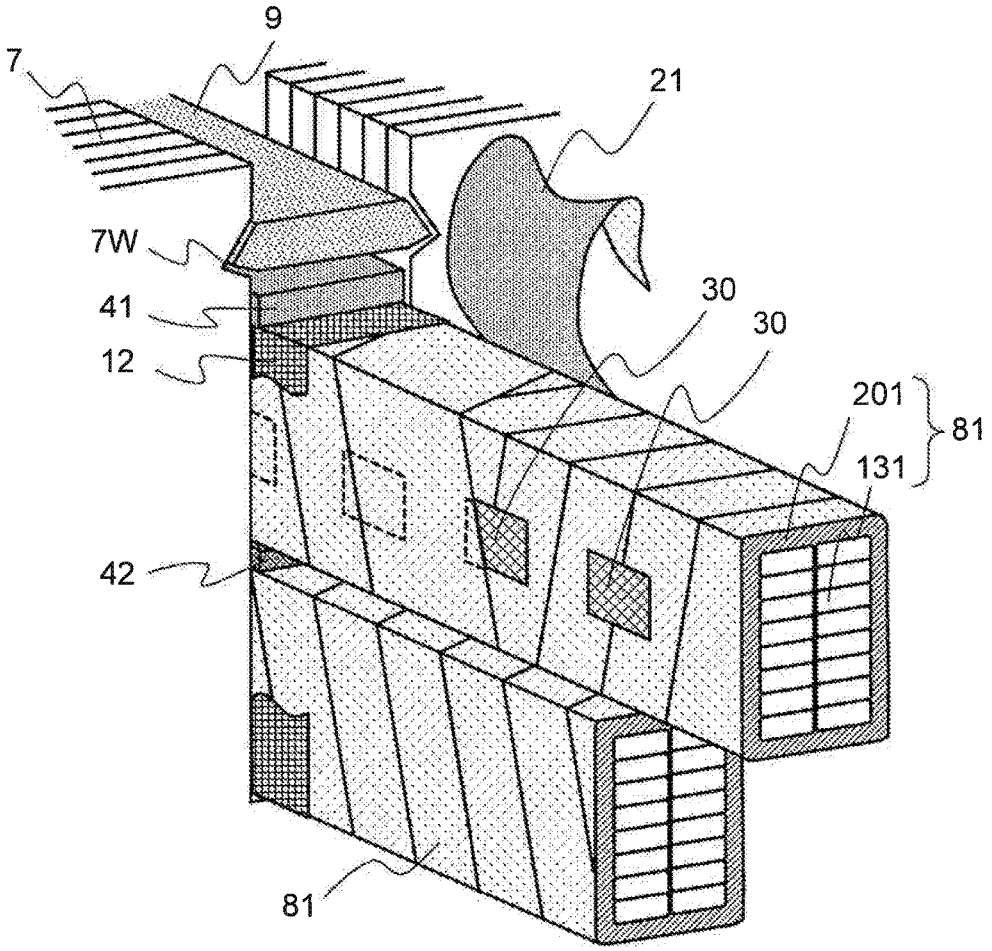

FIG. 9

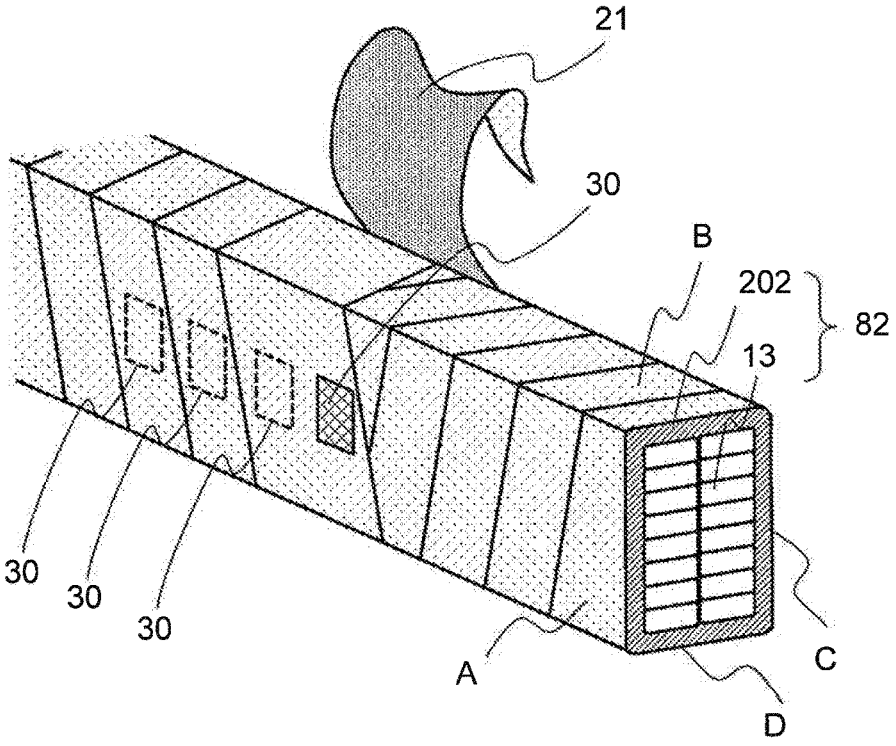
21
30
B
202
82
13
30
30
30
A
C
D

FIG. 10

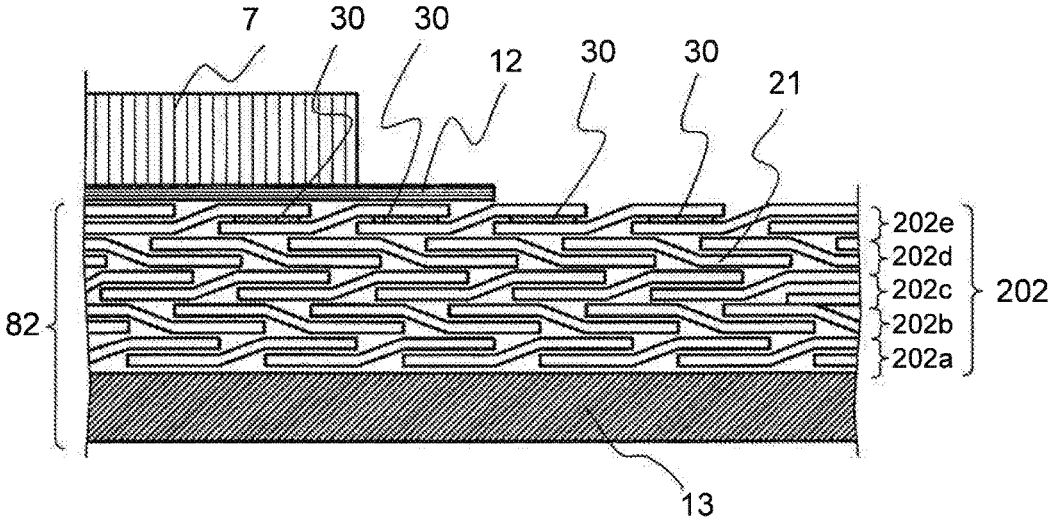
7
30
30
12
30
30
21
202e
202d
202c
202b
202a
202
82
13

FIG. 11

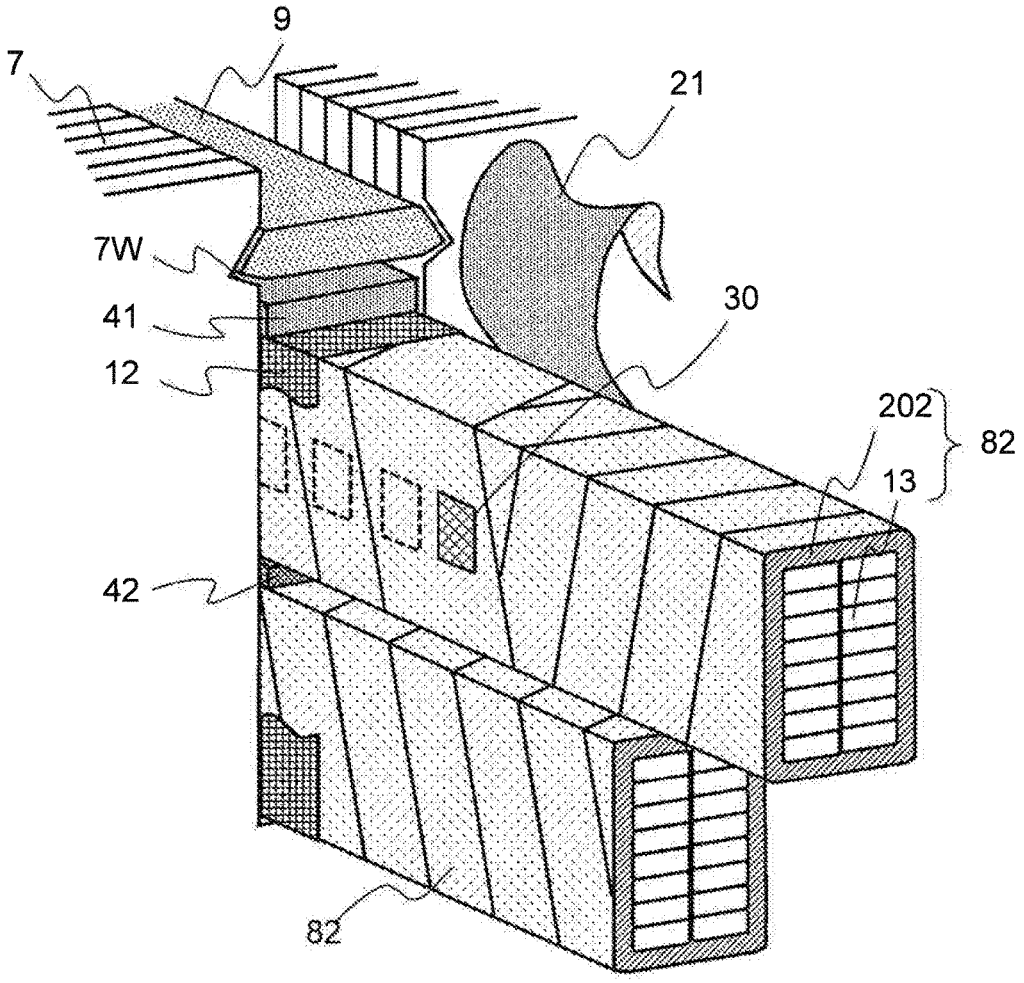

FIG. 12

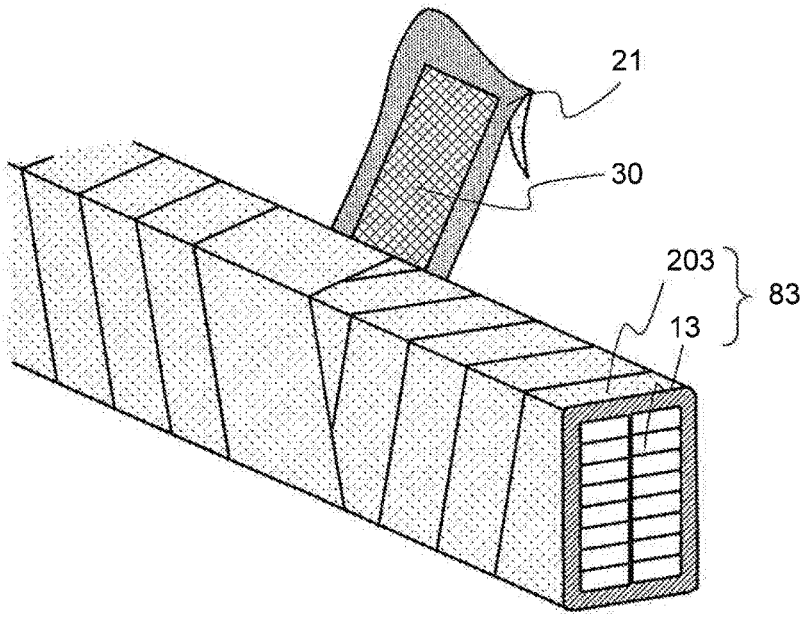
21
30
203
83
13

FIG. 13

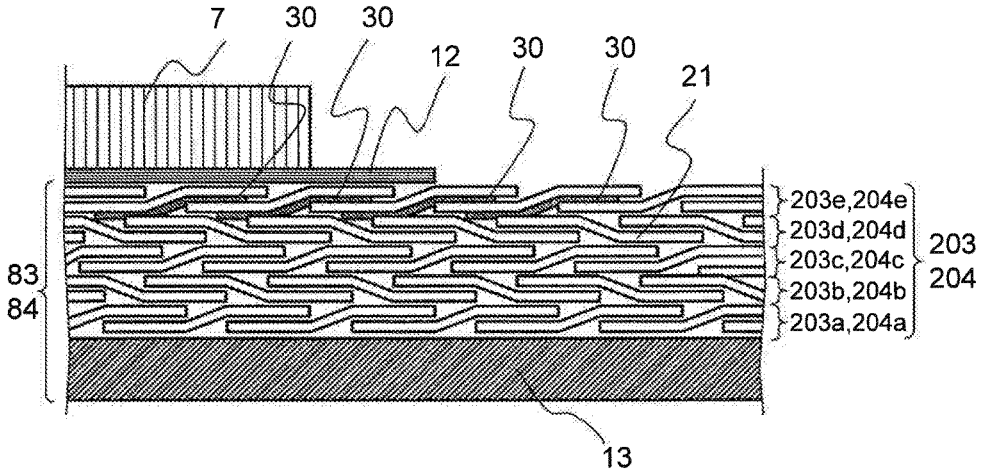
7
30
30
12
30
30
21
203e,204e
203d,204d
203c,204c
203b,204b
203a,204a
203
204
83
84
13

FIG. 14

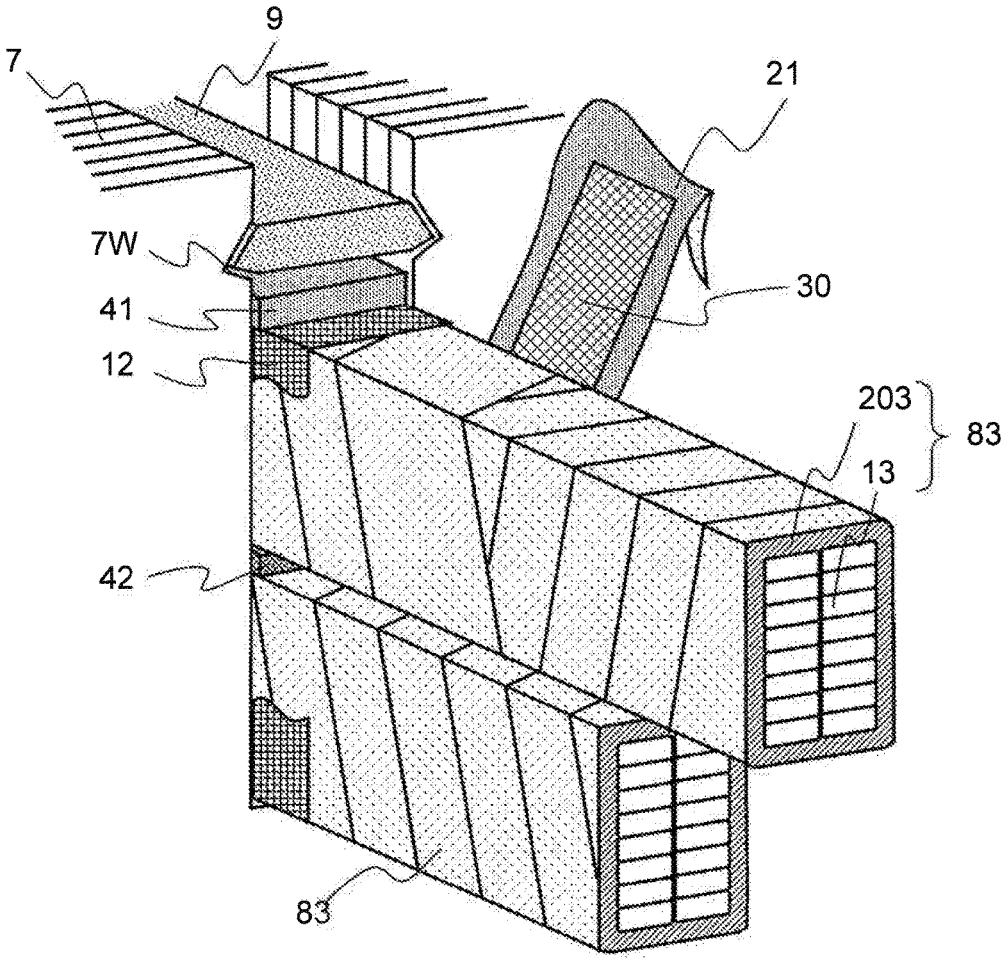

FIG. 15

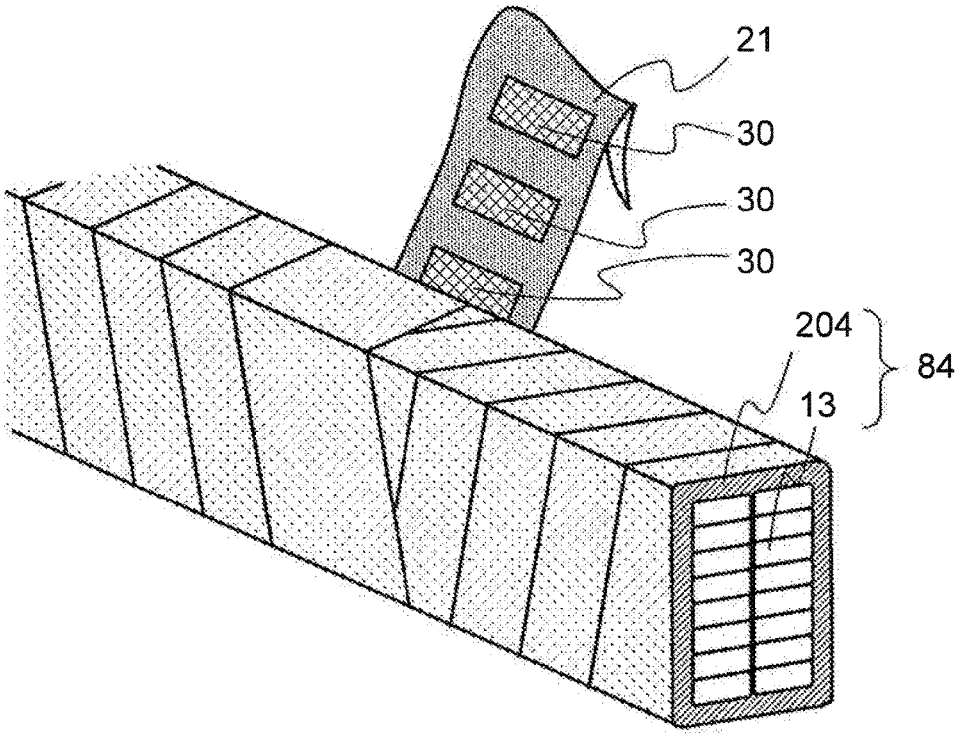

FIG. 16

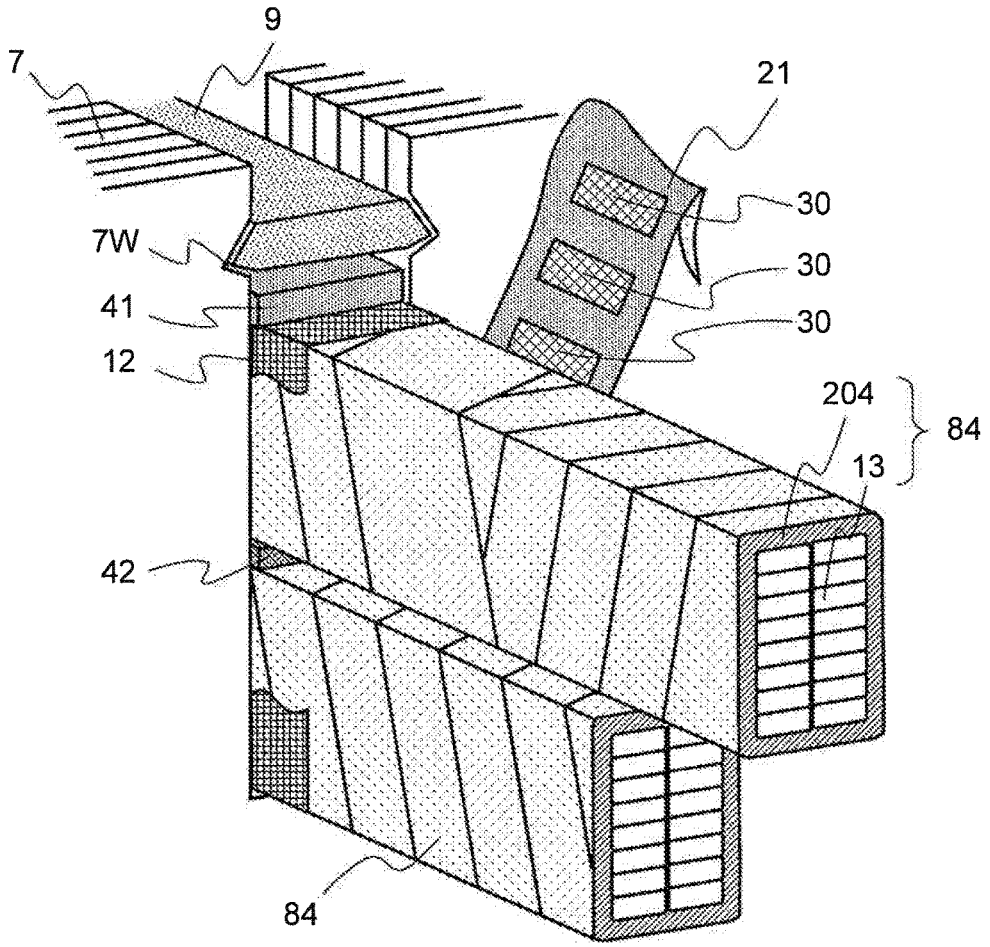

ROTATING ELECTRICAL MACHINE COIL, PRODUCTION METHOD OF ROTATING ELECTRICAL MACHINE COIL, AND ROTATING ELECTRICAL MACHINE

FIELD OF THE INVENTION

The present invention relates to a rotating electrical machine coil suitable for performing impregnation with insulating resin and curing the insulating resin in a state in which the rotating electrical machine coil is received in a core, a production method thereof, and a rotating electrical machine to which the rotating electrical machine coil is applied.

DESCRIPTION OF THE RELATED ART

In rotating electrical machines represented by high-voltage electric motors for a general industry, railways, and the like and high-voltage power generators such as wind power generators, a stator is formed by receiving a stator coil in a slot of a stator core, and the stator core and the stator coil are insulated by performing impregnation with insulating resin after winding an insulating tape around the coil. This configuration is formed by the following methods: a method in which impregnation with resin and curing of the resin are performed at the time of forming a coil of a stator coil and then the coil is received in a core; and a method in which a coil is received in a core and then impregnation with insulating resin and curing of the insulating resin are performed.

Specifically, in the latter method, impregnation with insulating resin is performed in a vacuum state in a state in which the rotating electrical machine coil that has not been impregnated with the insulating resin is provided in the core, and then the insulating resin with which the coil and the core have been impregnated is cured. Therefore, insulation of the rotating electrical machine coil is secured, and the rotating electrical machine coil and the core have no gap.

However, a rotating electrical machine coil around which an insulating tape is wound, which has not been impregnated with insulating resin, has an ununiform bulge in some cases. A bulge of a part received in the core is suppressed by an inner wall or the like of a slot of the core, but a part of the coil protruded outside from the core has a bulge. Therefore, in the case where impregnation with insulating resin and curing of the insulating resin are performed, there is a possibility that a main insulating layer of the part of the coil protruded outside from the core has a void or is peeled off and partial discharge in the main insulating layer occurs.

In order to solve such a problem, JP-A-2013-66382 discloses a production method in which, after a stator coil is received in a stator core, a jig for pressing a part around an end surface in an axial direction of the stator core is inserted, and then an impregnation curing process of insulating resin is performed, and, after the process, the jig is removed.

JP-A-2013-66382 also discloses a method in which a heat shrinkable semiconductivity tape is wound around an outer circumference of a main insulating layer to form a heat shrinkable slot corona protection layer and the heat shrinkable slot corona protection layer is extended to a part protruded outside from the core.

SUMMARY OF THE INVENTION

According to the production method using a jig, which is disclosed in JP-A-2013-66382 described above, it is possible to perform an impregnation curing process of insulating resin while suppressing a bulge of a coil protruded outside from a core. Thus, it is possible to form a main insulating layer with no void or peeling off.

However, in the case of the production method using a jig, it is necessary to arrange the jig in the vicinity of each of both end surfaces of the cores protruded from the cores of the plurality of (normally, several tens or more of) coils of a rotating electrical machine and remove the jig after the impregnation curing process. Thus, it is problematic in that man-hours are remarkably increased and a space for arranging the jig needs to be secured.

Further, in the production method, it is necessary to sufficiently consider not damaging the main insulating layers of the coils in the case where the jigs are removed after the impregnation curing process of the resin is performed, and therefore it is problematic in that automation of work is difficult. It is also problematic in that an insulation property of the main insulating layers is largely changed depending on a skill of a worker.

Also in the method, disclosed in JP-A-2013-66382 described above, in which the heat shrinkable slot corona protection layer is extended to the part protruded outside from the core, it is possible to provide a main insulating layer with no void or peeling off.

However, it is problematic in that the method in which the heat shrinkable slot corona protection layer is extended to the part protruded outside from the core cannot be applied to a rotating electrical machine coil that does not need to have a slot corona protection layer.

In the case where the method is applied to a rotating electrical machine coil having a slot corona protection layer, the slot corona protection layer is formed by winding the heat shrinkable semiconductivity tape, and therefore it is problematic in that variation in sizes of the corona protection layers after the impregnation curing process of the insulating resin is increased due to variation in heat shrinkable amounts.

The invention has been made in view of the circumstances and an object thereof is to provide a rotating electrical machine coil in which an ununiform bulge of the rotating electrical machine coil protruded outside from the core is suppressed without using a jig or remarkably increasing man-hours.

In order to solve the above problems, a rotating electrical machine coil provided by receiving the rotating electrical machine coil in a core of a rotating electrical machine in the invention and performing impregnation with insulating resin and curing of the insulating resin, includes: a plurality of coil conductors; and an insulating tape wound around the coil conductors a plurality of times to form an insulating layer, in which the insulating layer corresponding to at least a part of the coil conductors protruded from the core is provided so that a part of the wound insulating tape is adhered.

Further, a production method of a rotating electrical machine coil received in a core of a rotating electrical machine in the invention, includes: a first winding step for forming an insulating layer by winding an insulating tape around a plurality of coil conductors at least once; and a second winding step for forming an insulating layer by winding the insulating tape around the insulating layer that has been formed in the first winding step and is a layer in which an adhesive member is applied or attached to at least a part protruded from the core.

Furthermore, a rotating electrical machine in the invention, includes: the rotating electrical machine coil; and a rotating electrical machine core in which the rotating elec-

trical machine coil is received, in which the rotating electrical machine coil and the rotating electrical machine core are impregnated with resin.

According to the invention, it is possible to suppress an ununiform bulge of a rotating electrical machine coil protruded outside from a core, and therefore it is possible to form a rotating electrical machine coil having a main insulating layer with no void or peeling off after impregnation with insulating resin and curing of the insulating resin are performed. Accordingly, a rotating electrical machine to which the rotating electrical machine coil is applied can secure high insulation reliability.

Further, an adhesive member is applied or attached during a winding step of an insulating tape to adhere layers of the insulating tape to each other, and therefore it is possible to apply the invention to both an automatic winding step and a manual winding step of an insulating tape without largely changing a conventional production step.

BRIEF DESCRIPTION OF THE DRAWINGS

FIG. **1** is a schematic cross-sectional view of a rotating electrical machine in this example.

FIG. **2** is a cross-sectional view of a stator slot.

FIG. **3** is a schematic perspective view illustrating progress in which a stator coil in Example 1 is taped with an insulating tape.

FIG. **4** illustrates a cross section in a longitudinal direction of the stator coil having a main insulating layer in Example 1.

FIG. **5** is a schematic perspective view of and around an exit portion of a stator core receiving the stator coil in Example 1.

FIG. **6** is a schematic perspective view illustrating progress in which a stator coil in Example 2 is taped with an insulating tape.

FIG. **7** illustrates a cross section in a longitudinal direction of the stator coil having a main insulating layer in Example 2.

FIG. **8** is a schematic perspective view of and around an exit portion of a stator core receiving the stator coil in Example 2.

FIG. **9** is a schematic perspective view illustrating progress in which a stator coil in Example 3 is taped with an insulating tape.

FIG. **10** illustrates a cross section in a longitudinal direction of the stator coil having a main insulating layer in Example 3.

FIG. **11** is a schematic perspective view of and around an exit portion of a stator core receiving the stator coil in Example 3.

FIG. **12** is a schematic perspective view illustrating progress in which a stator coil in Example 4 is taped with an insulating tape.

FIG. **13** illustrates a cross section in a longitudinal direction of the stator coil having a main insulating layer in Example 4.

FIG. **14** is a schematic perspective view of and around an exit portion of a stator core receiving the stator coil in Example 4.

FIG. **15** is a schematic perspective view illustrating progress in which a stator coil in Example 5 is taped with an insulating tape.

FIG. **16** is a schematic perspective view of and around an exit portion of a stator core receiving the stator coil in Example 5.

DETAILED DESCRIPTION OF THE INVENTION

Embodiments of the invention will be described in detail below with reference to drawings.

A configuration of a rotating electrical machine in this example will be described. FIG. **1** is a schematic cross-sectional view of the rotating electrical machine in this example.

A rotating electrical machine **1** includes a housing **2**, bearings **3**A and **3**B pivotally supporting a rotary shaft **4** of a rotor **5** having a magnetic pole, and a stator **6** facing to the rotor **5** so as to have a void in a circumferential direction of the rotor **5**.

The rotor **5** includes a rotor core **7**R and a rotor coil (winding) **8**R provided to a slot of the rotor core **7**R.

The stator **6** includes a stator core **7** supported by the housing **2** and a stator coil (winding) **8** provided to the stator core **7**.

Note that, in this embodiment, description will be made by using the stator core **7** as a core and the stator coil **8** as a rotating electrical machine coil. However, a technique of this example is also applicable to the rotor **5** including the rotor coil.

FIG. **2** is a cross-sectional view of a stator slot taken along the line B-B' in FIG. **1**.

As illustrated in FIG. **2**, in the stator core **7**, a plurality of slots (winding grooves) **7**G provided from an inner diameter side facing to the rotor **5** toward an outer diameter side over a whole length in a rotary shaft direction of the rotor **5** are formed in the circumferential direction at equal intervals.

Wedge grooves **7**W are formed in opening portions of the slots **7**G. Then, when wedges **9** are inserted into the wedge grooves **7**W, the stator coils **8** provided to the slots **7**G are fixed at two upper and lower stages.

In the stator coil **8**, a coil conductor **13** is formed by gathering a plurality of wire conductors **10** whose wires have been insulated with the use of a well-known insulating material to form an inter-layer insulating layer **11** made of the well-known insulating material, and a main insulating layer **20** is formed by gathering the plurality of coil conductors **13** and winding a well-known insulating tape **21** (not illustrated) such as a dry mica tape around an outer circumference of the coil conductors **13**.

Then, the stator coils **8** are stacked at two upper and lower stages while an intermediate filling **42** made of an insulating material is being inserted therebetween, and, in this state, the stator coils **8** are inserted into the slot **7**G of the stator core **7** via an insulation protective layer **12**. After the stator coils **8** are inserted, the insulation protective layer **12** is stacked to surround the stator coils **8**, and then an under-wedge filling **41** made of an insulating material is stacked thereon, and, after that, the wedge **9** is inserted into the wedge grooves **7**W.

The intermediate filling **42** maintains an interval between the upper and lower stator coils **8** so that the interval has a predetermined insulation size.

The stator core **7** into which the stator coils **8** are inserted is received in a vacuum impregnation vessel thereafter, and vacuum pressure impregnation of insulating resin such as epoxy resin is performed with a well-known procedure, and then gaps in outside and inside of each insulating layer and inside of the slot **7**G are impregnated with the insulating resin. Thereafter, the insulating resin with which the gaps are impregnated is heated and cured. In this way, it is possible to provide the stator coil **8** having a small number of voids

generated in the main insulating layer **20** and having high reliability and a rotating electrical machine to which the stator coil **8** is applied.

A configuration of the stator coil **8** in this example will be described in more detail below.

Example 1

FIG. **3** is a schematic perspective view illustrating progress in which the stator coil **8** is taped with the insulating tape **21**. The stator coil **8** is formed by gathering the plurality of coil conductors **13** and winding the insulating tape **21** around the outer circumference thereof so that about a half of a tape width is overlapped. This process is repeated a plurality of times, and a plurality of layers in which the insulating tape **21** is wound are formed. Thus, the main insulating layer **20** is formed.

Note that, although the cross section of the stator coil **8** in FIG. **3** (the same applies to FIG. **5** described below) and the cross section of the stator coil **8** in FIG. **2** are drawn to have different shapes, the following point is omitted in FIG. **3**: the plurality of wire conductors **10** are gathered and the interlayer insulating layer **11** made of the well-known insulating material is formed, which has been described with reference to FIG. **2**.

As illustrated in FIG. **3**, the wound insulating tape **21** is adhered by continuously applying or attaching an adhesive member **30** in the longitudinal direction of the stator coil **8** between an inner circumference side of the insulating tape **21** that is being wound and an outer circumference side of the insulating tape **21** that has already been wound. The adhesive member **30** can be an arbitrary adhesive member such as a liquid, gel, semisolid, or solid adhesive member.

At this time, a bulge caused by loose winding of the insulating tape **21** is generated more easily as a side surface of the main insulating layer **20** has a larger area. Therefore, FIG. **3** illustrates an example where the adhesive member **30** is applied or attached to an A surface of the stator coil **8**. At this time, when the adhesive member **30** is applied or attached to a C surface to adhere layers of the insulating tape **21** to each other, the bulge of the main insulating layer **20** can be further suppressed.

Moreover, the bulge of the main insulating layer **20** may be further suppressed by applying or attaching the adhesive member **30** to all of A, B, C, and D surfaces of the stator coil **8** and adhering the layers of the insulating tape **21** to each other to prevent loose winding.

FIG. **4** illustrates a cross section in the longitudinal direction of the stator coil **8** having the main insulating layer **20**, which is obtained in the case where the stator coil **8** is received in the slot **7**G of the stator core **7**.

The main insulating layer **20** is formed by the insulating tape **21** such as a mica tape wound around the outer circumference of the coil conductors **13**. Specifically, the main insulating layer **20** has the following five layers: a main insulating layer **20***a* formed by the insulating tape **21** that is wound from an outward direction to an inward direction of the stator core **7** (right to left on the sheet) in a longitudinal direction of the coil conductors **13** so that about the half of a tape width is overlapped; a main insulating layer **20***b* formed by the insulating tape **21** that is wound in a direction opposite to that of the main insulating layer **20***a*; a main insulating layer **20***c* formed by the insulating tape **21** that is wound in a direction same as that of the main insulating layer **20***a*; a main insulating layer **20***d* formed by the insulating tape **21** that is wound in a direction same as that of the main insulating layer **20***b*; and a main insulating layer **20***e* formed by the insulating tape **21** that is wound in a direction same as that of the main insulating layer **20***a*.

Layers of the main insulating layer **20***d* and the main insulating layer **20***e* are adhered to each other with the use of the adhesive member **30**. At this time, the adhesive member **30** is applied or attached to at least a part of the stator coil **8** protruded from the stator core **7**.

With this, a bulge caused by loose winding of the insulating tape **21** is not generated in the main insulating layer **20** of the stator coil **8** that is not restricted by the slot **7**G of the stator core **7**.

As illustrated in FIG. **4**, in the case where the layers of the main insulating layer **20***d* and the main insulating layer **20***e* are adhered to each other with the use of the adhesive member **30**, loose winding of the insulating tape **21** forming the main insulating layer **20***c*, the main insulating layer **20***b*, and the main insulating layer **20***a* can also be suppressed.

Therefore, it is possible to suppress an ununiform bulge of a rotating electrical machine coil protruded outside from a core by adhering at least one layer on an outer layer side in the main insulating layer **20** formed by winding the insulating tape **21** a plurality of times.

Although FIG. **4** illustrates the cross section obtained when the insulating tape **21** is wound reciprocatively, the adhesive member **30** can also be similarly applied or attached when the insulating tape **21** is wound in one direction.

Further, the number of layers of the main insulating layer **20** formed by winding the insulating tape **21** is not limited to five layers, and the insulating tape **21** only needs to be wound to form at least two layers.

Herein, a production method of the stator coil **8** illustrated in FIG. **3** will be described.

Generally, the stator coil **8** is formed by gathering the plurality of coil conductors **13** and then the insulating tape **21** is wound around the stator coil **8** with the use of a taping machine. Then, in the case where the stator coil **8** is received in the slot **7**G of the stator core **7** after the insulating tape **21** is wound a predetermined number of times (to form four layers in FIG. **3**), the adhesive member **30** is applied or attached to a part of the stator coil **8** protruded from the stator core **7**, and then the insulating tape **21** is further wound to form another layer. Note that application or attachment of the adhesive member **30** may be implemented as a step different from a taping step of the insulating tape **21** or a tool for applying or attaching the adhesive member **30** during taping may be operated.

An application or attachment range of the adhesive member **30** may include not only the part protruded from the stator core **7** when the stator coil **8** is received in the stator core **7** but also the outer circumference side of the insulating tape **21** corresponding to a part received in the slot **7**G. In this case, it is possible to prevent a bulge of the main insulating layer **20** in a part from a portion below an end surface of the stator core **7** to a portion protruded therefrom, the part having the greatest influence on an insulate property. Further, in this case, also in the case where the stator coil **8** and the stator core **7** have a large size tolerance, it is possible to securely prevent a bulge of the main insulating layer **20** at the exit portion of the stator core **7**. Furthermore, a sufficient tolerance can be provided as a work tolerance at the time of receiving the stator coil **8** in the stator core **7**.

Herein, a range of the part protruded from the stator core **7**, to which the adhesive member **30** is applied or attached, is a range in which partial discharge does not occur in the

main insulating layer **20** and can be appropriately set in accordance with a configuration of the rotating electrical machine.

FIG. **5** is a schematic perspective view of and around the exit portion of the stator core **7** of the rotating electrical machine receiving the stator coil **8** in this example.

In FIG. **5**, a part of the insulation protective layer **12** of the stator coil **8** is illustrated to be cut out. Further, the stator coil **8** illustrated in FIG. **5** is different from an actual device in that the insulating tape **21** is being wound.

As described above, in the stator coil **8**, the main insulating layer **20** is formed by winding a plurality of layers of the insulating tape **21** around the outer circumference of the plurality of coil conductors **13**. At this time, the adhesive member **30** is continuously applied or attached to at least the part of the stator coil **8** protruded from the stator core **7** in the longitudinal direction, and outer two layers of the insulating tape **21** are adhered to each other with the use of the adhesive member **30**.

As described with reference to FIG. **2**, the stator coil **8** configured as described above is inserted into the slot **7**G of the stator core **7** and is fixed thereto, and, after the stator coils **8** stacked at the two upper and lower stages are inserted into all of the slots **7**G of the stator core **7**, the stator coils **8** are connected.

Thereafter, gaps in the main insulating layer **20** and the slots **7**G are impregnated with insulating resin such as epoxy resin by a vacuum pressure impregnation process or the like and the insulating resin is heated and cured.

With this, impregnation with the insulating resin and curing of the insulating resin are performed while the bulge of the main insulating layer **20** of the stator coil **8** at the exit portion of the stator core **7** is being suppressed. Therefore, it is possible to provide a rotating electrical machine having high insulation reliability.

Example 2

Another example of the configuration of the stator coil **8** will be described with reference to FIG. **6** to FIG. **8**. Note that, in FIG. **6** to FIG. **8**, the same reference signs as those in FIG. **1** to FIG. **5** denote the same components, and therefore repeated description thereof is omitted in some cases.

In Example 1 described above, the following example has been described: the adhesive member **30** is continuously applied or attached in the longitudinal direction of the coil to the outer circumference of the insulating tape **21** that has already been wound, and the inner circumference of the insulating tape **21** that is being wound is adhered to the outer circumference of the insulating tape **21** that has already been wound. In Example 2, the adhesive members **30** are discontinuously applied or attached in the longitudinal direction of the coil to adhere the wound insulating tape **21**.

Description will be made in detail below with reference to the drawings.

FIG. **6** is a schematic perspective view illustrating progress in which a stator coil **81** is taped with the insulating tape **21**. The stator coil **81** is formed by gathering a plurality of coil conductors **131** and winding the insulating tape **21** around an outer circumference thereof so that about a half of a tape width is overlapped. This process is repeated a plurality of times, and a plurality of layers in which the insulating tape **21** is wound are formed. Thus, a main insulating layer **201** is formed.

At this time, as illustrated in FIG. **6**, the wound insulating tape **21** is adhered by discontinuously applying or attaching the adhesive members **30** in a longitudinal direction of the stator coil **81** between the inner circumference side of the insulating tape **21** that is being wound and an outer circumference side of the insulating tape **21** that has already been wound. The adhesive members **30** can be an arbitrary adhesive member such as a liquid, gel, semisolid, or solid adhesive member.

Intervals at which the adhesive members **30** are applied or attached and areas of the adhesive members **30** are appropriately adjusted in accordance with a bulge amount caused by loose winding of the main insulating layer **201**. That is, in the case where the bulge amount is large, the intervals of the adhesive members **30** are reduced, or the areas of the adhesive members **30** are increased to increase an adhesive strength.

Further, as in Example 1, a surface to which the adhesive members **30** are applied or attached can be selected in accordance with an area of a side surface of the main insulating layer **201** in which loose winding of the insulating tape **21** is large. FIG. **6** illustrates an example where the adhesive members **30** are applied or attached to an A surface of the stator coil **81**. However, the adhesive members **30** may be applied or attached to a C surface. Further, the adhesive members **30** may be applied or attached to both the A surface and the C surface. Moreover, a bulge of the main insulating layer **201** caused by loose winding of the insulating tape **21** may be further suppressed by applying or attaching the adhesive members **30** to all of A, B, C, and D surfaces of the stator coil **81** and adhering the layers of the insulating tape **21** to each other.

FIG. **7** illustrates a cross section in the longitudinal direction of the stator coil **81** having the main insulating layer **201**, which is obtained in the case where the stator coil **81** is received in the slot **7**G of the stator core **7**.

The main insulating layer **201** is formed by the insulating tape **21** such as a mica tape wound around the outer circumference of the coil conductors **131**. Specifically, the main insulating layer **201** having five layers of a main insulating layer **201***a*, a main insulating layer **201***b*, a main insulating layer **201***c*, a main insulating layer **201***d*, and a main insulating layer **201***e* is formed by winding the insulating tape **21** five times in the same way as Example 1.

The layers of the main insulating layer **201***d* and the main insulating layer **201***e* are adhered to each other with the use of the adhesive member **30**. At this time, the adhesive member **30** is applied or attached to at least a part of the stator coil **81** protruded from the stator core **7**.

With this, a bulge caused by loose winding of the insulating tape **21** is not generated in the main insulating layer **201** of the stator coil **8** that is not restricted by the slot **7**G of the stator core **7**.

In this example as well as in Example 1, it is possible to suppress an ununiform bulge caused by loose winding of the insulating tape **21** of the rotating electrical machine coil protruded outside from the core by adhering at least one layer on an outer layer side in the main insulating layer **201** formed by winding the insulating tape **21** a plurality of times.

Further, as in this example, the adhesive members **30** are discontinuously applied or attached in the longitudinal direction of the stator coil **81** to adhere the wound insulating tape **21**. Therefore, a use amount of the adhesive member **30** can be reduced and cost reduction can be achieved, as compared with Example 1.

Herein, a production method of the stator coil **81** illustrated in FIG. **6** will be described.

The stator coil **81** is formed by gathering the plurality of coil conductors **131** and then the insulating tape **21** is wound around the stator coil **81** with the use of a taping machine. Then, in the case where the stator coil **81** is received in the slot **7**G of the stator core **7** after the insulating tape **21** is wound a predetermined number of times (four layers in FIG. **6**), the adhesive member **30** is applied or attached to a part of the stator coil **81** protruded from the stator core **7**, and then the insulating tape **21** is further wound to form another layer. Note that application or attachment of the adhesive member **30** may be implemented as a step different from a taping step of the insulating tape **21** or a tool for applying or attaching the adhesive member **30** during taping may be operated.

As in Example 1 described above, the application or attachment range of the adhesive member **30** may include not only the part protruded from the stator core **7** when the stator coil **81** is received in the stator core **7** but also the outer circumference side of the insulating tape **21** corresponding to a part received in the slot **7**G.

Further, a range of the part protruded outside from the stator core **7**, to which the adhesive member **30** is applied or attached, is a range in which partial discharge does not occur in the main insulating layer **201** and can be appropriately set in accordance with the configuration of the rotating electrical machine.

FIG. **8** is a schematic perspective view of and around the exit portion of the stator core **7** of the rotating electrical machine receiving the stator coil **81** in this example.

In FIG. **8**, a part of the insulation protective layer **12** of the stator coil **81** is illustrated to be cut out. Further, the stator coil **81** illustrated in FIG. **8** is different from an actual device in that the insulating tape **21** is being wound.

A configuration of the stator core **7** of the rotating electrical machine receiving the stator coil **81** in this example illustrated in FIG. **8** and an assembly procedure of the stator coil **81** in this example are the same as those in Example 1 illustrated in FIG. **5**, and therefore description thereof is omitted herein.

By applying the stator coil **81** to which this example is applied, impregnation with the insulating resin and curing of the insulating resin are performed while the bulge of the main insulating layer **20** of the stator coil **81** at the exit portion of the stator core **7** is being suppressed. Therefore, it is possible to provide a rotating electrical machine having high insulation reliability.

The adhesive members **30** are discontinuously applied or attached in this example, which is different from Example 1 where the adhesive member **30** is continuously applied or attached. This makes it possible to reduce a use amount of the adhesive member **30**.

Example 3

Another example of the configuration of the stator coil **8** will be described with reference to FIG. **9** to FIG. **11**. Note that, in FIG. **9** to FIG. **11**, the same reference signs as those in FIG. **1** to FIG. **8** denote the same components, and therefore repeated description thereof is omitted in some cases.

In Example 1 described above, the following example has been described: the adhesive member **30** is continuously applied or attached in the longitudinal direction of the coil to the outer circumference of the insulating tape that has already been wound to adhere the outer circumference to the inner circumference of the wound insulating tape **21**. In Example 2, the following example has been described: the adhesive members **30** are discontinuously applied or attached in the longitudinal direction of the coil to adhere to the inner circumference of the wound insulating tape **21**. In this example, in the case where the insulating tape **21** is wound so that about a half of the tape width is overlapped, the adhesive members **30** are inserted into overlapped parts of the tape.

That is, in Examples 1 and 2 described above, the layers of the main insulating layer **20** formed by winding the insulating tape **21** are adhered to each other with the use of the adhesive member **30**, whereas, in this example, the adhesive members **30** are provided inside a layer of the main insulating layer **20** formed by winding the insulating tape **21**.

Description will be made in detail below with reference to the drawings.

FIG. **9** is a schematic perspective view illustrating progress in which a stator coil **82** is taped with the insulating tape **21**. The stator coil **82** is formed by gathering the plurality of coil conductors **13** and winding the insulating tape **21** around the outer circumference thereof so that about a half of a tape width is overlapped. This process is repeated a plurality of times, and a plurality of layers in which the insulating tape **21** is wound are formed. Thus, a main insulating layer **202** is formed.

At this time, as illustrated in FIG. **9**, the adhesive members **30** are applied or attached to the overlapped parts of the insulating tape **21** wound to be overlapped. The adhesive members **30** can be an arbitrary adhesive member such as a liquid, gel, semisolid, or solid adhesive member.

Intervals at which the adhesive members **30** are applied or attached and areas of the adhesive members **30** are appropriately adjusted in accordance with a bulge amount of the main insulating layer **202**. That is, in the case where the bulge amount caused by loose winding of the insulating tape **21** is large, the intervals of the adhesive members **30** are reduced, or the areas of the adhesive members **30** are increased.

Further, as in Examples 1 and 2, a surface to which the adhesive members **30** are applied or attached can be selected in accordance with an area of a side surface of the main insulating layer **202**. FIG. **9** illustrates an example where the adhesive members **30** are applied or attached to an A surface of the stator coil **82** in which loose winding of the insulating tape **21** easily occurs. However, the adhesive members **30** may be applied or attached to a C surface. Further, the adhesive members **30** may be applied or attached to both the A surface and the C surface. Moreover, a bulge of the main insulating layer **202** caused by loose winding of the insulating tape **21** may be further suppressed by applying or attaching the adhesive members **30** to all of A, B, C, and D surfaces of the stator coil **82** and adhering the layers of the insulating tape **21**.

FIG. **10** illustrates a cross section in a longitudinal direction of the stator coil **82** having the main insulating layer **202**, which is obtained in the case where the stator coil **82** is received in the slot **7**G of the stator core **7**.

The main insulating layer **202** is formed by the insulating tape **21** such as a mica tape wound around the outer circumference of the coil conductors **13**. Specifically, the main insulating layer **202** having five layers of a main insulating layer **202***a*, a main insulating layer **202***b*, a main insulating layer **202***c*, a main insulating layer **202***d*, and a main insulating layer **202***e* is formed by winding the insulating tape **21** five times in the same way as Examples 1 and 2.

In the main insulating layer **202***e*, the adhesive member **30** is applied or attached to adhere the overlapped part of the

insulating tape **21** wound to be overlapped, and thus the main insulating layer **202***e* is formed.

At this time, the adhesive member **30** is applied or attached to at least a part of the stator coil **82** protruded from the stator core **7**.

With this, a bulge caused by loose winding of the insulating tape **21** is not generated in the main insulating layer **202** of the stator coil **82** that is not restricted by the slot **7**G of the stator core **7**.

FIG. **10** illustrates the case where the adhesive members **30** are continuously applied or attached to every overlapped part of the insulating tape **21** wound to be overlapped. However, the adhesive members **30** may be applied or attached at intervals, i.e., for example, to every other overlapped part.

In this example, because the overlapped part of the insulating tape **21** of the main insulating layer **202** formed by winding the insulating tape **21** a plurality of times is adhered, the winding strength of the insulating tape **21** can be larger than those in other examples. With this, a bulge of the stator coil **82** caused by loose winding of the insulating tape **21** is not generated.

The above examples are applicable to the case where the insulating tape **21** is wound a plurality of times (the case where a plurality of main insulating layers are formed). However, this example is also applicable to the case where the insulating tape **21** is wound once.

Herein, a production method of the stator coil **82** illustrated in FIG. **9** will be described.

The stator coil **82** is formed by gathering the plurality of coil conductors **13** and then the insulating tape **21** is wound around the stator coil **82** a predetermined number of times (to form four layers in FIG. **9**) with the use of a taping machine. Then, in the case where the next insulating tape **21** is wound, the adhesive member **30** is applied or attached to each overlapped part of the insulating tape **21** wound to be overlapped by using a tool, and the insulating tape **21** is wound around the adhesive members **30**. Thus, the main insulating layer **202** is formed.

At this time, the application or attachment range of the adhesive member **30** may include not only the part protruded from the stator core **7** when the stator coil **82** is received in the slot **7**G of the stator core **7** but also the outer circumference side of the insulating tape **21** corresponding to a part received in the slot **7**G of the stator core **7**.

Further, a range of the part protruded from the stator core **7**, to which the adhesive member **30** is applied or attached, is a range in which partial discharge does not occur in the main insulating layer **202** and can be appropriately set in accordance with the configuration of the rotating electrical machine.

FIG. **11** is a schematic perspective view of and around the exit portion of the stator core **7** of the rotating electrical machine receiving the stator coil **82** in this example.

In FIG. **11**, a part of the insulation protective layer **12** of the stator coil **82** is illustrated to be cut out. Further, the stator coil **82** illustrated in FIG. **11** is different from an actual device in that the insulating tape **21** is being wound.

A configuration of the stator core **7** of the rotating electrical machine receiving the stator coil **82** in this example illustrated in FIG. **11** and an assembly procedure of the stator coil **82** in the example are the same as those in Example 1 illustrated in FIG. **5**, and therefore description thereof is omitted herein.

By applying the stator coil **82** to which this example is applied, impregnation with the insulating resin and curing of the insulating resin are performed while the bulge of the main insulating layer **202** of the stator coil **82** at the exit portion of the stator core **7** is being suppressed. Therefore, it is possible to provide a rotating electrical machine having high insulation reliability.

In this example, the overlapped part of the insulating tape **21** wound to be partially overlapped is adhered, and therefore it is possible to provide adhesion on a side closer to the outer circumference of the main insulating layer **202**, as compared with Embodiments 1 and 2. Accordingly, a bulge of the main insulating layer **202** can be suppressed further effectively. Further, this example is also applicable to the case where the main insulating layer is formed by winding the insulating tape **21** once.

Example 4

Another example of the configuration of the stator coil **8** will be described with reference to FIG. **12** to FIG. **14**. Note that, in FIG. **12** to FIG. **14**, the same reference signs as those in FIG. **1** to FIG. **11** denote the same components, and therefore repeated description thereof is omitted in some cases.

In Examples 1 to 3 described above, the adhesive member **30** is applied or attached to the outer circumference of the insulating tape **21** that has already been wound, and then the insulating tape **21** is wound around the adhesive member **30** to be adhered thereto. This example is different from Examples 1 to 3 in that the adhesive member **30** having a predetermined length is applied or attached to the inner circumference of the insulating tape to be wound and is wound and adhered to be partially overlapped on the insulating tape that has already been wound.

Description will be made in detail below with reference to the drawings.

FIG. **12** is a schematic perspective view of a stator coil **83** in this example, illustrating progress in which the stator coil **83** is taped with the insulating tape **21**. The stator coil **83** is formed by gathering the plurality of coil conductors **13** and winding the insulating tape **21** around the outer circumference thereof so that about a half of a tape width is overlapped. This process is repeated a plurality of times, and a plurality of layers in which the insulating tape **21** is wound are formed. Thus, a main insulating layer **203** is formed.

In the case where the insulating tape **21** in an outermost circumference is wound, the insulating tape **21** to which the adhesive member **30** is continuously applied or attached to inside of the insulating tape **21** in a length direction thereof is wound around the stator coil **83** to be overlapped.

The adhesive member **30** can be an arbitrary adhesive member such as a liquid, gel, semisolid, or solid adhesive member.

FIG. **13** illustrates a cross section in a longitudinal direction of the stator coil **83** having the main insulating layer **203**, which is obtained in the case where the stator coil **83** is received in the slot **7**G of the stator core **7**. Note that FIG. **13** is also referred to in Example 5 described below, and therefore reference signs in Example 5 are also written.

The main insulating layer **203** is formed by the insulating tape **21** such as a mica tape wound around the outer circumference of the coil conductors **13**. Specifically, the main insulating layer **203** having five layers of a main insulating layer **203***a*, a main insulating layer **203***b*, a main insulating layer **203***c*, a main insulating layer **203***d*, and a main insulating layer **203***e* is formed by winding the insulating tape **21** five times.

The main insulating layer **203***e* is formed by winding the insulating tape **21** to which the adhesive member **30** is

continuously applied or attached in a longitudinal direction within a predetermined range on the inside of the insulating tape **21**. Therefore, an overlapped part of the insulating tape **21** is adhered by the adhesive member **30**. Further, the main insulating layer **203***e* is also adhered by the adhesive member **30** to the main insulating layer **203***d* in which the insulating tape **21** has already been wound.

Specifically, the width of adhesion of the overlapped part and the width of adhesion to the main insulating layer **203***d* can be adjusted on the basis of a position and a width of the adhesive member **30** in a width direction of the insulating tape **21**.

At this time, the adhesive member **30** is applied or attached to at least a part of the stator coil **83** protruded from the stator core **7**.

With this, a bulge caused by loose winding of the insulating tape **21** is not generated in the main insulating layer **203** of the stator coil **83** that is not restricted by the slot **7**G of the stator core **7**.

As described above, in this example, the adhesive member **30** is applied or attached to the insulating tape **21** forming the main insulating layer **203** in the outermost circumference.

With this, in the case where the insulating tape **21** is wound around the stator coil **83**, both the overlapped part of the insulating tape **21** and the main insulating layer **203** to which the insulating tape **21** has already been wound are adhered to each other. Therefore, a bulge caused by the insulating tape **21** of the main insulating layer **203** can be prevented more strongly.

Herein, a production method of the stator coil **83** illustrated in FIG. **12** will be described.

The stator coil **83** is formed by gathering the plurality of coil conductors **13** and then the insulating tape **21** is wound around the stator coil **83** a predetermined number of times (to form four layers in FIG. **12**) with the use of a taping machine. Then, a tool for applying or attaching the adhesive member **30** is provided to a supply unit of the insulating tape **21**. Thereafter, the adhesive member **30** is applied or attached to the inside of the insulating tape **21** in the longitudinal direction and the insulating tape **21** is wound around the stator coil **83**. Thus, the main insulating layer **203** is formed.

At this time, the tool for applying or attaching the adhesive member **30** applies or attaches the adhesive member **30** to the insulating tape **21** so that the application or attachment range of the adhesive member **30** is a part protruded from the stator core **7** in the case where the stator coil **83** is received in the stator core **7**. The adhesive member **30** may also be applied or attached to the insulating tape **21** so that the application or attachment range of the adhesive member **30** includes a part received in the slot **7**G of the stator core **7**.

Herein, a range of the part protruded outside from the stator core **7**, to which the adhesive member **30** is applied or attached, is a range in which partial discharge does not occur in the main insulating layer **203** and can be appropriately set in accordance with the configuration of the rotating electrical machine.

The adhesive member **30** is applied or attached in advance to the insulating tape **21** forming the main insulating layer **203** in the outermost circumference, and the insulating tape **21** may be exchanged when taping is performed in the outermost circumference of the main insulating layer **203**.

FIG. **14** is a schematic perspective view of and around the exit portion of the stator core **7** of the rotating electrical machine receiving the stator coil **83** in this example.

In FIG. **14**, a part of the insulation protective layer **12** of the stator coil **83** is illustrated to be cut out. Further, the stator coil **83** illustrated in FIG. **14** is different from an actual device in that the insulating tape **21** is being wound.

A configuration of the stator core **7** of the rotating electrical machine receiving the stator coil **83** in this example illustrated in FIG. **14** and an assembly procedure of the stator coil **83** in the example are the same as those in Example 1 illustrated in FIG. **5**, and therefore description thereof is omitted herein.

By applying the stator coil **83** to which this example is applied, impregnation with the insulating resin and curing of the insulating resin are performed while the bulge caused by loose winding of the insulating tape **21** of the main insulating layer **203** of the stator coil **83** at the exit portion of the stator core **7** is being suppressed. Therefore, it is possible to provide a rotating electrical machine having high insulation reliability.

In this example, both the overlapped part of the wound insulating tape **21** and the main insulating layer in which the insulating tape **21** has already been wound are adhered to each other, and therefore the main insulating layer **203** can be formed more strongly, and a bulge caused by loose winding of the insulating tape **21** of the main insulating layer **203** can be suppressed further effectively.

Further, adhesion is provided over a whole circumference of the stator coil **83** in the circumferential direction thereof, and therefore a bulge of the main insulating layer **203** can be uniformly prevented in the circumferential direction, as compared with Examples 1 and 2.

Example 5

Another example of the configuration of the stator coil **8** will be described with reference to FIG. **15** to FIG. **16**. Note that, in FIG. **15** to FIG. **16**, the same reference signs as those in FIG. **1** to FIG. **14** denote the same components, and therefore repeated description thereof is omitted in some cases.

This example is different from Example 4 in that a main insulating layer **204** is formed by discontinuously applying or attaching the adhesive members **30** having a predetermined length in a tape length direction of the insulating tape **21**.

FIG. **15** is a schematic perspective view of a stator coil **84** in this example, illustrating progress in which the stator coil **84** is taped with the insulating tape **21**. The stator coil **84** is formed by gathering the plurality of coil conductors **13** and winding the insulating tape **21** around the outer circumference thereof so that about a half of a tape width is overlapped. This process is repeated a plurality of times, and a plurality of layers in which the insulating tape **21** is wound are formed. Thus, a main insulating layer **204** is formed.

At this time, the insulating tape **21** to which the adhesive members **30** having a predetermined length are discontinuously applied or attached in a length direction thereof is wound around the stator coil **84** to be overlapped.

The adhesive member **30** can be an arbitrary adhesive member such as a liquid, gel, semisolid, or solid adhesive member.

A cross section of the stator coil **84** of the main insulating layer **204** in the longitudinal direction is the same as that in FIG. **13** illustrating Example 4.

The main insulating layer **204** is formed by the insulating tape **21** such as a mica tape wound around the outer circumference of the coil conductors **13**. Specifically, the main insulating layer **204** having five layers of a main

insulating layer **204***a*, a main insulating layer **204***b*, a main insulating layer **204***c*, a main insulating layer **204***d*, and a main insulating layer **204***e* is formed by winding the insulating tape **21** five times.

The main insulating layer **204***e* is formed by winding the insulating tape **21** to which the adhesive members **30** having a predetermined length are discontinuously applied or attached in the longitudinal direction. As in Example 4, an overlapped part of the insulating tape **21** is adhered by the adhesive member **30**. Further, the main insulating layer **204***e* is also adhered by the adhesive member **30** to the main insulating layer **204***d* in which the insulating tape **21** has already been wound.

Specifically, the width of adhesion of the overlapped part and the width of adhesion to the main insulating layer **204***d* can be adjusted on the basis of a position and a width of the adhesive member **30** in the width direction of the insulating tape **21**.

Further, the adhesive member **30** is applied or attached to at least a part of the stator coil **84** protruded from the stator core **7**.

With this, a bulge is not generated in the main insulating layer **204** of the stator coil **84** that is not restricted by the slot **7**G of the stator core **7**.

The adhesive member **30** may also be applied or attached to the insulating tape **21** so that the application or attachment range of the adhesive member **30** includes a part received in the slot **7**G of the stator core **7**.

Intervals at which the adhesive members **30** having a predetermined length are discontinuously applied or attached in the longitudinal direction and the length of the adhesive members **30** in the longitudinal direction are appropriately adjusted in accordance with a bulge amount caused by loose winding of the insulating tape **21** of the main insulating layer **204**. That is, in the case where the bulge amount is large, the intervals of the adhesive members **30** are reduced, or the areas of the adhesive members **30** are increased.

Further, when the interval of the adhesive members **30** is set to be a winding length in an outer circumference of the main insulating layer **204**, it is possible to obtain a similar effect to that obtained in the case where the adhesive member **30** is applied or attached in the longitudinal direction of the stator coil **84** in the same way as Examples 1 and 2.

As described above, in this example, the adhesive member **30** is applied or attached to the inside of the insulating tape **21** forming the main insulating layer **204** in the outermost circumference. With this, in the case where the insulating tape **21** is wound around the stator coil **84**, both the overlapped part of the insulating tape **21** and the main insulating layer **204** to which the insulating tape **21** has already been wound are adhered to each other. Therefore, a bulge caused by loose winding of the insulating tape **21** of the main insulating layer **204** can be prevented more strongly.

Further, it is possible to adjust an area in which the adhesive member **30** is applied or attached in accordance with a necessary adhesive strength, and therefore an amount of the adhesive member **30** can be reduced and cost reduction can be achieved, as compared with Example 4.

As described above, the stator coil **84** in this example is different from the stator coil **83** in Example 4 in a shape of the adhesive member **30** applied or attached to the insulating tape **21**. Therefore, the stator coil **84** of this example can be produced in the same way as the production method described in Example 4.

FIG. **16** is a schematic perspective view of and around the exit portion of the stator core **7** of the rotating electrical machine receiving the stator coil **84** in this example.

In FIG. **16**, a part of the insulation protective layer **12** of the stator coil **84** is illustrated to be cut out. Further, the stator coil **84** illustrated in FIG. **16** is different from an actual device in that the insulating tape **21** is being wound.

A configuration of the stator core **7** of the rotating electrical machine receiving the stator coil **84** in this example illustrated in FIG. **16** and an assembly procedure of the stator coil **84** in the example are the same as those in Example 1 illustrated in FIG. **5**, and therefore description thereof is omitted herein.

By applying the stator coil **84** to which this example is applied, impregnation with the insulating resin and curing of the insulating resin are performed while the bulge of the main insulating layer **204** of the stator coil **84** at the exit portion of the stator core **7** is being suppressed. Therefore, it is possible to provide a rotating electrical machine having high insulation reliability.

In this example, both the overlapped part formed by winding the wound insulating tape **21** and the main insulating layer **204** in which the insulating tape **21** has already been wound are adhered to each other, and therefore the main insulating layer **204** can be formed more strongly, and the use amount of the adhesive member **30** can be reduced, as compared with Example 4. With this, the bulge of the main insulating layer **204** can be suppressed further effectively.

The invention is not limited to the above examples and includes various modification examples. For example, the above examples have been described in detail to easily understand the invention, and therefore the invention is not necessarily limited to the examples having all the configurations described above. Further, a part of a configuration of a certain embodiment can be replaced with a configuration of another embodiment, and a configuration of another embodiment can also be added to a configuration of a certain embodiment.

REFERENCE SIGNS LIST

7 stator core
8 stator coil
12 insulation protective layer
13 coil conductor
20 main insulating layer
21 insulating tape
30 adhesive member

What is claimed is:

1. A rotating electrical machine coil provided by receiving the rotating electrical machine coil in a core of a rotating electrical machine and performing impregnation with insulating resin and curing of the insulating resin, comprising:

a plurality of coil conductors; and

an insulating tape wound around the coil conductors a plurality of times to form an insulating layer, wherein

the insulating layer corresponding to at least a part of the coil conductors protruded from the core is provided so that a part of the wound insulating tape is adhered,

the insulating tape is adhered directly to an outer circumference side of the insulating layer, and

the insulating tape is adhered between layers of the wound insulating tape.

2. The rotating electrical machine coil according to claim **1**, wherein

the insulating tape is adhered at an overlapped part of the wound insulating tape.

3. The rotating electrical machine coil according to claim **2**, wherein

an adhesive member is provided to inside of the winding insulating tape.

4. The rotating electrical machine coil according to claim **1**, wherein

in the insulating layer corresponding to at least the part of the coil conductors protruded from the core, the insulating tape is continuously adhered in a longitudinal direction of the coil.

5. The rotating electrical machine coil according to claim **1**, wherein

in the insulating layer corresponding to at least the part of the coil conductors protruded from the core, the insulating tape is discontinuously adhered in a longitudinal direction of the coil.

6. The rotating electrical machine coil according to claim **5**, wherein

the insulating tape is discontinuously adhered to have a pitch equal to a winding pitch in a longitudinal direction of the insulating tape.

7. The rotating electrical machine coil according to claim **1**, wherein

in the insulating layer corresponding to at least the part of the coil conductors protruded from the core, the insulating tape is adhered on a side surface having the largest area in a circumferential direction.

8. A rotating electrical machine, comprising:

the rotating electrical machine coil according to claim **1**; and

a rotating electrical machine core in which the rotating electrical machine coil is received, wherein

the rotating electrical machine coil and the rotating electrical machine core are impregnated with resin.

* * * * *