J. McRAE.

ROTARY ENGINE.

APPLICATION FILED JAN. 12, 1912.

1,053,739.

Patented Feb. 18, 1913.

3 SHEETS—SHEET 1.

Fig. 2.

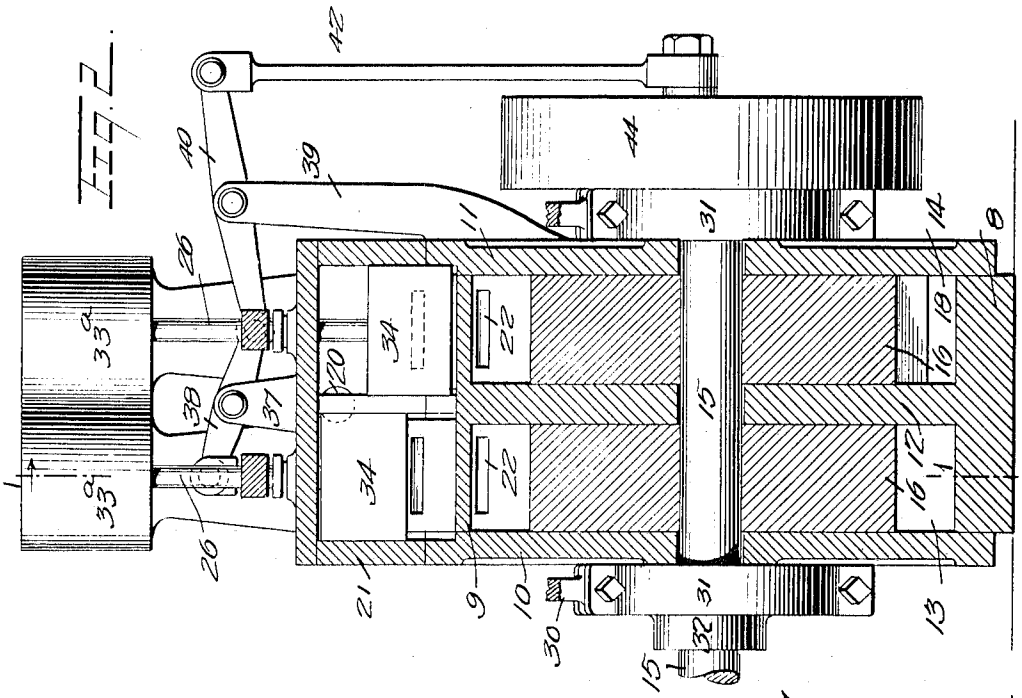

Fig. 1.

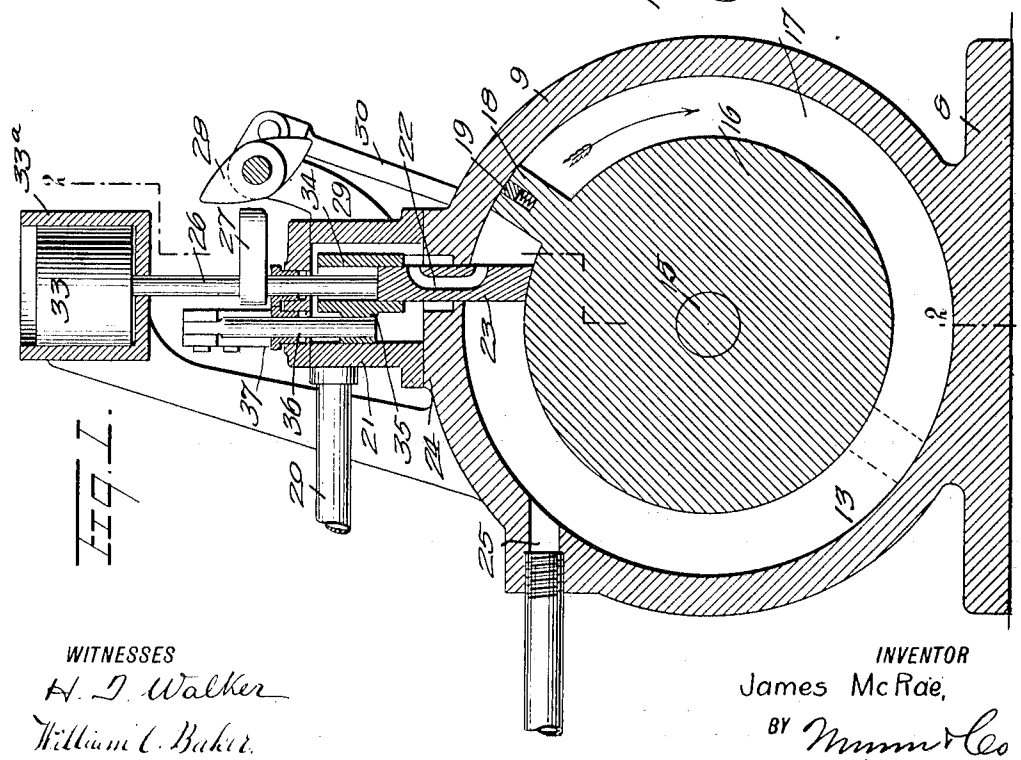

WITNESSES

H. D. Walker

William C. Baker.

INVENTOR

James McRae,

BY Munn & Co

ATTORNEYS

J. McRAE.

ROTARY ENGINE.

APPLICATION FILED JAN. 12, 1912.

1,053,739.

Patented Feb. 18, 1913.

3 SHEETS—SHEET 2.

Fig. 4.

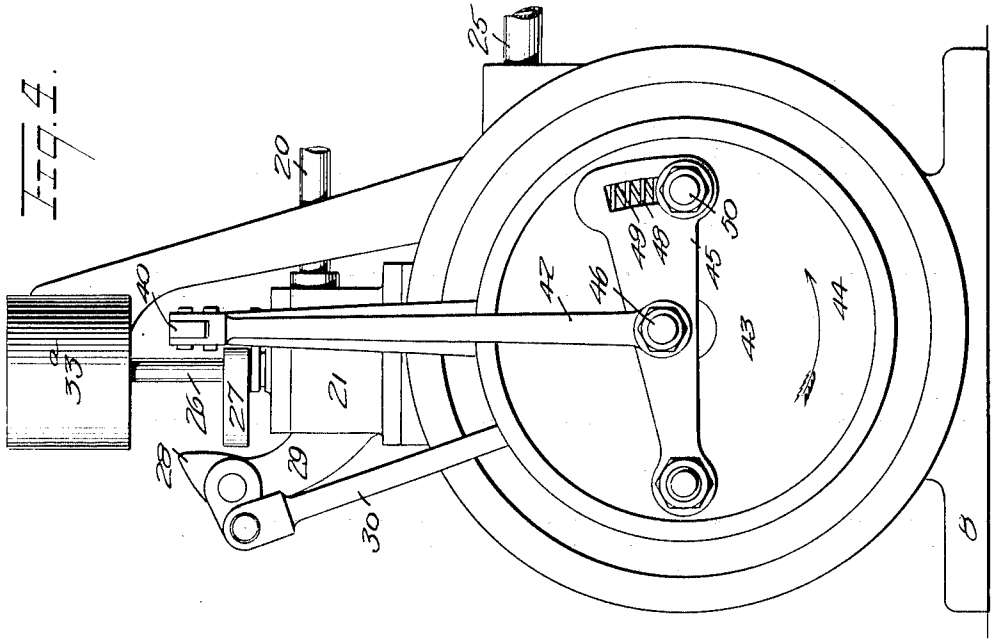

Fig. 3.

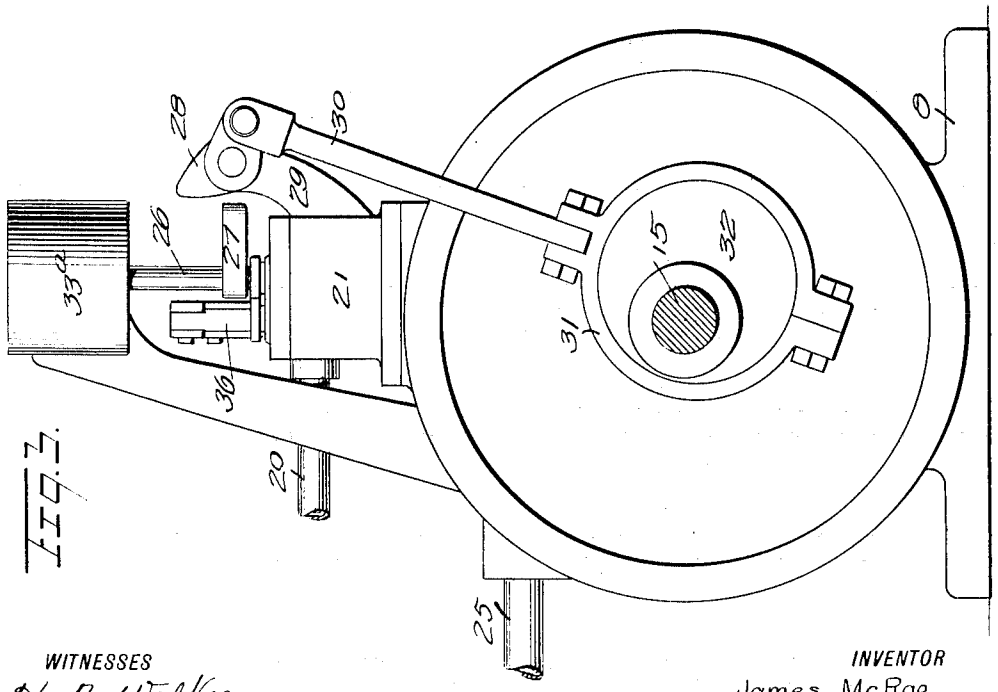

WITNESSES

A. J. Walker

William C Baker

INVENTOR

James McRae,

BY Munn & Co

ATTORNEYS

J. McRAE.

ROTARY ENGINE.

APPLICATION FILED JAN. 12, 1912.

1,053,739. Patented Feb. 18, 1913.

3 SHEETS—SHEET 3.

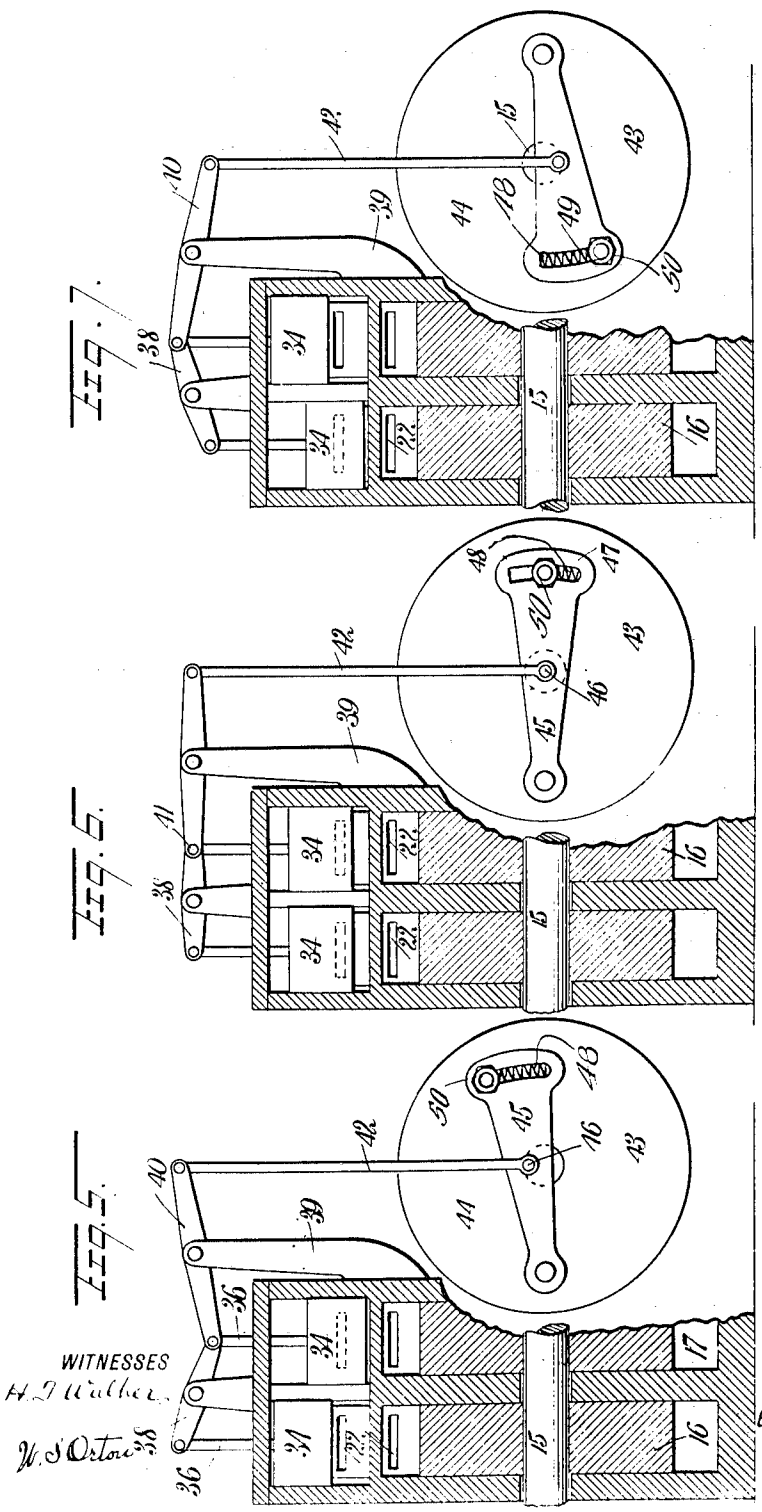

WITNESSES

H. T. Walker

W. S. Orton

INVENTOR

James McRae

BY Munn & Co

ATTORNEYS

UNITED STATES PATENT OFFICE.

JAMES McRAE, OF GREENVILLE, FLORIDA.

ROTARY ENGINE.

1,053,739. Specification of Letters Patent. Patented Feb. 18, 1913.

Application filed January 12, 1912. Serial No. 670,790.

To all whom it may concern:

Be it known that I, JAMES McRAE, a citizen of the United States, and a resident of Greenville, in the county of Madison and State of Florida, have invented a new and Improved Rotary Engine, of which the following is a full, clear, and exact description.

My invention relates to a rotary engine, and particularly relates to the means for controlling the steam inlet valve and to the means for governing the speed of the rotating parts.

An object of my invention is to provide a rotary engine having a steam inlet actuated by the relative position of the piston and the inlet.

A further object of my invention is to provide a positive means for intercepting the passage of the actuating fluid to the engine when the same is running at abnormal speed.

Reference is to be had to the accompanying drawings, forming a part of this specification, in which similar characters of reference indicate corresponding parts in all the figures, and in which—

Figure 1 is a vertical transverse sectional view taken through a preferred embodiment of my invention and on the line 1—1 of Fig. 2, looking in the direction of the arrow; Fig. 2 is a transverse sectional view taken on the irregular line 2—2 of Fig. 1; Fig. 3 is a side elevation of the engine, partly in section, and taken on the line 3—3 of Fig. 2; Fig. 4 is a view similar to Fig. 3, but showing the reverse side of the engine; Fig. 5 is a view, partly diagrammatic and partly in section, showing the steam inlet valves in normal working position, and in this case, showing the left-hand cylinder open to the steam and the right-hand cylinder open to the exhaust; Fig. 6 is a view similar to Fig. 5, but showing both steam inlets closed due to the abnormally high speed of the rotating parts; and Fig. 7 is a view similar to Fig. 5, but showing the valves in their reversed position.

Described more in detail, I have shown in this instance, a rotary engine, comprising a base 8 integral with a cylindrical casing 9, the opposite faces of which casing have heads 10 and 11 thereon. Disposed in the casing and parallel with the heads, is a central partition 12, integral with the casing 9, thereby dividing the device into a left-hand steam chamber 13 and a right-hand steam chamber 14. These chambers and their coacting and containing parts are similar in construction, so that but one of the parts will be described in detail, it being understood that the arrangement is duplicated for each and every chamber.

Centrally extending through the heads 10 and 11 and partition 12, is a freely rotating shaft 15. Rotatably mounted upon the shaft and positioned within each of the steam chambers 13 and 14, is a flat cylindrical piston 16. The piston 16 is concentrically mounted relative to the inner walls of the casing 9 but is spaced from said walls, to form a steam chamber 17, as shown more particularly in Fig. 1. Integrally connected to each of the pistons 16, is a diametrically-extending boss 18, contacting with the inner surface of the casing 9 and so constructed and arranged that steam from the inlet, hereinafter described, will act on the boss, forcing it in the direction of the arrow shown in Fig. 1, thereby rotating the piston 16. If desired, a packing 19 of any suitable construction may be disposed between the inner face of the casing 9 and the outer face of the boss 18. Preferably, in a case where two steam chambers are used, as in the illustration, the boss of one piston is disposed at one hundred and eighty degrees to the other piston, as shown in dotted lines in Fig. 1 and in the unshaded space in Fig. 2.

Steam is admitted through the inlet pipe 20 to a steam chest 21 on the top of the casing 9, and from the steam chest is exhausted through a U-shaped by-pass 22 in a sliding valve 23, which valve is partly disposed within the steam chest 21 and extends through an opening 24 in the casing 9 and bears upon the outer periphery of the piston 16. With the parts in the position shown in Fig. 1, the steam has free admission to act on the boss 18, until the boss passes the exhaust 25, when the steam chamber 17 is opened to the atmosphere. In order to shut off the admission of the steam, there is positioned on an extending rod 26 projecting upwardly from the sliding valve 23, exteriorly of the steam chest, a finger 27, which finger is adapted to be engaged by a cam wheel 28 mounted on a bracket 29 supported from the steam chest 21, which cam wheel is rotated by a reach arm 30, the opposite end of which reach arm 30 is attached to band straps 31 of an eccentric wheel 32,

which eccentric wheel is suitably mounted on the shaft 15, exteriorly of each of the heads 10 and 11. The engagement of the cam 28 is so regulated relative to the position of the boss 18, that the finger 27 together with the valve 23, is raised when the desired amount of steam has been admitted to the chamber 17, and the valve 23 is held in position out of the chamber 17 until the boss 18 has passed the opening 24. In order to prevent the valve 23 from dropping before the boss 18 has passed, there is positioned on the upper end of the rod 26, a plunger 33 moving in an air cylinder 33ª, to form a dash pot. By this outlined construction, it will be noted that the valve 23 will slowly drop into position to engage the periphery of the piston 16, and, at the same time, to permit the influx of steam into the chamber 17.

The admission of steam to the chamber 17 is automatically controlled by the speed of the revolving shaft 15, and I attain this regulation of steam admission by positioning within the steam chest 21 and surrounding the upper portion of the valve 23, a collar 34, projecting from one side of which is a lug 35, which lug has rigidly positioned therein and extending from the steam chest 21, an actuating rod 36, one for each chamber, and, as described in connection with this disclosure, the coupling of two such rods will be described in detail.

Centrally disposed between the two spaced-apart rods 36 and mounted exteriorly of the casing 9, is a bracket 37, pivoted centrally of which bracket is a lever 38 having pivoted to its opposite ends, the outer end of each of the rods 36. Extending from the side of the head 11 is a bracket 39, centrally pivoted to the upper end of which bracket, is a lever 40 having one end pivotally connected at 41, to one arm of the lever 38, the other arm of which lever 40 has pivoted thereto a reach rod 42. Rigidly mounted upon and rotating with the shaft 15 is a heavy fly wheel 44. Pivoted to the outer side of the face of the wheel 44 and off center thereof, is a sector-shaped plate 45 normally extending diametrically of said wheel, the central portion of which plate is pivoted at 46 to the lower end of the reach rod 42. The upper portion 47 of the plate 45 has a slot 48 extending substantially parallel to the periphery of the wheel 44. Mounted within the slot 48 is a compression spring 49, one end of which bears against one end of the slot, and the opposite end of which bears upon a stop pin 50 carried by the face of the wheel 44 and projecting through said slot, the tendency of the spring being to maintain the pivot 46 off-centered from the axis of rotation of the shaft 15.

It will be seen by the above-outlined construction, that the pivotal point 46 describes a path about the circle indicated in full and in dotted lines in Figs. 5 to 7, inclusive. This will cause the reach rod 42 to freely reciprocate, thereby alternately opening and closing the steam inlet 22 of first the right and then the left-hand chamber 17. Referring more particularly to Fig. 5, it will be noted that the rod 42 being at its upper limit of movement, has depressed the collar 34 in the right-hand cylinder and has raised the collar 34 in the left-hand cylinder, thereby permitting the entrance of steam into the left-hand cylinder. Referring more particularly to Fig. 7, it will be noted that the wheel 43 has described one-half a revolution, so that the rod 42 is at its lowermost position of travel, thereby elevating the right-hand collar 34, admitting steam into the right-hand cylinder, and depressing the other collar 34, so as to intercept the admission of steam into the left-hand cylinder.

Should the rotating parts hereinbefore described, attain an abnormally high speed, that is, a speed that would develop a centrifugal force greater than the actuating force of the spring 48, the pivotal point 46 will tend to center itself relative to the rotating wheel 44 so that there will be no reciprocation of the rod 42, and in this position, both of the sleeves 34 are in position to intercept the passage of steam to either of the chambers. The rotating parts will then slow down, the spring 48 will tend to move off center the pivotal point 46, and the alternate admission of steam first into one and then into the other chamber will continue.

Having thus described my invention, I claim as new and desire to secure my Letters Patent:

1. In a rotary engine, a steam chest, a sliding valve reciprocating in said chest, said sliding valve having a rod integral therewith and extending from said steam chest, a finger rigidly mounted upon said rod exteriorly of said chest, and a rotating cam wheel adapted to periodically engage said finger, to raise said sliding valve into an inoperative position.

2. In a rotary engine, a steam chest, a sliding valve reciprocating in said chest and having a by-pass therein, a sleeve telescoping said valve, and means controlled by the speed of the moving parts of the engine, adapted to actuate said sleeve to close communication through said by-pass.

3. In a rotary engine, a casing, a cylindrical piston rotatably mounted in said casing, a sliding valve reciprocating in said casing and adapted to contact with said piston, said sliding valve having a by-pass therein, means for raising said valve out of said casing, and means comprising a dash pot, permitting said valve to be slowly re-positioned on the piston.

4. In a rotary engine, two steam cham-

bers, a steam chest, a steam inlet to said steam chest, a pair of valves in said steam chest, one valve for each chamber, a lever, the opposite ends of which are pivoted to one of said valves, a second lever having one end pivoted to one end of said first-mentioned lever, a rotating governor, and a reach arm connecting said second-mentioned lever with said governor, whereby the rotation of said governor in its normal position will reciprocate said reach rod, to alternately open and close said valves.

5. In a rotary engine, two steam chambers, a steam chest, a pair of valves in the steam chest, each valve having a port, a slidable member for controlling the port of each valve, a pivoted lever, a connection between each end of the lever and a slidable member, a second lever pivotally connected with the first lever, a governor, and a connection between the governor and said second lever.

6. In a rotary engine, two steam chambers, a steam chest, a pair of valves in the steam chest, each valve having a port, means for raising the valves, means for controlling the descent of said valves, a movable member controlling the port of each valve, a governor, and a connection between the governor and said members for controlling the movements of the latter.

7. In a rotary engine, a cylinder, a steam chest on the cylinder, an inlet valve having a port, a member slidable on the valve for controlling the port thereof, and means controlled by the speed of the engine for operating said slidable member.

8. In a rotary engine, a cylinder, a cylindrical piston in the cylinder and provided with a boss engaging the inner wall of the cylinder, a steam chest on the cylinder, an inlet valve slidable in the steam chest and projecting into the cylinder, said valve being provided with a by-pass, means for operating the valve, a member slidable on the valve for controlling the by pass thereof, and means for operating said slidable member.

9. A rotary engine, comprising a casing, a cylindrical piston concentrically mounted within said casing, a steam inlet, comprising a sliding valve normally extending through said casing, to engage the periphery of said piston, said valve having a by-pass therein, the inner end of said by-pass being normally within said casing, means controlled by the rotation of the piston for raising said valve to prevent the entrance of said by-pass into the cylinder, and means independent of the movement of said valve, adapted to close said by-pass when said piston has attained an abnormal speed.

10. In a rotary engine, a cylinder, a steam chest thereon, a shaft, an eccentric wheel mounted on said shaft, a cam, a connection between said eccentric wheel and said cam, adapted to give said cam a rotary movement, an inlet steam valve for controlling the admission of steam into the cylinder, and a finger rigidly mounted on said valve and adapted to be engaged by said cam, whereby the rotation of said shaft will intercept the passage of steam to the engine at a predetermined point in its rotation.

11. In a rotary engine, a cylinder, a steam chest on the cylinder, a valve for admitting steam from the chest into the cylinder, said valve being provided with a laterally projecting finger, a cam wheel adapted to engage the said finger, to raise the valve, a rotating shaft, an eccentric on the shaft, and an arm connecting the eccentric with the cam wheel.

In testimony whereof I have signed my name to this specification in the presence of two subscribing witnesses.

JAMES McRAE.

Witnesses:
JACOB VICKERS,
J. F. GODARD.