Innovation, Sciences et Développement économique Canada
Office de la Propriété Intellectuelle du Canada

Innovation, Science and Economic Development Canada
Canadian Intellectual Property Office

CA 2931576 C 2018/05/29

(11)(21) 2 931 576

(12) BREVET CANADIEN
CANADIAN PATENT

(13) C

(22) Date de dépôt/Filing Date: 2014/02/13

(41) Mise à la disp. pub./Open to Public Insp.: 2014/08/21

(45) Date de délivrance/Issue Date: 2018/05/29

(62) Demande originale/Original Application: 2 898 647

(30) Priorités/Priorities: 2013/02/12 (US13/765,652); 2013/02/13 (US61/764,503); 2013/04/05 (US61/809,281); 2013/06/17 (US61/835,896); 2014/02/12 (US14/179,494)

(51) Cl.Int./Int.Cl. *B64D 11/00* (2006.01), *B60R 5/00* (2006.01), *B64C 1/22* (2006.01)

(72) Inventeurs/Inventors:
SAVIAN, SCOTT, US;
KEARSEY, STEPHEN, GB;
WILLIAMS, COREY, US

(73) Propriétaire/Owner:
C&D ZODIAC, INC., US

(74) Agent: GOWLING WLG (CANADA) LLP

(54) Titre : ENSEMBLE COMPARTIMENT A BAGAGES A PIVOT
(54) Title: PIVOT BIN ASSEMBLY

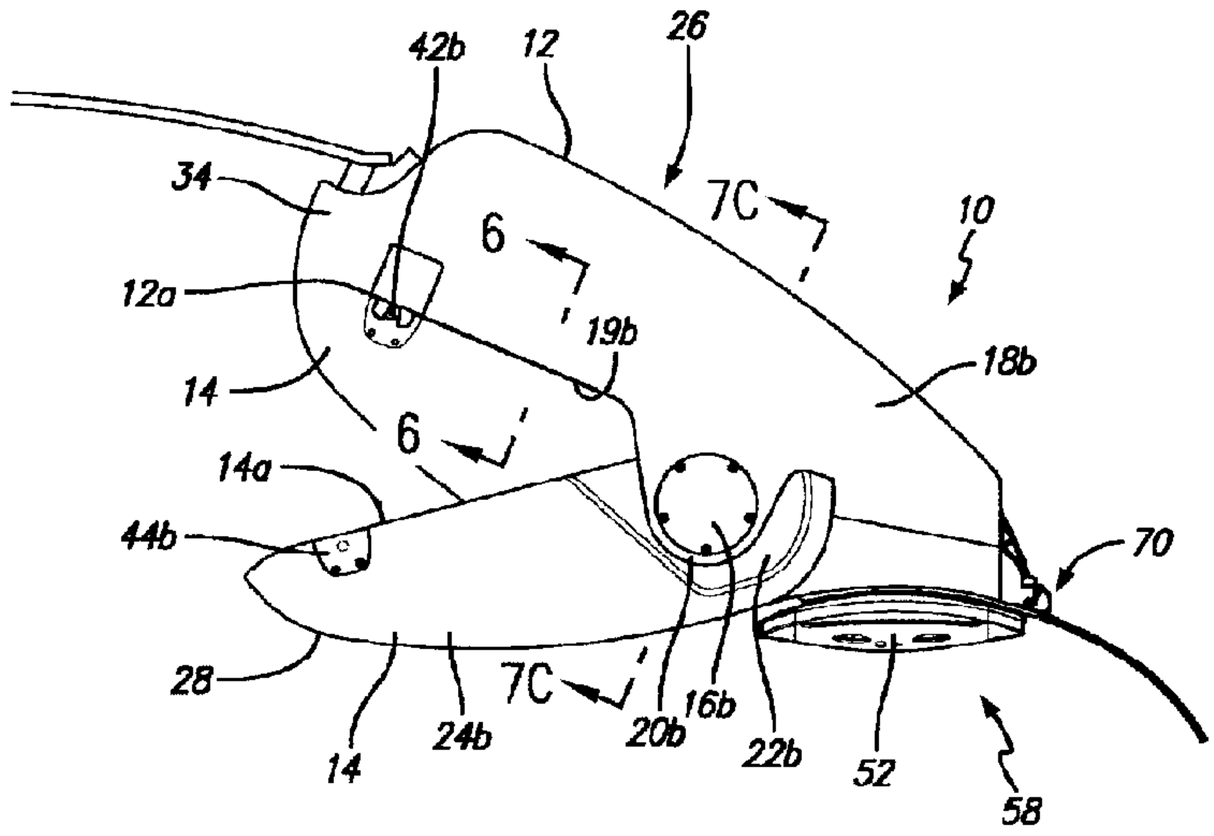

(57) Abrégé/Abstract:
A pivot bin assembly configured to receive luggage and be positioned in the interior of an aircraft. The pivot bin assembly includes an upper housing that includes a strongback and first and second side panels, a bucket that cooperates with the upper housing to define a bin interior, a first pivot mechanism operatively associated with the first side panel and the bucket, and a second pivot mechanism operatively associated with the second side panel and the bucket. The first and second pivot mechanisms are axially aligned along a pivot axis such that the bucket pivots about the pivot axis with respect to the upper housing between an open position and a closed position.

Abstract

A pivot bin assembly configured to receive luggage and be positioned in the interior of an aircraft. The pivot bin assembly includes an upper housing that includes a strongback and first and second side panels, a bucket that cooperates with the upper housing to define a bin interior, a first pivot mechanism operatively associated with the first side panel and the bucket, and a second pivot mechanism operatively associated with the second side panel and the bucket. The first and second pivot mechanisms are axially aligned along a pivot axis such that the bucket pivots about the pivot axis with respect to the upper housing between an open position and a closed position.

PIVOT BIN ASSEMBLY

[0001]

FIELD OF THE INVENTION

[0002] The present invention relates generally to overhead storage bin assemblies, and more particularly to an overhead storage bin assembly that includes a clamshell pivot bin.

BACKGROUND OF THE INVENTION

[0003] Commercial aircraft, such as the Airbus A320 or Boeing 737 are typically constructed from modular components, the size, weight and construction of which are dictated by many considerations, including fuselage dimensions, aesthetic and safety considerations. Many of these requirements are imposed by law or regulation. Aircraft components, such as overhead stowage compartments, seats, lavatories, galleys, lighting systems, etc. are all required to function within strictly confined spaces.

[0004] Manufacturers of aircraft are constantly refining interior aircraft designs to achieve more comfort and utility for passengers and crew within carrier-imposed restraints on cost, weight, maintenance down-time, and safety. Commercial passenger aircraft generally include overhead luggage storage bins mounted from the ceiling, walls or other structural portion of the aircraft over the passenger seats. These bins are designed to accommodate the size, shape, and weight of passenger carry-on luggage.

[0005] Other overhead storage bin assemblies are well known in the art. For example, see U.S. Patent Publication No. 2011/0253837 published October 20, 2011, U.S. Patent No. 4,637,642 issued on January 20, 1987 and U.S. Patent No. 5,567,028 issued on October 22, 1996.

BRIEF DESCRIPTION OF THE DRAWINGS

[0006] FIG. 1 is a side elevational view of two pivot bin assemblies in accordance with a preferred embodiment of the present invention showing a first pivot bin assembly in an open position and a second pivot bin assembly in a closed position;

[0007] FIG. 2 is a perspective view of a portion of an aircraft cabin with a series of pivot bin assemblies installed therein;

[0008] FIG. 3 is a perspective view of the pivot bin assemblies of FIG. 1;

[0009] FIG. 4 is a perspective view of the pivot bin assemblies of FIG . 1 with luggage therein;

[0010] FIG. 5 is a perspective view of the pivot bin assemblies of FIG . 1 with one of the bucket exploded therefrom;

[0011] FIG. 6 is a cross-sectional view taken along line 6 - - 6 of FIG. 1;

[0012] FIG. 7A is a cross-sectional view taken along the same line as FIG. 7A, but showing an alternative embodiment for securing the bucket to the upper housing;

[0013] FIG. 7B is a cross-sectional view of a portion of the pivot bin assemblies of FIG. 1;

[0014] FIG. 7C is a cross-sectional view taken along line 7C--7C of FIG. 1;

[0015] FIG. 8 is a cross-sectional view of one of the pivot bin assemblies of FIG. 1 and showing how a standard piece of luggage fits therein;

[0016] FIG. 9 is a cross-sectional view of one of the pivot bin assemblies of FIG. 1 with the PSU channel omitted;

[0017] FIG. 10 is a cross-sectional view of the a pivot bin assembly with a different valence;

[0018] FIG. 11 is a detailed cross-sectional view showing a rotary damper pivot mechanism providing the pivot point between the side panel and the bucket;

[0019] FIG. 12 is a detailed cross-sectional view showing a pivot axle as the pivot mechanism providing the pivot point between the side panel and the bucket;

[0020] FIG. 13 is an elevational view showing the first latch assembly in the latched position;

[0021] FIG. 14 is an elevational view showing the first latch assembly in the unlatched position;

[0022] FIG. 15 is a cross-sectional view of the first latch assembly in the latched position;

[0023] FIG. 16 is perspective view of a portion of an aircraft cabin showing a plurality of pivot bin assemblies and PSU pods installed therein and showing an empty PSU channel;

[0024] FIG. 17A is a perspective view of the interior of an aircraft showing a series of PSU pod assemblies installed therein with cabin lighting shining upwardly;;

[0025] FIG. 17B is a perspective view of the interior of an aircraft showing a series of PSU pod assemblies installed therein with cabin lighting shining outwardly;

[0026] FIG. 17C is a perspective view of the interior of an aircraft showing a series of PSU pod assemblies installed therein with cabin lighting shining downwardly;

[0027] FIG. 18 is a cross-sectional view of a PSU pod assembly and showing the passenger components and system components;

[0028] FIG. 19A is a side schematic view of a portion of a prior art aircraft showing a series of seats with the passenger components and system components located thereabove in the PSU channel;

[0029] FIG. 19B is an end schematic view of a portion of a prior art aircraft showing a series of seats with the passenger components and system components located thereabove in the PSU channel;

[0030] FIG. 20A is a side schematic view of a portion of an aircraft showing a series of seats with the passenger components and system components located thereabove;

[0031] FIG. 20B is an end schematic view of a portion of an aircraft showing a series of seats with the passenger components and system components located thereabove;

[0032] FIG. 21 is a perspective view of two pivot bin assemblies in accordance with another preferred embodiment of the present invention showing a first pivot bin assembly in an open position and a second pivot bin assembly in a closed position;

[0033] FIG. 22 is a side elevational view of the pivot bin assembly of FIG. 21 with the bucket in the closed position;

[0034] FIG. 23A is a cross-sectional view taken along line 23A-23A of FIG. 22;

[0035] FIG. 23B is a cross-sectional view taken along line 23B-23B of FIG. 22;

[0036] FIG. 23C is a cross-sectional view taken along line 23C-23C of FIG. 22;

[0037] FIG. 23D is a cross-sectional view taken along the same line as 23C-23C of FIG. 22 and showing an embodiment that includes a rotary damper and coil spring;

[0038] FIG. 24 is a side elevational view of the pivot bin assembly of FIG. 21 with the bucket shown in solid lines in the intermediate open position and the bucket shown in dashed lines in the open position;

[0039] FIG. 25A is a side elevational view of the pivot bin assembly of FIG. 21 with the bucket in cross-section and in the open position and the inner and outer plates removed;

[0040] FIG. 25B is a side elevational view of the pivot bin assembly of FIG. 21 with the bucket in cross-section and in the closed position and the inner and outer plates removed;

[0041] FIG. 26 is a side elevational view of the pivot bin assembly of FIG. 21 with the bucket shown in solid lines in the open position and the bucket shown in dashed lines in the intermediate open position;

[0042] FIG. 27 is a side elevational view of the pivot bin assembly of FIG. 21 with the bucket in the open position;

[0043] FIG. 28 is a side elevational schematic view of a connecting unit in accordance with a preferred embodiment of the present invention;

[0044] FIG. 29 is a side elevational schematic view of a connecting unit in accordance with another preferred embodiment of the present invention;

[0045] FIG. 30 is a side elevational view of the pivot bin assembly of FIG. 21 with the bucket in the open position and the inner and outer plates removed to show a connecting unit with powered lift assist;

[0046] FIG. 31 is a side elevational view of a pivot bin assembly with the bucket in the closed position in accordance with another preferred embodiment of the present invention;

[0047] FIG. 32 is a side elevational view of the pivot bin assembly of FIG. 31 with the bucket in the open position;

[0048] FIG. 33 is a perspective view of two pivot bin assemblies of FIG. 31 showing the first pivot bin assembly in an open position and the second pivot bin assembly in a closed position; and

[0049] FIG. 34 is an exploded perspective view of the pivot bin assembly of FIG. 31.

[0050] Like numerals refer to like parts throughout the several views of the drawings.

SUMMARY OF THE PREFERRED EMBODIMENTS

[0051] In accordance with a first aspect of the present invention there is provided a pivot bin assembly that is configured to receive luggage and be positioned in the interior of an aircraft. The pivot bin assembly includes an upper housing that includes a strongback and first and second side panels, a bucket that cooperates with the upper housing to define a bin interior, a first pivot mechanism operatively associated with the first side panel and the bucket, and a second pivot mechanism operatively associated with the second side panel and the bucket. The first and second pivot mechanisms are axially aligned along a pivot axis such that the bucket pivots about the pivot axis with respect to the upper housing between an open position and a closed position. In a preferred embodiment, the bucket includes a bottom and first and second opposing sides, and, when the pivot bin assembly receives luggage in the bin interior, the luggage is positioned on the bottom of the bucket, which bears the load of the luggage. The first and second side panels include a bottom edge and the first and second sides of the bucket include a top edge, and in the closed position, at least a portion of the top edge of the first side of the bucket abuts the bottom edge of the first side panel, and at least a portion of the top edge of the second side of the bucket abuts the bottom edge of the second side panel. Preferably, the bottom of the bucket includes a top edge that abuts a front bottom edge of the strongback when the bucket is in the closed position. The top edge of the bottom and sides of the bucket forms a generally continuous abutment edge that abuts the front bottom edge of the strongback and at least a portion of the bottom edge of the first and second side panels.

[0052] In a preferred embodiment, the pivot bin assembly includes a first clevis assembly that includes a first inner plate and a first outer plate and a second clevis assembly that includes a second inner plate and a second outer plate. The first clevis assembly is secured to and extends downwardly from the first side panel and the second clevis assembly is

secured to and extends downwardly from the second side panel. The first pivot mechanism extends through the first side of the bucket and between the first inner and outer plates and the second pivot mechanism extends through the second side of the bucket and between the second inner and outer plates.

[0053] The pivot bin assembly further includes at least one latch assembly for securing the bucket to the upper housing in the closed position. In a preferred embodiment, the pivot bin assembly includes first and second latch assemblies and the first latch assembly is associated with the first side panel and the first side of the bucket, and the second latch assembly is associated with the second side panel and the second side of the bucket. Preferably, the first latch assembly includes a first hook portion and a first striker portion and the second latch assembly includes a second hook portion and a second striker portion. One of the first hook portion and the first striker portion is associated with the first side panel and the other of the first hook portion and the first striker portion is associated with the first side of the bucket and one of the second hook portion and the second striker portion is associated with the second side panel and the other of the second hook portion and the second striker portion is associated with the second side of the bucket. In a preferred embodiment, the first hook portion extends downwardly from the bottom edge of the first side panel and the first striker portion is positioned in a first recess defined in the top edge of the first side of the bucket, and the second hook portion extends downwardly from the bottom edge of the second side panel and the second striker portion is positioned in a second recess defined in the top edge of the second side of the bucket. In another preferred embodiment, the first hook portion extends upwardly from the top edge of the first side of the bucket and the first striker portion is positioned in a first recess defined in the bottom edge of the first side panel, and the second hook portion extends upwardly from the top edge of the second side of the bucket and the second striker portion is positioned in

a second recess defined in the bottom edge of the second side panel. In a preferred embodiment, the first and second latch assemblies are in electrical communication with an operating member disposed on the bucket.

[0054] Preferably, the first and second pivot mechanisms include first and second rotary dampers associated therewith. The co-axial rotary dampers damp the bucket when it pivots to the open position. Preferably, the first pivot mechanism also includes a first assist spring associated therewith and the second pivot mechanism includes a second assist spring associated therewith. The first and second assist springs are preloaded when the bucket is pivoted to the open position. In a preferred embodiment, the first assist spring is a coil spring that is co-axial with the first pivot mechanism.

[0055] In a preferred embodiment, the upper housing includes a passenger service unit ("PSU") channel integral therewith that is positioned adjacent to the bucket. Preferably, the PSU channel includes at least a first PSU pod extending downwardly therefrom. The upper housing includes first and second rails, and the PSU pod extends downwardly from a panel that includes first and second connectors that are secured to the first and second rails, respectively. Preferably, the PSU channel includes systems components disposed therein, and the PSU pod includes passenger components disposed therein. In a preferred embodiment, the upper housing includes an ECS channel integral therewith that is separate from the PSU channel.

[0056] In a preferred embodiment, the pivot bin assembly includes a first connecting unit having a first end pivotally connected to the first side of the bucket and a second end pivotally connected to the first side panel and a second connecting unit having a first end pivotally connected to the second side of the bucket and a second end pivotally connected to the second side panel. The first and second connecting units provide one or both of damping when the bucket pivots to the open position and/or assistance when the bucket

pivots to the closed position. Preferably, the first side panel defines a cut out in which the first connecting unit is positioned and the second side panel defines a cut out in which the second connecting unit is positioned. In an embodiment that includes the first and second clevis assemblies, the first connecting unit is positioned between the first inner plate and the first outer plate and the second connecting unit is positioned between the second inner plate and the second outer plate.

[0057] In a preferred embodiment, the pivot bin assembly can fit therein four pieces of standard luggage. Each piece of standard luggage includes a top, a bottom, a front, a back and two sides and the four pieces of standard luggage are received in the bin interior and positioned such that one of the two sides of each piece of standard luggage is resting on the bucket bottom when the bucket is in the closed position. In a preferred embodiment, the bucket is made of a single piece that is created or formed on a mold in a single operation. Preferably, the bucket defines a lower portion of the bin interior and the upper housing defines an upper portion of the bin interior. In a preferred embodiment, the bottom of the bucket includes a closing channel defined in an outer surface thereof, and the closing channel includes a closing surface. Preferably, the bottom of the bucket includes a luggage indentation defined in an inner surface thereof.

[0058] In accordance with another aspect of the present invention there is provided a pivot bin assembly that is configured to receive luggage and be positioned in the interior of an aircraft. The pivot bin assembly includes an upper housing that includes a strongback and first and second side panels, a bucket that cooperates with the upper housing to define a bin interior and is pivotally connected to the upper housing such that it pivots about a pivot axis with respect to the upper housing between an open position and a closed position. The bucket includes a bottom and first and second sides. The pivot bin assembly also includes first and second latch assemblies. The first latch assembly is associated with the first side

panel and the first side of the bucket, and the second latch assembly is associated with the second side panel and the second side of the bucket.

[0059] In accordance with another aspect of the present invention there is provided a pivot bin assembly that includes an upper housing that includes a strongback and first and second side panels and a bucket that includes a bottom and first and second sides and that cooperates with the upper housing to define a bin interior. The bucket is operably associated with the upper housing and is movable with respect to the upper housing between a first position where the bucket is closed, a second position where the bucket is partially open and a third position where the bucket is fully open. The pivot bin assembly also includes at least one latch assembly for latching the bucket to the upper housing in the closed position. The bucket is damped when it moves from the first position to the second position, and at least a first assist spring is preloaded when the bucket moves from the second position to the third position. In a preferred embodiment, when the bucket is unlatched from the upper housing, the bucket moves from the first position to the second position by gravity (as used herein "gravity" means the earth's gravity). The first assist spring maintains the bucket in the second position when the bucket is empty, and when a force greater than gravity is placed on the bucket, the bucket moves from the second position to the third position. When the bucket is not empty the first assist spring reduces the force required by a user to move the bucket from the third position to the second position than if the first assist spring was not present.

[0060] In a preferred embodiment, the bucket is pivotally connected to the upper housing and pivots about a pivot axis with respect to the upper housing between the first, second and third positions, and the pivotal connection between the bucket and the upper housing includes first and second pivot axles. Preferably, the first assist spring is a coil spring that is co-axial with one of the first or second pivot axles and at least one of the first and second

pivot axles includes a rotary damper co-axial therewith that damps the bucket when the bucket moves from the first to the second position.

[0061] In a preferred embodiment, the pivot bin assembly includes a first connecting unit having a first end pivotally connected to the first side of the bucket and a second end pivotally connected to the first side panel and a second connecting unit having a first end pivotally connected to the second side of the bucket and a second end pivotally connected to the second side panel. Preferably, the first assist spring is associated with the first connecting unit and at least one of the first and second connecting units damp the bucket when it moves from the first position to the second position.

[0062] In accordance with another preferred embodiment of the present invention, there is provided a pivot bin assembly that includes an upper housing that includes a strongback and first and second side panels, a first clevis assembly that includes at least one of a first inner plate and a first outer plate and that is secured to and extends downwardly from the first side panel, a second clevis assembly that includes at least one of a second inner plate and a second outer plate and that is secured to and extends downwardly from the second side panel, a bucket that includes a bottom and first and second sides and cooperates with the upper housing to define a bin interior, a first pivot axle operatively associated with the bucket and the first clevis assembly, and a second pivot axle operatively associated with the bucket and the second clevis assembly. The first and second pivot axles are axially aligned along a pivot axis, and the bucket pivots about the pivot axis with respect to the upper housing between an open position and a closed position. In a preferred embodiment, the pivot bin assembly includes a first connecting unit having a first end pivotally connected to the first side of the bucket and a second end pivotally connected to the first side panel, and a second connecting unit having a first end pivotally connected to the second side of the bucket and a second end pivotally connected to the second side panel.

The first and second connecting units provide one or both of damping when the bucket pivots to the open position and assistance when the bucket pivots to the closed position. Preferably, the first clevis assembly includes both the first inner plate and the first outer plate and the first pivot axle extends between the first inner plate and the first outer plate. Preferably, the second clevis assembly includes both the second inner plate and the second outer plate and the second pivot axle extends between the second inner plate and the second outer plate. Preferably, the first connecting unit is positioned between the first inner plate and the first outer plate and the second connecting unit is positioned between the second inner plate and the second outer plate. In a preferred embodiment, at least one of the first or second pivot axles includes an assist spring associated therewith, and the assist spring is preloaded when the bucket is pivoted to the open position. In this embodiment, in use, the empty bucket rests in a partially open position. When a user pulls down on the bucket and overcomes the spring force, the spring is preloaded. If the user lets go without placing any luggage in the bucket, it will spring back to the partially open position. If the user places enough luggage/weight in the bucket to overcome the spring force, the bucket will remain in the fully open position.

[0063] In accordance with another aspect of the present invention, there is provided a dual pivot bin assembly that includes first and second pivot bin assemblies as described above positioned adjacent one another, but that include a common strongback.

[0064] In accordance with another aspect of the present invention, there is provided an aircraft that comprises a cabin having a side wall, and that has at least first and second of the pivot bin assemblies described above that are connected to the side wall.

[0065] In accordance with another aspect of the present invention, there is provided a pivot bin assembly that is configured to receive luggage and be positioned in the interior of an aircraft. The pivot bin assembly includes an upper housing that includes first and second

side panels and a strongback that includes an integral PSU channel formed therewith, a bucket that cooperates with the upper housing to define a bin interior, a first pivot mechanism operatively associated with the first side panel and the bucket, and a second pivot mechanism operatively associated with the second side panel and the bucket. The bucket pivots about the pivot axis with respect to the upper housing between an open position and a closed position. In a preferred embodiment, the strongback includes first and second rails that, when the pivot bin assembly is positioned in an aircraft, extend generally parallel to a longitudinally extending axis of the aircraft, and the pivot bin assembly includes at least one panel that is connected to the first and second rails and partially defines the PSU channel. Preferably, the at least one panel includes a PSU pod extending downwardly therefrom that includes reading lights disposed therein and has cabin lighting associated therewith.

[0066] In a preferred embodiment, the pivot bin assembly includes a system that provides a means for an airline customer or flight attendant to close an opened bucket with minimal force, and also provide the means for a fully loaded closed bin bucket to open in a controlled manner.

[0067] In a preferred embodiment, the pivot bin assembly includes at least one rotary damping mechanism. For example, the rotary damping mechanism can be that taught in U.S. Patent Pub. No. 2013/0207529 (the "'529 publication"). In another embodiment, the rotary damping mechanism can be the rotary damper taught in U.S. Patent Pub. No. 2013/0209221 (the "'221 publication"). Preferably, the rotary damping mechanism also includes spring assistance over at least one direction of the rotational travel of the device (e.g., closing of the bucket). The spring assistance can be limited to a portion of the entire range of travel of the pivoting bucket or over the entire range of travel.

It will be appreciated by those of ordinary skill in thc art that this eases the force required by a passenger to close the bucket.

[0068] In a preferred embodiment, the lifting force applied through part of the travel of thc bucket rotation is achieved through the inclusion of a spring feature associated with the rotary damping mechanism and/or the pivot mechanism. The spring feature is oriented such that compression occurs during all or part of thc range of travel of the bucket. While the bucket is open, the spring is preloaded to provide the load assist. This can be advantageous particularly at the beginning of the range of motion of the bucket as hand loads for a passenger closing the bucket are typically highest at this point.

DETAILED DESCRIPTION OF THE PREFERRED EMBODIMENTS

[0069] Thc following description and drawings are illustrative and are not to be construed as limiting. Numerous specific details are described to provide a thorough understanding of the disclosure. However, in certain instances, well-known or conventional details are not described in order to avoid obscuring the description. References to one or an embodiment in the present disclosure can bc, but not necessarily are references to the same embodiment; and, such references mean at least one of the embodiments.

[0070] Reference in this specification to "one embodiment" or "an embodiment" means that a particular feature, structure, or characteristic described in connection with the embodiment is included in at least one embodiment of the-disclosure. The appearances of the phrase "in one embodiment" in various places in the specification are not necessarily all referring to the same embodiment, nor are separatc or altcrnative embodiments mutually exclusive of other embodiments. Moreover, various features are described which may be exhibited by some embodiments and not by others. Similarly, various requirements are described which may be requirements for some embodiments but not other embodimcnts.

[0071] The terms used in this specification generally have their ordinary meanings in the art, within the context of the disclosure, and in the specific context where each term is used. Certain terms that are used to describe the disclosure are discussed below, or elsewhere in the specification, to provide additional guidance to the practitioner regarding the description of the disclosure. For convenience, certain terms may be highlighted, for example using italics and/or quotation marks: The use of highlighting has no influence on the scope and meaning of a term; the scope and meaning of a term is the same, in the same context, whether or not it is highlighted.

[0072] It will be appreciated that the same thing can be said in more than one way. Consequently, alternative language and synonyms may be used for any one or more of the terms discussed herein. No special significance is to be placed upon whether or not a term is elaborated or discussed herein. Synonyms for certain terms are provided. A recital of one or more synonyms does not exclude the use of other synonyms. The use of examples anywhere in this specification including examples of any terms discussed herein is illustrative only, and is not intended to further limit the scope and meaning of the disclosure or of any exemplified term. Likewise, the disclosure is not limited to various embodiments given in this specification.

[0073] Without intent to further limit the scope of the disclosure, examples of instruments, apparatus, methods and their related results according to the embodiments of the present disclosure are given below. Note that titles or subtitles may be used in the examples for convenience of a reader, which in no way should limit the scope of the disclosure. Unless otherwise defined, all technical and scientific terms used herein have the same meaning as commonly understood by one of ordinary skill in the art to which this disclosure pertains. In the case of conflict, the present document, including definitions, will control.

[0074] It will be appreciated that terms such as "front," "back," "top," "bottom," "side," "short," "long," "up," "down," "aft," "forward," "inboard," "outboard" and "below" used herein are merely for ease of description and refer to the orientation of the components as shown in the figures. It should be understood that any orientation of the components described herein is within the scope of the present invention.

[0075] Referring now to the drawings, wherein the showings are for purposes of illustrating the present invention and not for purposes of limiting the same, FIGS. 1-16 show a pivot bin assembly 10. In particular, the invention can be used on commercial passenger aircraft. However, this is not a limitation on the present invention and the pivot bin assembly can be used elsewhere.

[0076] The present invention pivot bin assembly 10 employs a "clamshell design." In a preferred embodiment, the pivot bin assembly 10 allows as much of the entire volume inside the bin as possible to be used, increasing volume and baggage capacity when compared to the prior art. The design and structure also provides a way to integrate systems such as environmental control system ("ECS") ducting and electrical.

[0077] As will be appreciated by those skilled in the art, within the cabin of an aircraft, overhead stowage bins are typically secured to attachment points, such as hard points and overhead and side attachments. Accordingly, a description of the attachment of the pivot bin assembly will be omitted.

[0078] FIGS. 1-16 show a dual pivot bin assembly that is essentially two pivot bin assemblies 10 with a common strongback 12 and that can be installed together in the cabin of an aircraft. However, it will be understood by those of ordinary skill in the art, that a single and separate pivot bin assembly 10 with a single strongback 12 is within the scope of the present invention and is described and claimed herein. In another embodiment, more than two or multiple pivot bin assemblies 10 can include a common strongback 12.

The figures show pivot bin assemblies 10 that are positioned outboard on the aircraft. However, it will be appreciated, that the pivot bin assembly 10 can be used inboard on a wide body aircraft. For example, two sets of back to back outboard facing pivot bin assemblies 10 can include a common strongback 12.

[0079] In a preferred embodiment, the pivot bin assembly 10 includes the strongback 12, a tray or bucket 14 with a first and a second pivot mechanism or pivot axle 16a and 16b on each side, and first and second side panels 18a and 18b. With respect to each pivot bin assembly 10, the strongback 12 and first and second side panels 18a and 18b are referred to herein together as the upper housing 26. Generally, the pivot bin assembly 10 includes the upper housing 26, which includes the strongback 12 and the first and second side panels 18a and 18b, and the bucket 14. The bucket 14 and upper housing 26 cooperate to define a bin interior 36. In a preferred embodiment, the bucket 14 defines the lower portion of the bin interior 36 and the upper housing defines the upper portion of the bin interior 36. It will be appreciated that because the pivot bin assembly includes two sides that each have a pivot mechanism and associated components. Throughout the description, many of the components are denoted as a "first" component with an "a" and as a "second" component with a "b". However, because many of the components are structurally the same, in some portions of the specification and drawings, the "a" and "b" are omitted. For example, the first and second pivot mechanisms/axles are denoted as "16a" and "16b". In some portions of the specification and drawings, the pivot mechanism/axle may be denoted generally as "16".

[0080] In the embodiment shown in the figures, the strongback 12 and first and second side panels 18a and 18b are separate components. However, in another embodiment, the strongback 12 and first and second side panels 18a and 18b (the upper housing 26) can be a unitary component. In a preferred embodiment, the pivot bin assembly 10 includes a

single piece bucket 14 that includes a bottom 28 and first and second opposing sides 24a and 24b. In another embodiment, the bucket 14 can include multiple pieces, e.g., a three piece design that includes the bottom 28 and first and second opposing sides 24a and 24b as separate components. It will be appreciated by those of ordinary skill in the art that the bucket 14 and upper housing 26 provide a "clamshell design," where at least a portion of the bottom edge 19a of the first side panel 18a and the bottom edge 19b of the second side panel 18b and the front bottom edge 12a of the strongback 12 meet edge to edge with or abut the top edge 14a of the bucket 14. In a preferred embodiment, in the closed position, other than the rear top edge 28b of the bottom 28 of the bucket 14 and the area adjacent thereto and the strongback 12 (see FIG. 8), there is little to no overlap between the bucket 14 and the upper housing 26. In the embodiment shown in FIG. 1, other than the localized overlap between the first and second ears 20a and 20b and the first and second indented portions 22a and 22b, in the closed position, there is no overlap between the first and second side panels 18a and 18b and the first and second sides 24a and 24b of the bucket 14. In other words, in a preferred embodiment, the bucket 14 does not enter the upper portion of the bin interior 36, which is defined by the upper housing 26, when the bucket 14 is pivoted to the closed position. It will be appreciated by those skilled in the art, that not only does this increase stowage volume and reduce weight by eliminating redundant paneling, but also significantly decreases the number of parts needed for the entire pivot bin assembly 10, compared to the prior art. As shown in the figures, the strongback 12 can include an integral valence 34 for lighting, ducting and/or other system components that can be generally hidden from passenger view. In a preferred embodiment, the valence 34 is formed as a unitary portion of the strongback 12. However, this is not a limitation on the present invention and the valence 34 can be omitted or be a separate component.

[0081] When the bucket 14 is pivoted to the closed position, the first and second sides 24a and 24b of the bucket 14 are not received in the upper portion of the bin interior 36. In other words, in the portion of the first and second side panels 18a and 18b that do not include the first and second ears 20a and 20b and first and second indented portions 22a and 22b, the first and second top edges 25a and 25b do not pass or overlap with the first and second bottom edges 19a and 19b when the bucket 14 is pivoted to the closed position. Preferably, the first and second top edges 25a and 25b and first and second bottom edges 19a and 19b abut one another. However, an embodiment is possible where the first and second top edges 25a and 25b and first and second bottom edges 19a and 19b are horizontally separated from one another, but, in a vertical direction, the first and second top edges 25a and 25b do not pass or overlap with the first and second bottom edges 19a and 19b when the bucket 14 is pivoted to the closed position.

[0082] In a preferred embodiment, the strongback 12, bucket 14 and first and second side panels 18a and 18b are made out of crush-core panel. However, this is not a limitation on the present invention and other materials can be used. In an exemplary embodiment, the single piece bucket 14 is made using crush core match metal molding. This creates a continuous composite structure with a C-frame cross section that can be made from a single mold. The continuous piece acts as a structural I-beam. However, this structure is not a limitation on the present invention.

[0083] As shown in FIGS. 1-12, generally, first and second side panels 18a and 18b include first and second pivot mechanisms 16a and 16b that are operatively associated with the bucket 14, and allow the bucket 14 to pivot with respect to the upper housing 26 between an open position and a closed position. Any type of pivot mechanism that allows the bucket 14 to pivot with respect to the upper housing 26 is within the scope of the present invention. For example, the first and second pivot mechanisms 16a and 16b can be pivot

axles, as shown in FIG. 12. It will be appreciated that the first and second pivot mechanisms 16a and 16b or axles pivot or rotate about a pivot axis. In a preferred embodiment, the first and second pivot mechanisms 16a and 16b are axially aligned such that the pivot axles rotate about the same axis A1, as shown in FIGS. 7C and 8.

[0084] In a preferred embodiment, the first side panel 18a includes a first ear 20a and the second side panel 18b includes a second ear 20b extending downwardly therefrom. The first and second ears 20a and 20b mate with or are received in first and second indented portions 22a and 22b that are formed in the first and second sides 24a and 24b of the bucket 14. As shown in the figures, preferably, the first and second indented portions 22a and 22b extend inwardly into the interior of the bucket 14. However, in another embodiment, the indented portions can extend outwardly. Furthermore, in another embodiment, the ears can extend upwardly from the bucket and the indented portions can be defined inwardly or outwardly on the side panels of the upper housing.

[0085] In a preferred embodiment, the first side panel 18a, first ear 20a and the first side 24a of the bucket 14 (other than the first indented portion 22a) all are positioned in a generally common plane P1 (see FIG. 6). Likewise, the second side panel 18b, second ear 20b and the second side 24b of the bucket 14 (other than the second indented portion 22b) all are positioned in a generally common plane. In another embodiment, the first and second ears 20a and 20b can be part of the bucket 14 and the first and second indented portions 22a and 22b can be defined in the first and second side panels 18a and 18b.

[0086] As discussed above, and as shown in FIGS. 6 and 8, in a preferred embodiment, in the closed position, the bottom edges of the first and second side panels 18a and 18b abut the top edges 25a and 25b of the first and second sides 24a and 24b of the bucket 14 (FIG. 6) and the front bottom edge 12a of the strongback 12 abuts the front top edge 28a of the bottom 28 of the bucket 14 (FIGS. 8 and 14). It will be appreciated that the front bottom

edge 12a of the strongback can include the valence 34. In other words, as used herein, front bottom edge 12a is the open edge that is abutted by the bucket 14, whether it actually is the strongback, valence or a panel extending from the strongback. As is also shown in FIGS. 8 and 14, the bottom 28 of they bucket 14 includes a rear top edge 28b that is positioned adjacent to but does not abut a rear bottom edge 12b of the strongback 12. This allows a portion of the bottom 28 of the bucket to overlap with the strongback 12 when the bucket 14 pivots to the open position. It will be appreciated by those skilled in the art that in a commercial embodiment, the bucket and/or upper housing may include edge trim, seals or the like that cover the top edges of the bucket or the bottom edges of the upper housing. However, this is not a limitation on the present invention and any such components are considered part of the upper housing or bucket for purposes of the claims appended hereto. For example see the trim 13 shown in FIGS. 23A and 23B. In a preferred embodiment, the pivot bin assembly 10 includes at least one stop member 15 (and preferably a plurality of stop members) positioned within the bin interior 36 and that maintain the bucket 14 in the open position and prevents it from pivoting too far. Any type of stop member 15 is within the scope of the present invention. For example, as shown in FIG. 3, the stop member 15 can abut the angled top edge 14b of the back of the bucket 14 and/or the rear top edge 28b of the bottom 28 of the bucket 28. The stop member 15 can be a separate component or be built in to the upper housing 26 (e.g., a ledge).

[0087] In a preferred embodiment, the first pivot mechanism 16a extends between the first ear 20a and the first side 24a of the bucket 14 and the second pivot mechanism 16b extends between the second ear 20b and second first side 24b of the bucket 14. As discussed above, the first and second pivot mechanisms can be pivot axles on which the bucket 14 can rotate. As shown in FIGS. 5-6 and 7B-7C, a portion of the first pivot mechanism 16a can be positioned in corresponding openings 32a and 33a in the first ear 20a and first side

24a, respectively, and a portion of the second pivot mechanism 16b can be positioned in corresponding openings 32b and 33b in the second ear 20b and second side 24b, respectively. In another embodiment, a pivot axle can extend from the bucket and into an opening in the ear or vice versa. Any pair of pivot mechanisms that are axially aligned and that allow the bucket 14 to pivot with respect to the upper housing 26 is within the scope of the present invention.

[0088] As shown in FIG. 11, in a preferred embodiment, the first and second pivot mechanisms comprise first and second rotary dampers 17a and 17b. With respect to the first rotary damper 17a, one of the housing 19 or the axle 21 is secured within opening 32a and the other is secured within opening 33a. With respect to the second rotary damper 17b, one of the housing 19 or the axle 21 is secured within opening 32b and the other is secured within opening 33b. It will be appreciated that FIG. 11 only shows the first rotary damper 17a, but that second rotary damper 17b is a mirror image thereof. The first and second rotary dampers 17a and 17b can include covers 23 to secure them in place.

[0089] It will be understood that the first and second rotary dampers 17a and 17b provide the ability to damp or control the descent or pivoting of the bucket when it pivots to the open position. In a preferred embodiment, the first and second rotary dampers are either of the rotary dampers taught in the '529 publication or the '221 publication. In another embodiment, each of the first and second side panels 18a and 18b can include a cover 23 positioned on the outside or the inside of the bin interior 36 and that secures the first and second side panels 18a and 18b to the bucket 14 and that covers and houses the first and second pivot mechanism 16a and 16b. It will be appreciated that any type of power assist (for raising or lowering the bucket) or damper is within the scope of the present invention. For example, the present invention can utilize a prior art damper, such as a linear damper

that includes a cylinder with a piston and damping fluid therein or a spring for assist (as described below).

[0090] As shown in FIGS. 1-5 and, more specifically in FIGS. 13-15, in a preferred embodiment, the pivot bin assembly 10 includes first and second latch assemblies 40a and 40b operatively associated with the first and second side panels 18a and 18b and the first and second sides 24a and 24b of the bucket 14. Preferably, the first latch assembly 40a includes a first hook portion 42a and a first striker portion 44a and the second latch assembly 40b includes a second hook portion 42b and a second striker portion 44b. In a preferred embodiment, the first hook portion 42a extends downwardly from the bottom edge 19a of the first side panel 18a and the first striker portion 44a is positioned in a first recess 41a defined in the top edge 25a of the first side 24a of the bucket 14 and the second hook portion 42b extends downwardly from the bottom edge 19b of the second side panel 18b and the second striker portion 44b is positioned in a second recess 41b defined in the top edge 25b of the second side 24b of the bucket 14.

[0091] In another embodiment, the first hook portion 42a extends upwardly from the top edge 25a of the first side 24a of the bucket 14 and the first striker portion 44a is positioned in a first recess defined in the bottom edge of the first side panel 18a, and the second hook portion 42b extends upwardly from the top edge 25b of the second side 24b of the bucket 14 and the second striker portion 44b is positioned in a second recess defined in the bottom edge of the second side panel 18b.

[0092] In another preferred embodiment, the first striker portion 44a extends downwardly from the bottom edge 19a of the first side panel 18a and the first hook portion 42a is positioned in a first recess 41a defined in the top edge 25a of the first side 24a of the bucket 14 and the second striker portion 44b extends downwardly from the bottom edge

19b of the second side panel 18b and the second hook portion 42b is positioned in a second recess 41b defined in the top edge 25b of the second side 24b of the bucket 14.

[0093] In another embodiment, the first striker portion 44a extends upwardly from the top edge 25a of the first side 24a of the bucket 14 and the first hook portion 42a is positioned in a first recess defined in the bottom edge of the first side panel 18a, and the second striker portion 44b extends upwardly from the top edge 25b of the second side 24b of the bucket 14 and the second hook portion 42b is positioned in a second recess defined in the bottom edge of the second side panel 18b. The first and second latch assemblies 40a and 40b can be actuated manually or electronically. As shown in FIG. 5, the pivot bin assembly 10 preferably includes an operating member or release button 27 disposed on the bucket 14. In a preferred embodiment, the operating member 27 comprises a switch that is in electrical communication (with wires or wirelessly) with the first and second latch assemblies 40a and 40b.

[0094] It will be appreciated that any type of latching mechanism that allows the bucket 14 to connect to the upper housing 26 is within the scope of the present invention. Furthermore, it will be appreciated that the terms first hook portion and second hook portion refer to the entire assembly secured to the upper housing in the figures. And, the terms first striker portion and second striker portion refer to the entire assembly secured to the upper housing in the figures. The hook portion can be any latching mechanism that includes a hook or latch that mates with or latches to a striker.

[0095] FIGS. 13-15 show an exemplary embodiment of the first latch assembly 40a. It will be understood that the second latch assembly 40b includes essentially the same components. FIGS. 13 and 15 show the first latch assembly 40a in the latched position and FIG. 14 shows the first latch assembly 40a in the unlatched position. Preferably, the first hook portion 42a is mounted in a recess 29a in the first side panel 18a and includes a

housing 31a, a hook 35a and guide members 37a that help guide the striker 39a (which can be secured in place by a threaded fastener 51a) into the desired position. As is known in the art, the hook 35a can be mounted on a pivot pin and include a spring 43a for urging it into the desired position. Preferably the first striker portion 44a includes a housing 45a that defines a guide recess 47a defined therein and that is spanned by the striker 39a. In use, when the bucket 14 is pivoted to the closed position, the guide members 37a are received in the guide recess 47a, and, as a result of the angle on the bottom edge of the hook 35a and the round shape of the striker 39a, the hook 35a is pivoted out of the way and the striker 39a is received fully between the guide members 37a. As a result of the spring 43a, the hook 35a is urged into the position shown in FIG. 13, and the first latch assembly 40a is now in the latched position.

[0096] It will be appreciated by those skilled in the art that by the first and second hook portions 42a and 42b extending downwardly from the first and second side panels 18a and 18b and latching to first and second striker portions 44a and 44b, which are essentially embedded in the first and second sides 24a and 24b of the bucket 14 allows the top edge 14a of the bucket 14 (i.e., top edges 25a and 25b and front top edge 28a to abut the bottom edge (bottom edges 19a and 19b and front bottom edge 12a) of the upper housing 26. In other words, the first side panel 18a, the first side 24a of the bucket 14 and the first latch assembly 40a are all lined up generally vertically and the second side panel 18b, the second side 24b of the bucket 14 and the second latch assembly 40b are all lined up generally vertically.

[0097] The first and second latch assemblies 40a and 40b shown in the figures are not a limitation on the present invention and any type of latch assembly or mechanism for securing the bucket 14 to the upper housing 26 is within the scope of the present invention.

For example, the pivot bin assembly can include a center latch that connects the bucket to the strongback.

[0098] As shown in FIGS. 4, 8 and 14, the inventive pivot bin assembly 10 is designed to stow standard Travel Pro 22" bags or luggage 11 wheels first on their edge (this type of bag is referred to herein as "standard luggage"). As will be understood by those of ordinary skill in the art, storage of a maximum amount of luggage within overhead stowage bins is of utmost importance in passenger aircraft and the standard luggage discussed herein is used as an industry standard when determining the amount of cargo that will fit into overhead stowage bins. As shown in FIG. 4, a piece of standard luggage 11 includes a top 11a, a bottom 11b, a front 11c, a back 11d and two sides 11e. Typically, the standard luggage 11 includes wheels on the bottom 11b thereof. In a preferred embodiment of the present invention, a pivot bin assembly 10 can stow up to four pieces of standard luggage within the bin interior. However, this is not a limitation on the present invention. In another embodiment, the present invention can store more or less standard luggage.

[0099] In a preferred embodiment, the pivot axis A1 or pivot point provided by the first and second pivot mechanisms 16a and 16b is not along the same lengthwise axis as the luggage stored within the bin interior, but is instead non-centrally located. Furthermore, the center of gravity of the luggage in the bin interior is moved outboard when compared to the prior art and closer to the pivot axis A1, thereby making the bucket 14 easier to close. Furthermore, compared to prior art pivot bins, the pivot bin assembly 10 can be moved further outboard from the aisle, thereby providing more passenger space and an open cabin feel. However, none of the statements that include comparisons to the prior art are intended to be a limitation on the present invention.

[00100] With reference to FIGS. 19A-19B, as will be appreciated by those of ordinary skill in the art, passenger aircraft typically include what is referred to as a passenger service unit ("PSU"), which is situated generally above each seat row (although not typically at the same pitch with respect to each seat row) in the overhead panel above the passenger seats in the cabin of airliners. Amongst other things a PSU contains reading lights, loudspeakers, illuminated signs and automatically deployed oxygen masks and also gaspers providing conditioned air. Passenger service units typically include individual PSU panels 117 that are specialized for each function (e.g., speaker panels, reading light panels, spacer panels, etc.) and that are positioned on rails 116 that run the length of the interior of the cabin. These individual functional specific panels are then configured to meet the aircraft and passenger needs, typically resulting in the configuration and installation of three hundred or more specialized panels. These panels 117 are installed within and cover a PSU channel 118 that is filled with both passenger elements 112 (e.g., reading lights, gaspers, flight attendant buttons, etc.) and systems elements 114 (wiring, oxygen tanks/components, cabin lights and associated electronics, ducting, etc.) creating a ceiling 120 above the passenger that restricts\bounds the passenger's head room. As shown in FIG. 19A, there is a fixed distance or height H1 from the floor 122 to the "ceiling" 120.

[00101] With reference to at least FIGS. 16-20B, in a preferred embodiment, the pivot bin assembly 10 includes an integrated PSU channel 50 and a PSU pod 52 for each passenger row. As discussed above, aircraft PSUs typically include two types of elements: passenger elements 112 (reading lights, gaspers/air vents and flight attendant call buttons) and systems elements 114 (wiring, oxygen tanks 113/components, cabin lights and associated electronics, ducting, etc.). As shown in FIG. 18, the PSU pod 52 provides a way to at least partially separate the passenger element bundle 112 for each row from the

systems elements bundle 114 for each row. By separating the passenger elements 112 from the systems elements 114 that are typically installed in a PSU, a PSU pod 52 (for the passenger elements 112) is configured or positioned independent of the systems elements 114, which are positioned in the PSU channel 50. As shown in FIGS. 18 and 20A, in a preferred embodiment, the passenger elements bundle 112 is positioned below the systems elements bundle 114. It will be appreciated that in another embodiment of the invention, the PSU pod 52 and PSU pod assembly 58 can be used with overhead bins different than the clamshell design described herein. For example, the PSU pod assembly 58 can be used with other types of pivot bins or an overhead stowage bin that is fixed but includes a pivotal door. The PSU pod assembly can be used with any overhead stowage bin that includes an enclosure for luggage and a PSU channel formed integrally therewith.

[00102] In a preferred embodiment, the PSU pod 52 preferably includes a housing 54 that includes first, second, third and fourth sides 53a, 53b, 53c and 53d, a top 53e and a bottom 53f that cooperate to define a pod interior 58, a plurality of reading lights 60 (that are aligned with and either extend through or shine light through reading light openings 54a), cabin lighting 62, a lens assembly 64 and a vent or gasper 66 defined in the housing for gasping conditioned air. It will be appreciated that the housing can be circular, ovular or elliptical in shape. For purposes of this disclosure, these shapes are considered to have first, second, third and fourth sides. In a preferred embodiment, the PSU pod 52 is part of a PSU pod assembly 58 that includes a panel 56 that has connectors 70a (such as hooks), that mate with rails or connectors 70b that are a part of the strongback 12 and extend in a direction that is generally parallel to the axis of the aircraft. In the figures, "70" is used to designate the connection between 70a and 70b. It will be appreciated that any type of connection, such as hooks, rivets, threaded fasteners, magnets, snap fit arrangements or any other method of securing the panels 56 and PSU pod 52 to the upper housing 26 or

strongback 12 is within the scope of the present invention. The PSU pod 52 is connected to and extends or hangs downwardly from the panel 56, thereby creating the PSU pod assembly 58 . In another embodiment, the panel can be omitted and the PSU pod itself can be connected to the rails 70b. When installed in an aircraft, wires for electrical connection (to both the reading lights 60 and the cabin lighting 62) and ducting for the gasper(s) 66 extends from the PSU channel 50 through an opening 56a (or openings) in the panel 56 and down into the housing 54. The PSU pod 52 can include a flight attendant call button 72 thereon.

[00103] As discussed above, in a preferred embodiment, the PSU pod assembly 58 also includes cabin lighting 62 that is associated with the PSU pod 52. The cabin lighting 62 can be any type of lighting (e.g., LEDs, incandescent, halogen, etc.) and can be positioned within or on housing 54. In a preferred embodiment, the PSU pod assembly 58 also includes a lens assembly 64 that helps direct light that shines from the cabin lighting 62 as desired. As is best shown in FIG. 17A, the light 62a from the cabin lighting 62 shines from the top of the PSU pod 52 and washes along and down the panels 56, bucket 14 and sidewalls, etc. of the aircraft. As a result of this arrangement, in a preferred embodiment, the PSU pods 52 provide passenger specific reading lights 60 that shine generally downwardly and outwardly and row specific cabin lighting that shines generally upwardly and outwardly. FIG. 17B shows another embodiment, where the reading lights, vent and flight attendant call button are omitted and the PSU pod 52 includes cabin lighting shining out the first, second, third and fourth sides 53a-53d. FIG. 17C shows another embodiment, where the reading lights, vent and flight attendant call button are omitted and the PSU pod 52 includes cabin lighting shining out the bottom of the housing 54. These embodiments can also include the reading lights, vent and flight attendant call button. These

embodiments all create cabin lighting specifically for each row by positioning the cabin lighting on or in the PSU pods 52.

[00104] With reference to FIGS. 20A-20B, as discussed above, generally, in the present invention, a passenger element bundle 112 is included in each PSU pod 52 and the systems elements 114 are disposed within the PSU channel 50 or at some other position above the ceiling defined by either the overhead bins or the panels 56 used to hide the systems elements 114. It will be understood that the systems elements 114 include both row specific elements (e.g., oxygen tanks/masks) and non-row specific elements (air ducts, electrical wiring, etc.). These elements are shown schematically in FIGS. 19A-20B as a box or bundle. However, it will be appreciated by those skilled in the art, that systems elements 114 can be located at any position along the PSU channel 50. In a preferred embodiment, the systems elements 114 are stacked generally above the PSU pod 52 and the passenger elements 112. In other words, the PSU pod 52 is positioned below the PSU channel 50 that houses the systems elements 114. However, as discussed above, not all systems elements 114 will be positioned directly above the passenger elements 112 or PSU pod 52. In other words, the passenger elements 112 or PSU pod 52 or located at a first level and the systems elements 114 are located at a second level or height that is higher than the passenger elements 112 or PSU pod 52.

[00105] The PSU pod 52 changes the configuration and installation methodology of the prior art by using a row specific design and a completed channel 50 built in to and defined within the pivot bin assembly 10. Compared to the prior art, this helps eliminate or reduce unnecessary spacer panels. In a preferred embodiment, each PSU pod 52 has the same pitch or alignment with respect to each row of seats 124. It will be appreciated that the positioning of the PSU pod assembly 58 can be adjusted as a result of the connection 70 between the connectors 70a and the rails 70b. In other words, the PSU pod assembly 58

can slide fore or aft on the rails 70b. Furthermore, by reducing the number of components in the PSU channel, the height of the panels can be raised (compared to the prior art), to a height H2, that is greater than the height H1 in a similar prior art aircraft. Furthermore, although the PSU pod 52 extend downwardly below the panels 56, in a preferred embodiment, it can be positioned at a height H1 that is the same or similar to the height of the prior art ceiling 120/panel 117 height. This allows the PSU pod 52 to be positioned such that the height H2 provides more passenger space or headroom than the prior art and positions the PSU pod 52 and the elements therein or thereon (e.g., reading lights, vents, cabin lighting, etc.) at a consistent position or pitch for each row of passengers. In other words, passenger headroom height between PSU pods 52 is increased when compared to the prior art. However, the positioning of the PSU pod 52 is not a limitation on the present invention. In another embodiment, they can be positioned lower than the prior art height H1 and/or they can be positioned such that they have a different pitch than each row.

[00106] In another embodiment, the cabin lighting can be omitted or more or less reading lights can be included. The switches or buttons for the reading lights 60 can be positioned on the PSU pod 52 or elsewhere within reach of the passenger for which each reading light 60 is intended. In a preferred embodiment, the reading lights 60 are controlled by the passengers seated in the row for which the PSU pod 52 is designated and the cabin lighting 62 is controlled by the crew from a location remote from the passengers.

[00107] With reference to FIG. 8, in a preferred embodiment, the pivot bin assembly 10 includes an environmental control system ("ECS") that includes ducting and electrical. In a preferred embodiment, the strongback 12 serves as the enclosure of the ECS ducting. As discussed above, at least a portion of the ECS components are positioned in the PSU channel 50. However, the pivot bin assembly 10 can also include at least one further separate ECS channel 74. Electrical wire harnesses can be directly attached to the pivot

bin assembly 10 instead of the aircraft for an easier and cleaner installation, when compared to the prior art. However, the ECS channel can be omitted and the ducting, electrical, etc. can be connected to the aircraft in another embodiment.

[00108] With reference to FIGS. 21-34, another embodiment of a pivot bin assembly 140 is shown. Pivot bin assembly 140 is similar to the pivot bin assembly 10 shown in FIGS. 1-16, however, the ears and corresponding indented portions are omitted and are replaced with clevis assemblies 142a and 142b that pivotally connect the upper housing 26 and the bucket 14. In other words, instead of integral ears extending downwardly from the upper housing, the clevis assemblies 142a and 142b (together with the pivot axles 16a and 16b) provide the pivotal connection of the bucket to the upper housing. It will be appreciated that most of FIGS. 22-34 do not include latch assemblies. However, the latch assemblies described above and shown in connection with pivot bin assembly 10 can be used with pivot bin assembly 140. In another embodiment, other latching mechanisms can be used.

[00109] As shown in FIG. 21, pivot bin assembly 140 generally includes strongback 12, a tray or bucket 14 (or buckets) with a first and a second pivot mechanism or pivot axle 16a and 16b on each side, and first and second side panels 18a and 18b and first and second clevis assemblies 142a and 142b. With respect to each pivot bin assembly 140, the strongback 12 and first and second side panels 18a and 18b are referred to herein together as the upper housing 26. Generally, the pivot bin assembly 140 includes the upper housing 26, which includes the strongback 12 and the first and second side panels 18a and 18b, and the bucket 14. The bucket 14 and upper housing 26 cooperate to define a bin interior 36. In a preferred embodiment, the bucket 14 defines the lower portion of the bin interior 36 and the upper housing defines the upper portion of the bin interior 36. As shown in FIG. 21, in a preferred embodiment, the pivot bin assembly 140 includes a plurality of stop members 15 positioned on the strongback 12 and the bucket 14 that stop the bucket 14

from opening further than the preferred opening position (described below). In another embodiment, the stop members 15 can be a long strip that spans most or all of the back of the bucket 14 (see FIGS. 33-34). In another embodiment, the stop members 15 can be located elsewhere.

[00110] In the embodiment shown in the figures, the strongback 12 and first and second side panels 18a and 18b are separate components. However, in another embodiment, the strongback 12 and first and second side panels 18a and 18b (the upper housing 26) can be a unitary component. In a preferred embodiment, the pivot bin assembly 140 includes a single piece bucket 14 that includes a bottom 28 and first and second opposing sides 24a and 24b. In another embodiment, the bucket 14 can include multiple pieces, e.g., a three piece design that includes the bottom 28 and first and second opposing sides 24a and 24b as separate components. Similar to the embodiments described above, it will be appreciated by those of ordinary skill in the art that the bucket 14 and upper housing 26 provide a "clamshell design," where at least a portion of the bottom edge 19a of the first side panel 18a and the bottom edge 19b of the second side panel 18b meet edge to edge with or abut one another and the front bottom edge 12a of the strongback 12 meets edge to edge with or abuts the top edge 14a of the bucket 14. In a preferred embodiment, in the closed position, other than the rear top edge 28b of the bottom 28 of the bucket 14 and the area adjacent thereto and the strongback 12, there is little to no overlap between the bucket 14 and the upper housing 26. In other words, in a preferred embodiment, the bucket 14 does not enter the upper portion of the bin interior 36, which is defined by the upper housing 26, when the bucket 14 is pivoted to the closed position.

[00111] When the bucket 14 is pivoted to the closed position, the first and second sides 24a and 24b of the bucket 14 are not received in the upper portion of the bin interior 36. In other words, the first top edge 25a of the first side 24a of the bucket 14 does not pass or

overlap with the first bottom edge 19a of the first side panel 18a when the bucket 14 is pivoted to the closed position. And, the second top edge 25b of the second side 24b of the bucket 14 does not pass or overlap with the second bottom edge 19b of the second side panel 18b when the bucket 14 is pivoted to the closed position. Preferably, the first top edge 25a abuts the first bottom edge 19a, and the second top edge 25b abuts the second bottom edge 19b. However, an embodiment is possible where the first and second top edges 25a and 25b and first and second bottom edges 19a and 19b or the front bottom edge 12a of the strongback 12 and front top edge 28a of the bucket 14 are horizontally separated from one another, but, in a vertical direction, the first and second top edges 25a and 25b do not pass or overlap with the first and second bottom edges 19a and 19b and/or the front bottom edge 12a and front top edge 28a do not pass or overlap when the bucket 14 is pivoted to the closed position.

[00112] As shown in FIGS. 21-34, first and second side panels 18a and 18b include first and second clevis assemblies 142a and 142b that house first and second pivot mechanisms 16a and 16b together with other components as described below. Generally, first and second pivot mechanisms 16a and 16b are operatively associated with the bucket 14, and allow the bucket 14 to pivot with respect to the upper housing 26 between an open position and a closed position. It will be appreciated that the first and second pivot mechanisms 16a and 16b or axles define a pivot axis. In a preferred embodiment, the first and second pivot mechanisms 16a and 16b are axially aligned.

[00113] As shown in FIGS. 21-22, in a preferred embodiment, pivot bin 140 includes a connecting unit 150 (described more fully below) on each side thereof, that, together with first and second pivot bin mechanisms 16a and 16b are housed within clevis assemblies 142a and 142b. First and second clevis assemblies 142a and 142b are connected to the first and second side panels 18a and 18b and extend downwardly to surround a portion of

the sides first and second sides 24a and 24b of bucket 14. In this embodiment, the pivot axles 16a and 16b are essentially the clevis pins and the clevis is comprised of an inner plate 175 and an outer plate 177 that each include an opening 179 therein, through which the pivot axle/pin 16 extends.

[00114] With reference to FIG. 23C, pivot axle 16b extends through lower arms 176b of the clevis assembly 142b, which, together with the clevis assembly and pivot axle on the other side of the bucket 14 provide a pivotal connection between the upper housing 26 and the bucket 14. The first and second clevis assemblies 142a and 142b can be connected to the upper housing 26 and bucket 14 by fasteners, threaded fasteners, bonding or the like. In another embodiment, the clevis assemblies 142a and 142b are integral with the upper housing 26. In another embodiment, the clevis assemblies can be integral with the bucket 14 or can be attached/secured to the bucket and the pivot axles can extend through the upper housing. As shown in FIG. 23C, in a preferred embodiment, second clevis assembly 142b includes threaded fasteners 173 that extend into a bushing 178 positioned in an opening in the side 18b. Pivot axle 16b can also extend through a bushing 178 positioned in openings 179 in the inner and outer plates 175 and 177 and an opening 182 in the side of the bucket 14. In another embodiment, bushing 178 can be omitted. It will be appreciated that the clevis assemblies 142a and 142b (and the inner and outer plates 175 and 177 thereof) can each be a unitary structure or they can be a plurality of plates that together form the clevis assembly. As shown in FIG. 23C, the clevis assembly can include a horizontal plate 181 that connects the inner and outer plates 175 and 177. In another embodiment, the pivot axle can be unitary with or secured to the inside surfaces of the inner and outer plates/lower arms or at least one of the inner or outer plates/lower arms. In another embodiment, the clevis assemblies can include a single inner or outer plate that extends between and is secured to the upper housing and the bucket.

[00115] As shown in FIG. 23D, in an embodiment that includes the rotary damper 17 and/or an assist spring 172 (described below), these components are also housed within the clevis assembly 142b. FIG. 23D also shows clevis assembly 142b including connectors that are unitary with the inside surface of upper arms 180b of the clevis.

[00116] In a preferred embodiment, the pivot bin assembly 140 includes a system that provides a user with assistance in closing an open bucket 14 with a predetermined minimal amount of force, and may also provide the means for a fully loaded closed bucket 14 to open in a controlled manner (damped). This can be accomplished in several ways. FIGS. 24-30 show a preferred embodiment for providing these features. Within the aircraft industry certain dimensions, weights, forces and other measurements, etc. are required or desired for opening and closing overhead bins and for the forces necessary for particular sized men and women to close the bins. Such considerations are taken into account in the description herein. However, it will be appreciated that the particular numbers, measurements, dimensions, etc. set forth herein are only exemplary and not limiting on the present invention.

[00117] FIG. 24 shows a side view of pivot bin assembly 140 in the open position. Two different open positions for the bucket 14 are shown. This is referred to herein as a two stage opening bucket or bin. The position shown in the solid lines is the bucket 14 in the open position when the pivot bin is empty (referred to herein as the "intermediate open position"). The position shown in dotted lines is the bucket 14 in the open position when the pivot bin is loaded beyond a predetermined weight (referred to herein as the "open position"). The bucket 14 can open fully to a certain angle or arc, which is shown in FIG. 24 as A1. When the bucket 14 is open to A1, it is in the open position (stop members 15 maintain the bucket 14 in the open position). When the bucket 14 is in the intermediate open position (which is a resting position, not just a position taken as a "snapshot" while

the bin is opening) it has moved through an angle or arc labeled A2 in FIG. 24. The angle or arc between the intermediate open position and the open position is shown as A3 in FIG. 24. In an exemplary embodiment, A1 is 42°, A2 is 31° and A3 is 11°. However, these angles are not a limitation on the invention. For example, in another exemplary embodiment, A1 can be between 30° and 60°, A2 can be between 20° and 40° and A3 can be between 5° and 20°. An assist spring or springs can be used to hold the bucket 14 in the intermediate open position, as will be described further below. In another embodiment, the two stage opening can be omitted and the bucket 14 can open all the way through arc A1 when opened.

[00118] In a preferred embodiment, the bin is damped when opened. This prevents the bucket 14 from slamming open as a result of gravity. Damping can be provided in several ways, as described below.

[00119] In a preferred embodiment, a closing assist force is provided along at least a portion of the closing arc of the bucket 14 (shown as an exemplary A3 in FIG. 24). As a result, when the bucket 14 is empty, the bucket 14 will be positioned in the intermediate open position. However, when the bucket 14 is loaded with a predetermined weight of luggage or when a user pulls down with enough force to overcome the spring force, the bucket 14 will be positioned in the open position. When a user pushes to close the bucket 14, the closing assist force created by the preloaded spring will help along arc A3, which is the portion of the closing arc that requires the most force by a user.

[00120] As is shown in FIGS. 24-27, in a preferred embodiment, pivot bin assembly 140 also provides a closing channel 144 that defines a closing surface 146 that when contacted or pushed by a user defines a closing point lever arm L1. In the prior art, oftentimes, a user places their hand somewhere in the middle of a pivot bin in an attempt to close it. However, in the present invention, with the closing channel 144 defined in the bucket 14, a

user will be inclined to press on the closing surface 146 to close the bucket 14. The closing surface 146 is located on the bucket 14 at an area that is relatively far from the pivot point, therefore providing a longer closing point lever arm L1 (than if a user places their hand in the middle of the bucket). This makes it easier for the user to close the bucket 14 than if they pushed on the bucket 14 at a point closer to the pivot point. When the bucket 14 is in the intermediate open position or (fully) open position, the closing surface 146 is also oriented such that the application of the closing force on the closing surface 146 by a user will generally be in line with the closing motion of the bucket 14 (see arrow F1 in FIG. 27). This positioning and orientation of the closing surface 146 helps ensure that the user pushes at an efficient point, which generally is a point far from the pivot point and close to perpendicular of the lever arm.

[00121] In a preferred embodiment, as shown in FIGS. 25A-25B, the bucket 14 is also shaped such that the center of gravity CG of the luggage is positioned for easier closing of the bucket 14. When compared with the prior art pivot bins in most aircraft, the bucket 14 is shaped to position the luggage within the bucket so that the center of gravity of the luggage is closer to the pivot point. In a preferred embodiment, this is achieved by providing an integrated ramp 148 at the leading edge of the bucket 14 which ensures the proper position of the luggage (more outboard on a single aisle aircraft) during the start of the upward motion (where a user experiences the highest hand loads). As shown in FIG. 25A, preferably, the ramp 148 is essentially the inverse of the closing channel 144.

[00122] As shown in FIG. 25A-25B, in a preferred embodiment, a local "crush" of the bucket 14 or luggage indentation 149 is defined in the inner surface of the bucket to allow the luggage 11 to move or shift further outboard when the bucket 14 is closed. This movement can be seen in a comparison of FIGS. 25A and 25B, which show the distance from the center of gravity CG of the luggage 11 to the pivot point as D1 and D2, where D2 is

shorter. The luggage indentation 149 is localized around the outboard lower corner of the luggage 11.

[00123] As discussed above, the damping and closing assist can be provided in a number of different ways. As shown in FIGS. 25A-25B, in a preferred embodiment of the present invention, the pivot bin assembly 140 includes a connector unit 150 that is connected at one end to the bucket 14 and at the other end to the upper housing 26 (preferably, one of the side walls 18). As shown in FIG. 25B, in a preferred embodiment, the connector unit 150 is positioned in a cut out 151 in the side 18b of the upper housing 26. The connector unit 150 generally can be used for either one or both of damping the opening of the bucket 14 or assisting with the closing of the bucket 14.

[00124] FIGS. 28-29 show schematic views of connector units 150a and 150b. Both connector units 150a and 150b include pivotal connections 152 (e.g. ball joints) at the opposite ends thereof that connect the unit to brackets 154 or the like that is located on the bucket 14 and the side wall 18 respectively. In use, the connecting units 150 pivot about pivotal connections 152 as necessary and lengthen or contract as necessary during opening or closing of the bucket 14. Connecting unit 150a includes two different springs 156 and 158 that are used to provide closing assist over two different portions of the closing arc A1. In another embodiment, a variable or two stage spring can be used to provide the same result. These two different portions may coincide with arcs A2 and A3 or they may not. In another embodiment, connecting unit 150a can also include damping capability. Connecting unit 150b includes closing assist over at least a portion of closing arc A1 and also provides damping during opening of the bucket 14. As shown in FIG. 29, in a preferred embodiment, spring assist is provided over closing during bucket travel along A3 and damping while opening over at least A2 (and preferably all of A1). Damping can be provided in any known way. In an exemplary embodiment, damping is provided by fluid

160 disposed within a cylinder 162, as shown in FIG. 29. Pneumatic or gas cylinders can also be used.

[00125] As will appreciated by those of ordinary skill in the art, closing of the bucket 14 is most difficult at the beginning of the process (e.g., A3, as shown in FIG. 24). Therefore, the connecting units 150 preferably provide a spring lift assist during at least this portion of the closing process.

[00126] It will be appreciated that connecting units 150 are provided on both sides of the bucket 14 and can be connected to the bucket 14 and upper housing 26 by any connection method or interface and preferably using brackets 154 with an opening therethrough or a stud extending therefrom.

[00127] In another preferred embodiment, as shown in FIG. 30, the pivot bin assembly 140 can include a powered lift assist connecting unit 150c, which provides powered lift assist over at least a portion of or the entire closing arc A1. Powered opening/damping can also be provided. Preferably, when powered lift assist is desired, a powered lift assist connecting unit 150c is used on one side of the bucket 14 and a connecting unit 150 with only damping capability is used on the other side of the bucket 14. In another embodiment, powered lift assist connecting units 150c can be used on both sides of the bucket 14. It will be appreciated that all of the connecting units 150a, 150b and 150c (and any connecting units 150 with only damping capability) are all interchangeable and use the same interface (e.g., brackets 154) to connect to the bucket 14 and upper housing 26. In an embodiment, the brackets 154 may have to be moved to accommodate the powered lift assist connecting unit 150c as opposed to the other connecting units 150. It will be appreciated that the powered lift assist connecting unit 150c is in electrical communication with the release button 27 of the associated bucket 14. In another embodiment, a separate button for closing can be provided.

[00128] FIG. 23D shows another embodiment that provides damping of the opening bucket and/or mechanical/spring assistance in closing the bucket 14. FIG. 23D is a cross-section that is taken at the same cut line as FIG. 23C in a pivot bin assembly with the embodiment now being described. As shown, the pivot assembly 142b includes a rotary damper 17 (as described above), and at least one assist spring 172. In a preferred embodiment, the assist spring 172 is a coil spring that is co-axial with pivot axle 16. In use, at least one end of the spring abuts a stop such that when the bucket 14 is opened passed a predetermined point (e.g., after A2), the spring 172 is preloaded. In the example shown in FIG. 24, spring 172 holds the empty bucket in the intermediate open position. Once a user pulls down or a bag of sufficient weight is placed on the bin, the bucket opens further and spring 172 is preloaded. This provides a user closing the bin with assistance. It will be appreciated that once the bucket 14 is loaded, the bucket 14 only moves between the open and closed positions. In this configuration it bypasses the intermediate open position as the weight of the luggage overcomes the spring force.

[00129] In another embodiment, the assist spring 172 can be a spiral spring or other type of spring. This embodiment can include the same benefits as those discussed above with respect to the various connecting units 150. For example, coil spring 172 can provide closing assist over a portion of the closing arc or over the entire closing arc or a variable/two stage spring or multiple springs can be used to provide differing amounts of closing force assistance over the closing arc. Furthermore, rotary damper 17 can provide damping during a portion or all of the opening arc. In a preferred embodiment of the present invention, the pivot bin assembly 140 includes any of the connecting units 150 discussed above and rotary dampers 17 with coil springs 172. For example, in this embodiment, closing assist can be provided during one portion of the closing arc by coil

springs 172 and during another portion of the closing arc by spring 156 in connecting unit 150.

[00130] In summary, the pivot bin assembly 140 can include a) damping capability, b) damping capability and closing assist, c) damping capability and two or more stage closing assist, or d) damping capability and powered lift assist.

[00131] FIGS. 31-34 show another arrangement of the clevis assemblies 142a and 142b together with the cut out 151 in the side 18b of the upper housing 26 and the connecting unit 150. In this embodiment, inner plates 175a and 175b and outer plates 177a and 177b and cut outs 151 are shaped differently and connecting units 150 are oriented differently. Also, the pivot axles 16a and 16b extend through the lower brackets 154. However, this embodiment operates the same as that described above.

[00132] Generally, when a two stage opening bucket/bin is in use, when the latches are released, the damping capability of the pivot bin assembly 10 or 140 allows damped opening of the bucket 14 to an angle (the intermediate open position) that provides easy access for most luggage, even when empty. Furthermore, compared to the prior art, in the intermediate open position, the pivot bin assemblies 10 or 140 increase the headroom in the cabin when the buckets 14 are open and empty (in the intermediate open position). Next, once passenger luggage 11 is positioned on the lip of the bucket 14 or once a typical bag/ luggage is in the bucket 14, the bucket 14 will drop to the open position in a controlled/damped manner. This allows for placement of all luggage sizes.

[00133] With reference to FIGS. 24-27, an example of an operation cycle of loading and unloading a two stage opening bucket or bin with luggage before and after a flight will now be described. As discussed above, all angles, weights, loads, dimensions, times, etc. used herein are exemplary. First, the release button 27 of an empty bucket 14 is pressed by a user. The bucket 14 opens 31° (A2) at a damped rate to the intermediate open position

(see the bucket in dashed lines in FIG. 26). The springs (springs 156 in the connector assemblies and/or coil springs 172) are now ready to be engaged. The user then places luggage 11 on the lip of the bucket 14 (or pulls down with their hand). The potential energy from the luggage 11 lowers the bucket 14 through an additional 11° (A3) to the open position, which displaces the springs 156, 158 and/or 172 on both sides of the bucket 14 and loads them with enough energy to create 13 ft-lbs of torque (for example). The user then slides their luggage fully into the bucket 14 (see FIG. 27). To accommodate more luggage, the users bag is preferably turned so that it rests on a side. In a preferred embodiment, the bucket 14 is damped while it is lowered.

[00134] Assuming other luggage has now been placed in the same bucket 14, in this scenario, the bucket 14 is now completely filled and the luggage weighs approximately 88 lbs in total. As shown in FIG. 27, a user now pushes approximately vertically on the closing surface 146 with approximately 27 lbs of force (see arrow F1). The springs 156 and/or 172 apply an assist load of 7 lbs over the first 11° of the bucket 14 closing arc (A3). The user then continues pushing the bucket 14 closed through the remaining 31° (A2). In the embodiment with a variable spring or with a second spring 158, assist can also be provided over some or all of the remainder of the closing arc. As can be seen in FIG. 27, F1 is approximately vertical. With the orientation of the bucket 14 shown in this embodiment, the closing surface 146 is configured such that it is parallel or close to parallel with the ground. This prompts a user to press up in the direction of F1, which makes closing the bucket easier than pushing elsewhere on the bucket or pushing on a surface that is at a steep angle compared to horizontal.

[00135] After the flight (or at any time during the flight), to open the bucket 14, the user presses the release button 27 and the fully loaded bucket 14 opens the full 42° (A1) to the

open position at a damped rate. The user can then pull their luggage 11 from the fully opened bucket 14.

[00136] In an exemplary embodiment, the bucket 14 free falls from the closed to open position in 2.5±1 seconds while loaded with luggage anywhere between 0-80 lbs in weight. In the exemplary scenarios given herein the bucket 14 itself weighs approximately 10 lbs. This results in a combined weight range of 10-90 lbs (but could be higher). In an exemplary closing force scenario it is desired for the closing force (provided by the user) not to exceed 27 lbs. In order to achieve this, a closing assist force of approximately 7 lbs is provided over the first 11° (A3) of the bucket 14 closing motion. This equates to approximately 13 ft-lbs of torque at the pivot point.

[00137] As shown in FIG. 26, the two stage opening bucket also provides for two different orientations for placing standard luggage in the bin interior 36. In a preferred embodiment, A2 is dimensioned such that when the bucket 14 is in the intermediate open position, a bag can be placed in the bucket 14 on its top or bottom, as shown in dashed lines in FIG. 26 and A1 is dimensioned such that when the bucket 14 is in the open position, a bag can be placed in the bucket 14 on its side, as shown in solid lines in FIG. 26. In another example, when the bucket 14 is in the intermediate open position, a user can place their bag on the lip of the bucket 14 on its top or bottom, allow the weight of the bag to open the bin to the open position and then turn the bag on its side and slide it all the way into the bin interior 36. It will be appreciated that the two stage opening capability can be applied to other overhead bins, e.g., bins that open by translating or moving downwardly as opposed to pivoting open.

[00138] Unless the context clearly requires otherwise, throughout the description and the claims, the words "comprise," "comprising," and the like are to be construed in an inclusive sense, as opposed to an exclusive or exhaustive sense; that is to say, in the sense

of "including, but not limited to." As used herein, the terms "connected," "coupled," or any variant thereof, means any connection or coupling, either direct or indirect, between two or more elements; the coupling of connection between the elements can be physical, logical, or a combination thereof. Additionally, the words "herein," "above," "below," and words of similar import, when used in this application, shall refer to this application as a whole and not to any particular portions of this application. Where the context permits, words in the above Detailed Description of the Preferred Embodiments using the singular or plural number may also include the plural or singular number respectively. The word "or" in reference to a list of two or more items, covers all of the following interpretations of the word: any of the items in the list, all of the items in the list, and any combination of the items in the list.

[00139] The above-detailed description of embodiments of the disclosure is not intended to be exhaustive or to limit the teachings to the precise form disclosed above. While specific embodiments of and examples for the disclosure are described above for illustrative purposes, various equivalent modifications are possible within the scope of the disclosure, as those skilled in the relevant art will recognize. Further, any specific numbers noted herein are only examples: alternative implementations may employ differing values, measurements or ranges.

[00140] The teachings of the disclosure provided herein can be applied to other systems, not necessarily the system described above. The elements and acts of the various embodiments described above can be combined to provide further embodiments. Any measurements or dimensions described or used herein are merely exemplary and not a limitation on the present invention. Other measurements or dimensions are within the scope of the invention.

[00141] Aspects of the disclosure can be modified, if necessary, to employ the systems, functions, and concepts of the various references described above to provide yet further embodiments of the disclosure.

[00142] These and other changes can be made to the disclosure in light of the above Detailed Description of the Preferred Embodiments. While the above description describes certain embodiments of the disclosure, and describes the best mode contemplated, no matter how detailed the above appears in text, the teachings can be practiced in many ways. Details of the system may vary considerably in its implementation details, while still being encompassed by the subject matter disclosed herein. As noted above, particular terminology used when describing certain features or aspects of the disclosure should not be taken to imply that the terminology is being redefined herein to be restricted to any specific characteristics, features or aspects of the disclosure with which that terminology is associated. In general, the terms used in the following claims should not be construed to limit the disclosures to the specific embodiments disclosed in the specification unless the above Detailed Description of the Preferred Embodiments section explicitly defines such terms. Accordingly, the actual scope of the disclosure encompasses not only the disclosed embodiments, but also all equivalent ways of practicing or implementing the disclosure under the claims.

[00143] While certain aspects of the disclosure are presented below in certain claim forms, the inventors contemplate the various aspects of the disclosure in any number of claim forms. For example, while only one aspect of the disclosure is recited as a means-plus-function claim, other aspects may likewise be embodied as a means-plus-function claim, or in other forms, such as being embodied in a computer-

readable medium. Accordingly, the applicant reserves the right to add additional claims after filing the application to pursue such additional claim forms for other aspects of the disclosure.

[00144] The scope of the claims should not be limited by the preferred embodiments set forth in the examples, but should be given the broadest interpretation consistent with the description as a whole.

What is claimed is:

1. An aircraft storage bin comprising:

an upper housing that includes first and second side panels,

a bucket that includes a bottom and first and second side walls, wherein the bucket cooperates with the upper housing to define a bin interior,

a first assembly that includes at least one of a first inner plate and a first outer plate and that extends downwardly from a bottom edge of the first side panel of the upper housing to the first side wall of the bucket, or upwardly from a top edge of the first side wall of the bucket to the first side panel of the upper housing,

a second assembly that includes at least one of a second inner plate and a second outer plate and that extends downwardly from a bottom edge of the second side panel of the upper housing to the second side wall of the bucket, or upwardly from a top edge of the second side wall of the bucket to the second side panel of the upper housing,,

a first pivot mechanism operatively associated with the bucket and the first assembly,

a second pivot mechanism operatively associated with the bucket and the second assembly, wherein the bucket pivots about a pivot axis with respect to the upper housing between an open position and a closed position; and

a first connecting unit having a first end pivotally connected to the first side wall of the bucket and a second end pivotally connected to the first side panel, and a second connecting unit having a first end pivotally connected to the second side wall of the bucket and a second end pivotally connected to the second side panel, wherein the first and second connecting units provide one or both of damping when the bucket pivots to the open position and assistance when the bucket pivots to the closed position.

2. The aircraft storage bin of claim 1 wherein the first assembly includes both the first inner plate and the first outer plate, wherein the first pivot mechanism extends between the first

inner plate and the first outer plate, wherein the second assembly includes both the second inner plate and the second outer plate, wherein the second pivot mechanism extends between the second inner plate and the second outer plate, and wherein the first connecting unit is positioned at least partially between the first inner plate and the first outer plate and the second connecting unit is positioned at least partially between the second inner plate and the second outer plate.

3. The aircraft storage bin of claim 2 wherein at least one of the first or second connecting units includes an assist spring associated therewith, and wherein the assist spring is preloaded when the bucket is pivoted to the open position.

4. An aircraft storage bin comprising:

an upper housing that includes first and second side panels,

a bucket that includes a bottom and first and second side walls, wherein the bucket cooperates with the upper housing to define a bin interior,

a first assembly that includes at least one of a first inner plate and a first outer plate and that extends downwardly from a bottom edge of the first side panel of the upper housing to the first side wall of the bucket, or upwardly from a top edge of the first side wall of the bucket to the first side panel of the upper housing,

a second assembly that includes at least one of a second inner plate and a second outer plate and that extends downwardly from a bottom edge of the second side panel of the upper housing to the second side wall of the bucket, or upwardly from a top edge of the second side wall of the bucket to the second side panel of the upper housing,

a first pivot mechanism operatively associated with the bucket and the first assembly, and

a second pivot mechanism operatively associated with the bucket and the second assembly, wherein the bucket pivots about a pivot axis with respect to the upper housing between an open position and a closed position;

wherein the upper housing includes a stopper, and wherein the bottom of the bucket includes a rear edge that abuts the stopper when the bucket is in the open position.

5. An aircraft storage bin comprising:

an upper housing that includes first and second side panels,

a first assembly that includes at least one of a first inner plate and a first outer plate and that is secured to the first side panel and extends downwardly from a bottom edge of the first side panel,

a second assembly that includes at least one of a second inner plate and a second outer plate and that is secured to the second side panel and extends downwardly from a bottom edge of the second side panel,

a bucket that includes a bottom and first and second sides, wherein the bucket cooperates with the upper housing to define a bin interior,

a first pivot axle operatively associated with the bucket and the first assembly, and a second pivot axle operatively associated with the bucket and the second assembly, wherein the first and second pivot axles are axially aligned along a pivot axis, and wherein the bucket pivots about the pivot axis with respect to the upper housing between an open position and a closed position.

6. The aircraft storage bin of claim 5 further comprising a first connecting unit having a first end pivotally connected to the first side of the bucket and a second end pivotally connected to the first side panel, and a second connecting unit having a first end pivotally connected to the second side of the bucket and a second end pivotally connected to the second side panel, wherein the first and second connecting units provide one or both of damping when the bucket pivots to the open position and assistance when the bucket pivots to the closed position.

7. The aircraft storage bin of claim 6wherein the first assembly includes both the first inner plate and the first outer plate, wherein the first pivot axle extends between the first inner plate and the first outer plate, wherein the second assembly includes both the second inner plate and the second outer plate, wherein the second pivot axle extends between the second inner plate and the second outer plate, and wherein the first connecting unit is positioned between the first inner plate and the first outer plate and the second connecting unit is positioned between the second inner plate and the second outer plate.

8. The aircraft storage bin of claim 5 wherein at least one of the first or second pivot axles includes an assist spring associated therewith, and wherein the assist spring is preloaded when the bucket is pivoted to the open position.

9. The aircraft storage bin of claim 8 wherein the assist spring is a coil spring that is co-axial with the first or second pivot mechanism.

10. An aircraft storage bin comprising:

an upper housing that includes first and second side panels,

a bucket having first and second opposing side walls that cooperates with the upper housing to define a bin interior, wherein the bucket is pivotally connected to the upper housing,

a first assembly that includes at least one of a first inner plate and a first outer plate, and

a second assembly that includes at least one of a second inner plate and a second outer plate, wherein the first assembly extends downwardly from a bottom edge of the first side panel to the first side wall of the bucket, or upwardly from a top edge of the first side wall of the bucket to the first side panel of the upper housing, and the second assembly extends downwardly from a bottom edge of the second side panel to the second side wall of the bucket, or upwardly from a top edge of the second side wall of the bucket to the second side panel of the upper housing,

a first pivot axle operatively associated with the first assembly and the bucket, and

a second pivot axle operatively associated with the second assembly and the bucket, wherein the first and second pivot axles are axially aligned along a pivot axis, and wherein the bucket pivots about the pivot axis with respect to the upper housing between an open position and a closed position, and wherein the first pivot axle extends through the first side wall of the bucket and the second pivot axle extends through the second side wall of the bucket.

11. The aircraft storage bin of claim 10 further comprising first and second latch assemblies, wherein the first latch assembly is associated with the first side panel and the first side wall of the bucket, and wherein the second latch assembly is associated with the second side panel and the second side wall of the bucket.

12. The aircraft storage bin of claim 11 wherein the first latch assembly includes a first hook portion and a first striker portion, wherein one of the first hook portion and the first striker portion is associated with the first side panel and the other of the first hook portion and the first striker portion is associated with the first side wall of the bucket, wherein the second latch assembly includes a second hook portion and a second striker portion, wherein one of the second hook portion and the second striker portion is associated with the second side panel and the other of the second hook portion and the second striker portion is associated with the second side wall of the bucket.

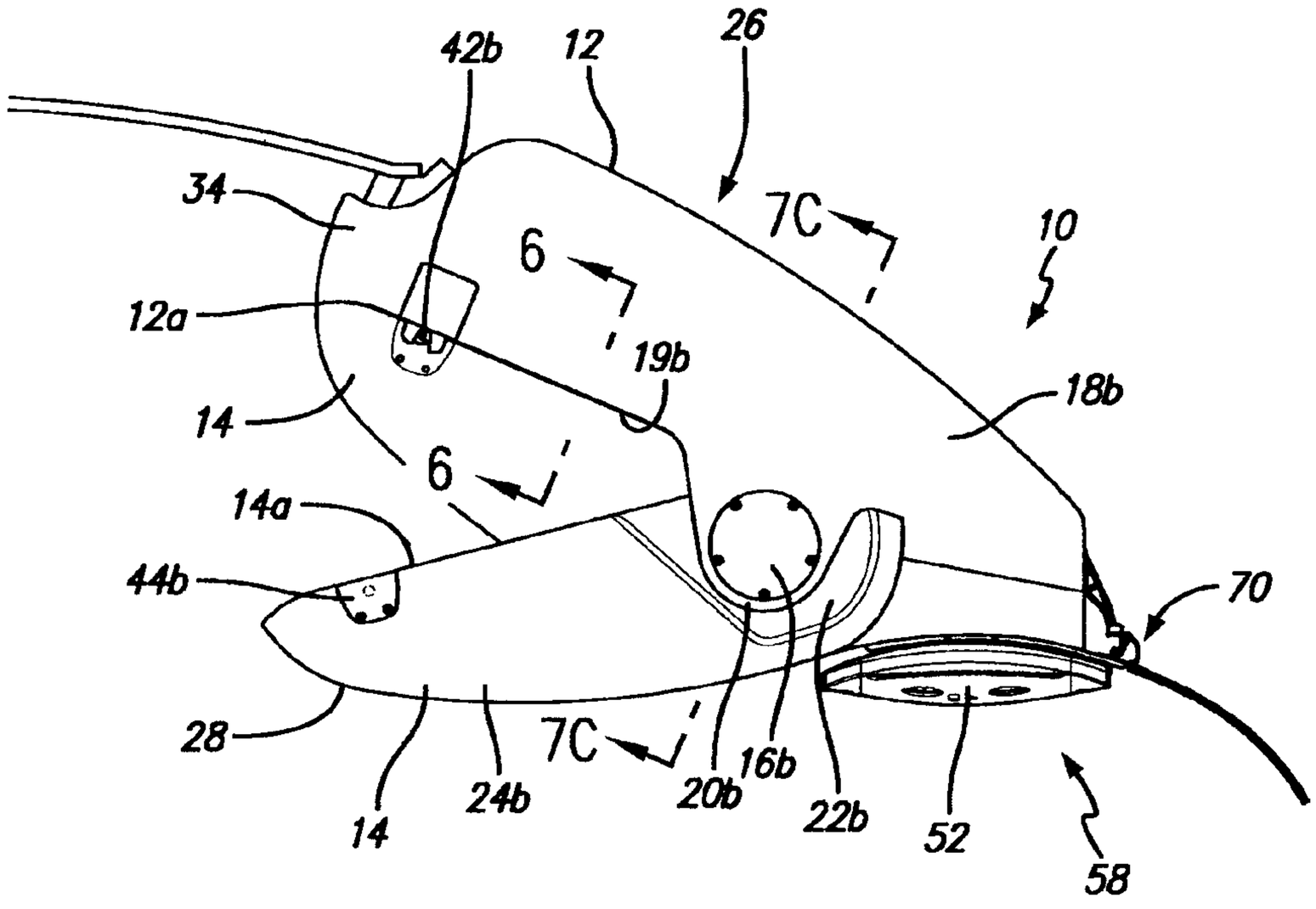
42b
12
26
34
7C
10
6
12a
19b
18b
14
6
14a
44b
70
28
7C
16b
14
24b
20b
22b
52
58

FIG. 1

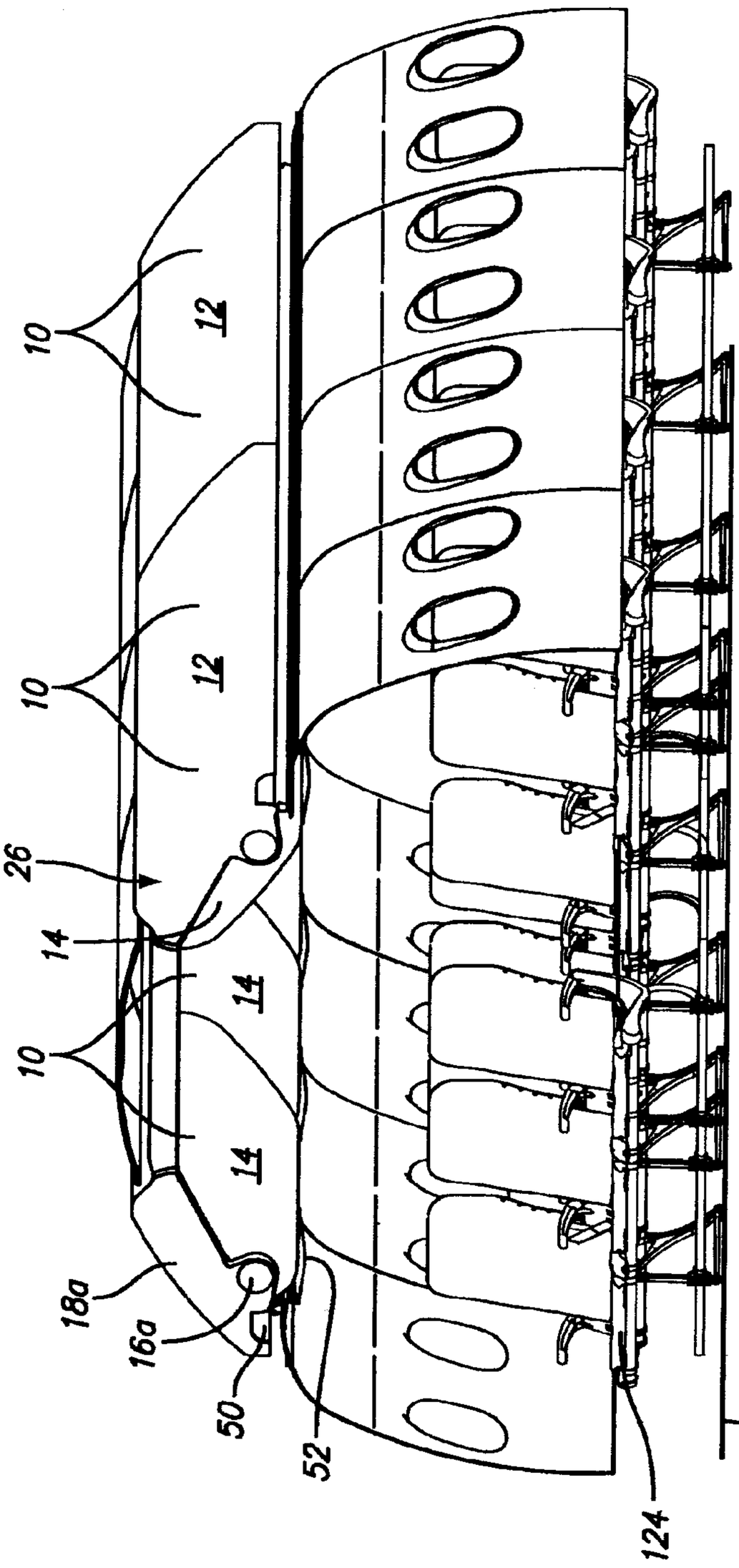

FIG. 2

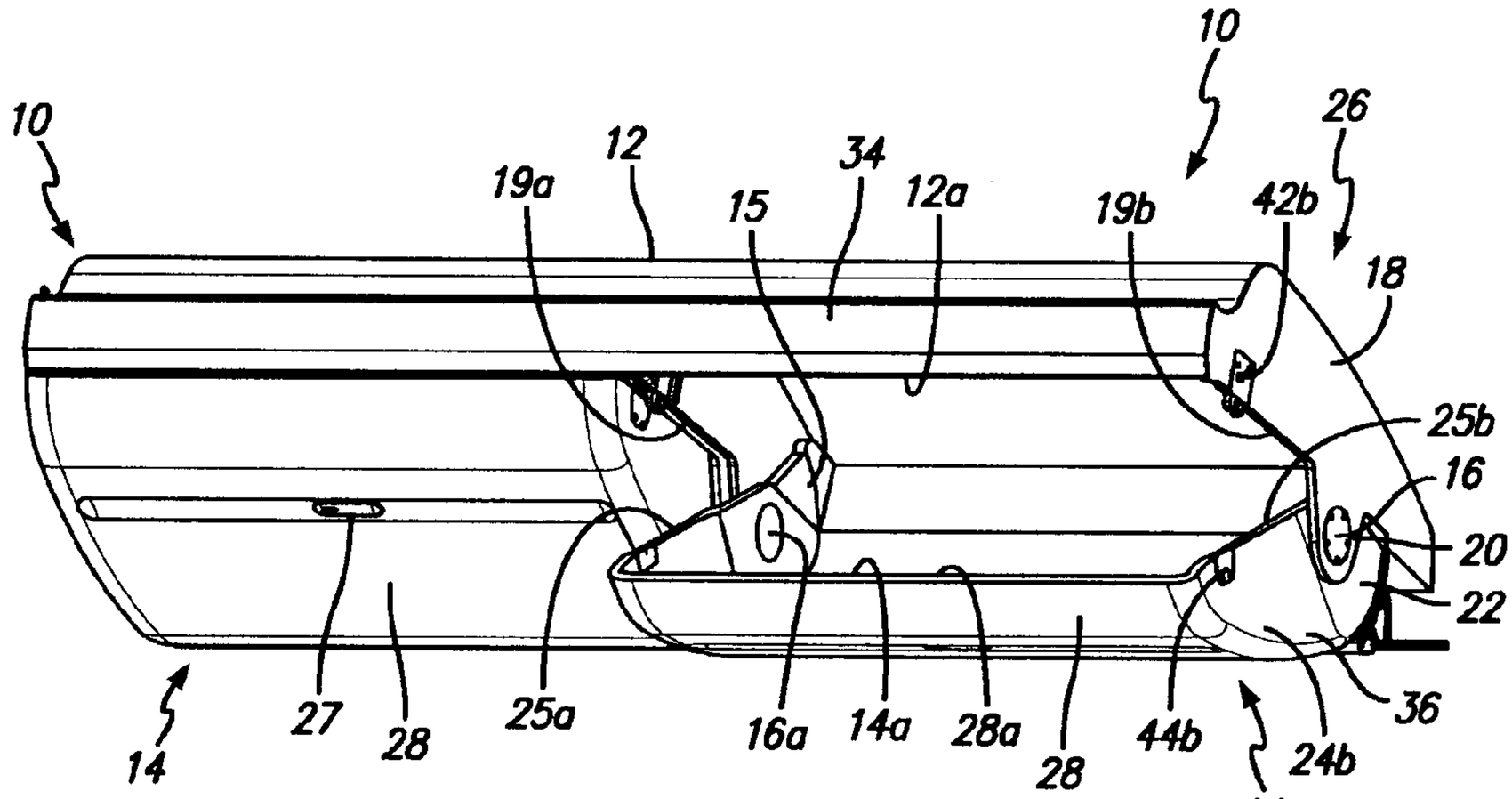
10
19a
12
15
34
12a
10
19b
42b
26
18
25b
16
20
22
14
27
28
25a
16a
14a
28a
28
44b
24b
36
14

FIG. 3

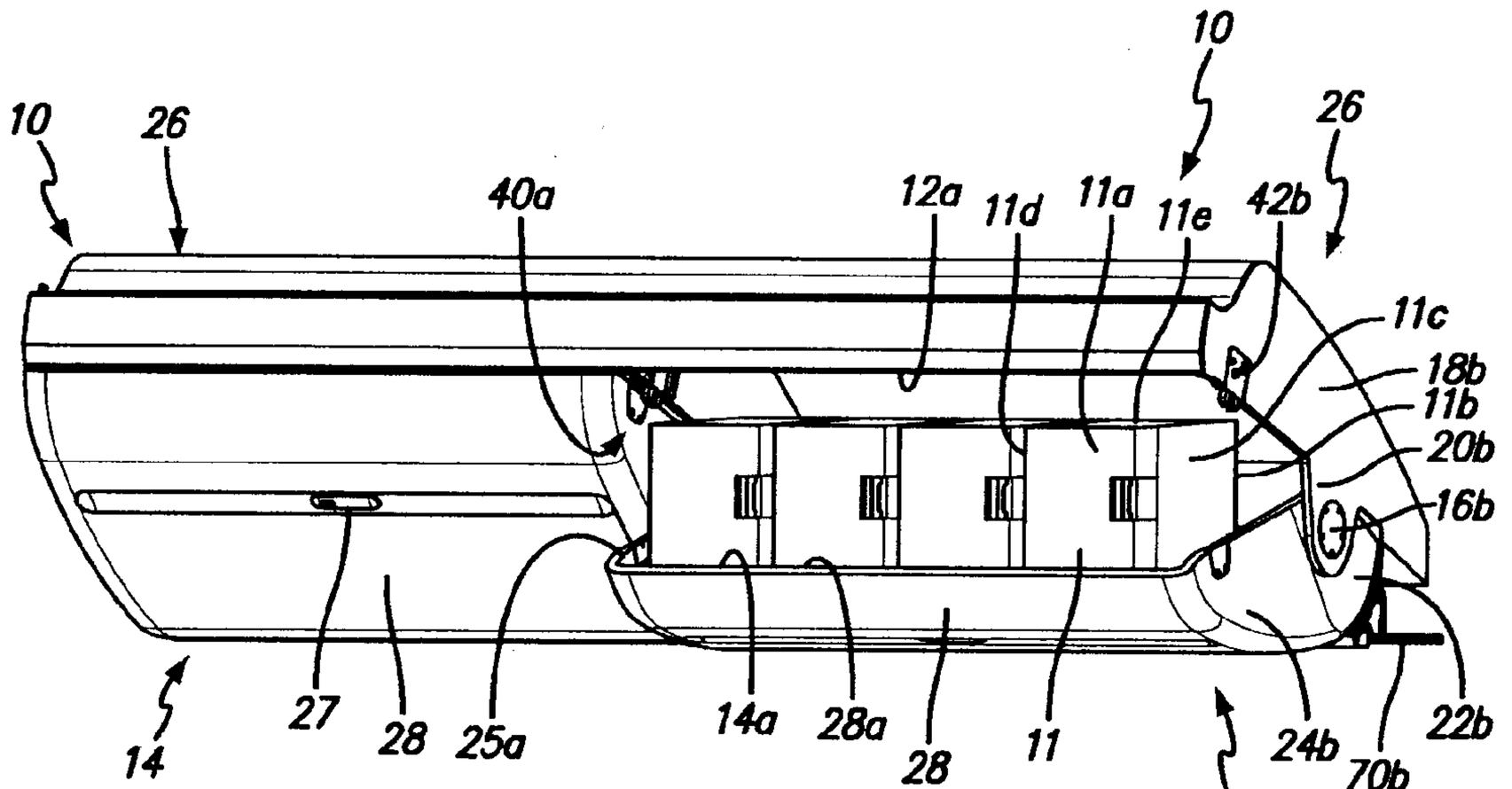
10
26
40a
12a
11d
11a
11e
10
42b
26
11c
18b
11b
20b
16b
14
27
28
25a
14a
28a
28
11
14
24b
70b
22b

FIG. 4

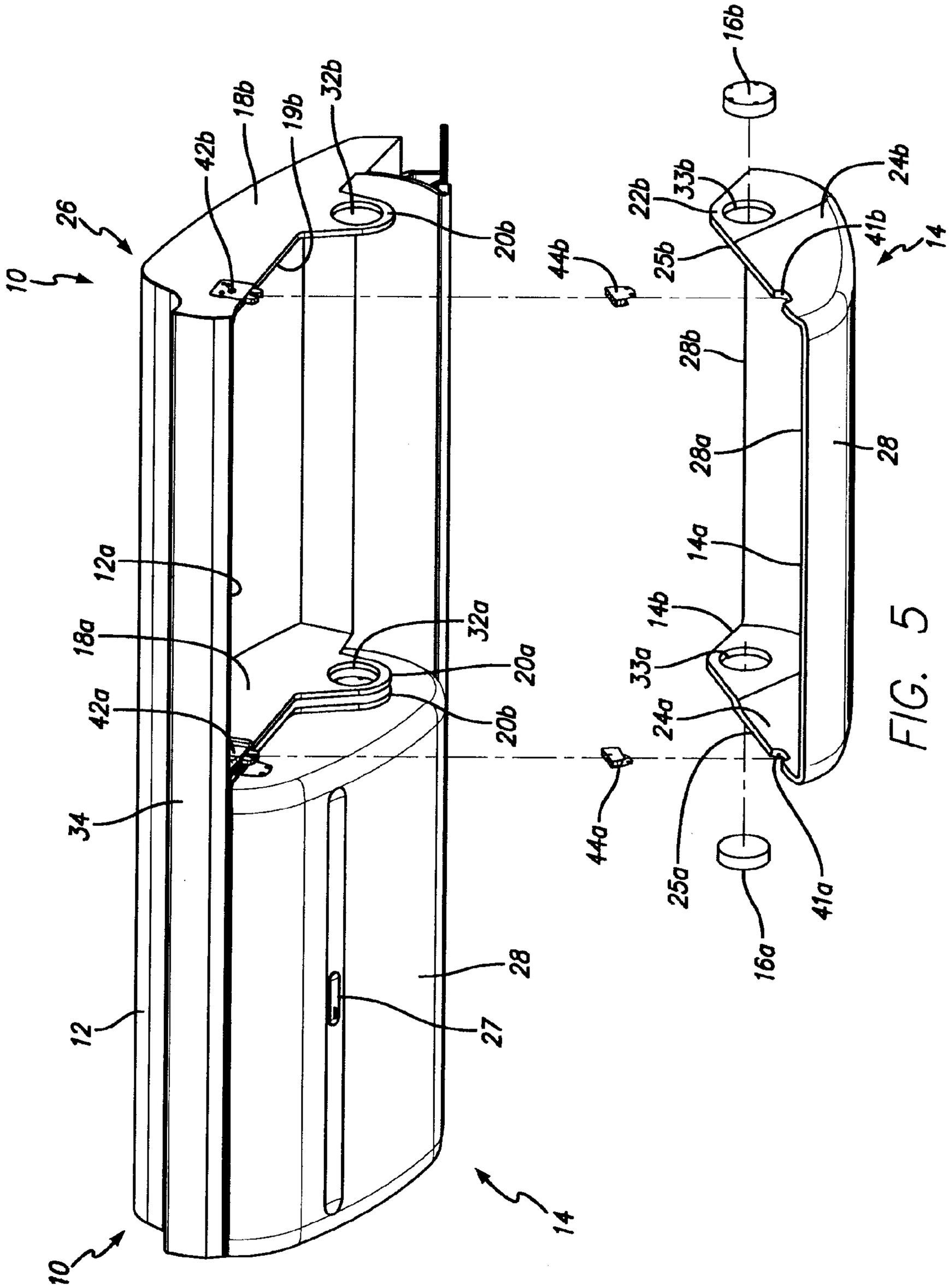
10
26
42b
18b
19b
32b
20b
44b
16b
22b
33b
24b
25b
41b
14
28b
28a
28
14a
14b
33a
24a
44a
25a
41a
16a
12a
18a
42a
32a
20a
34
20b
12
27
28
10
14

FIG. 5

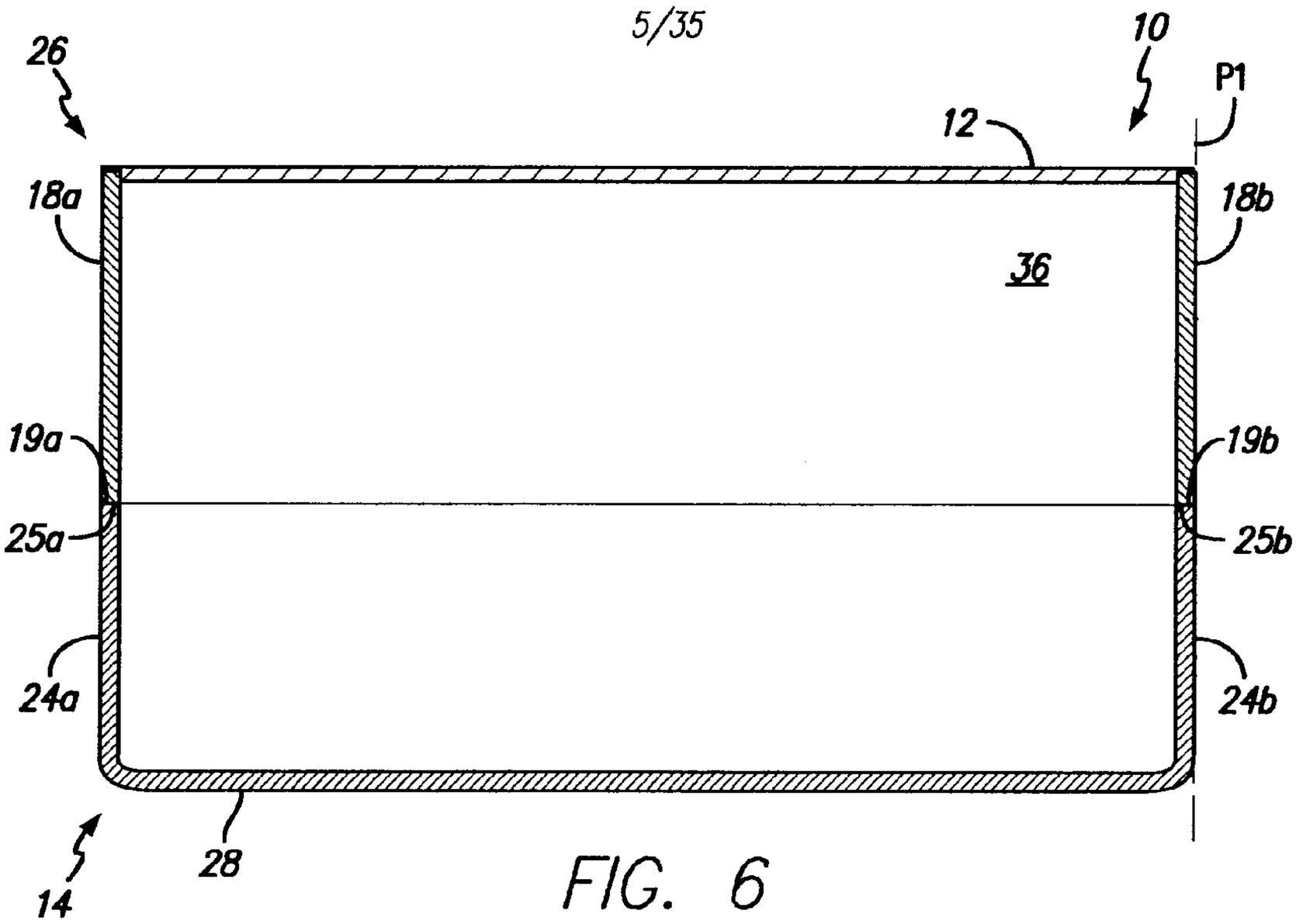
26
10
P1
12
18a
18b
36
19a
19b
25a
25b
24a
24b
28
14

FIG. 6

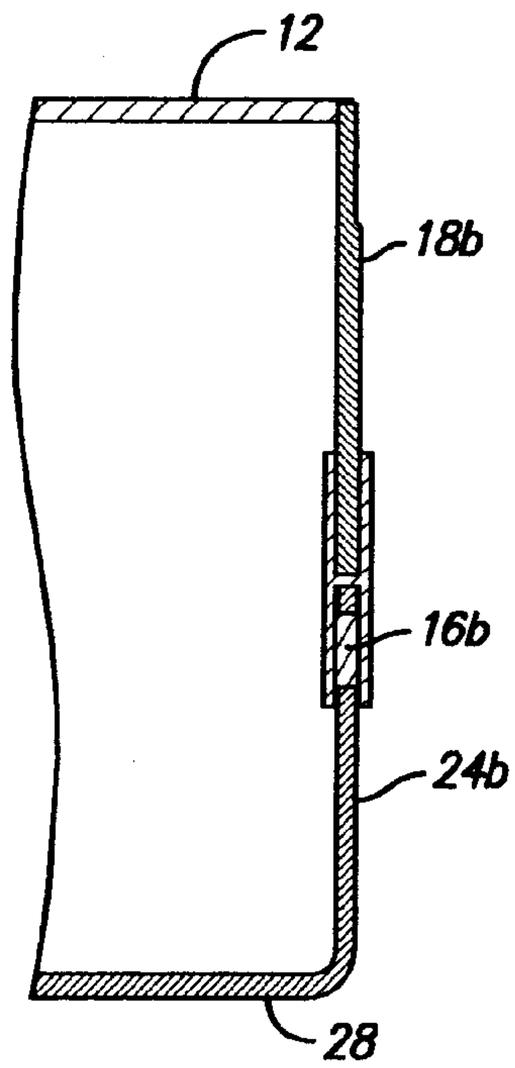
12
18b
16b
24b
28

FIG. 7A

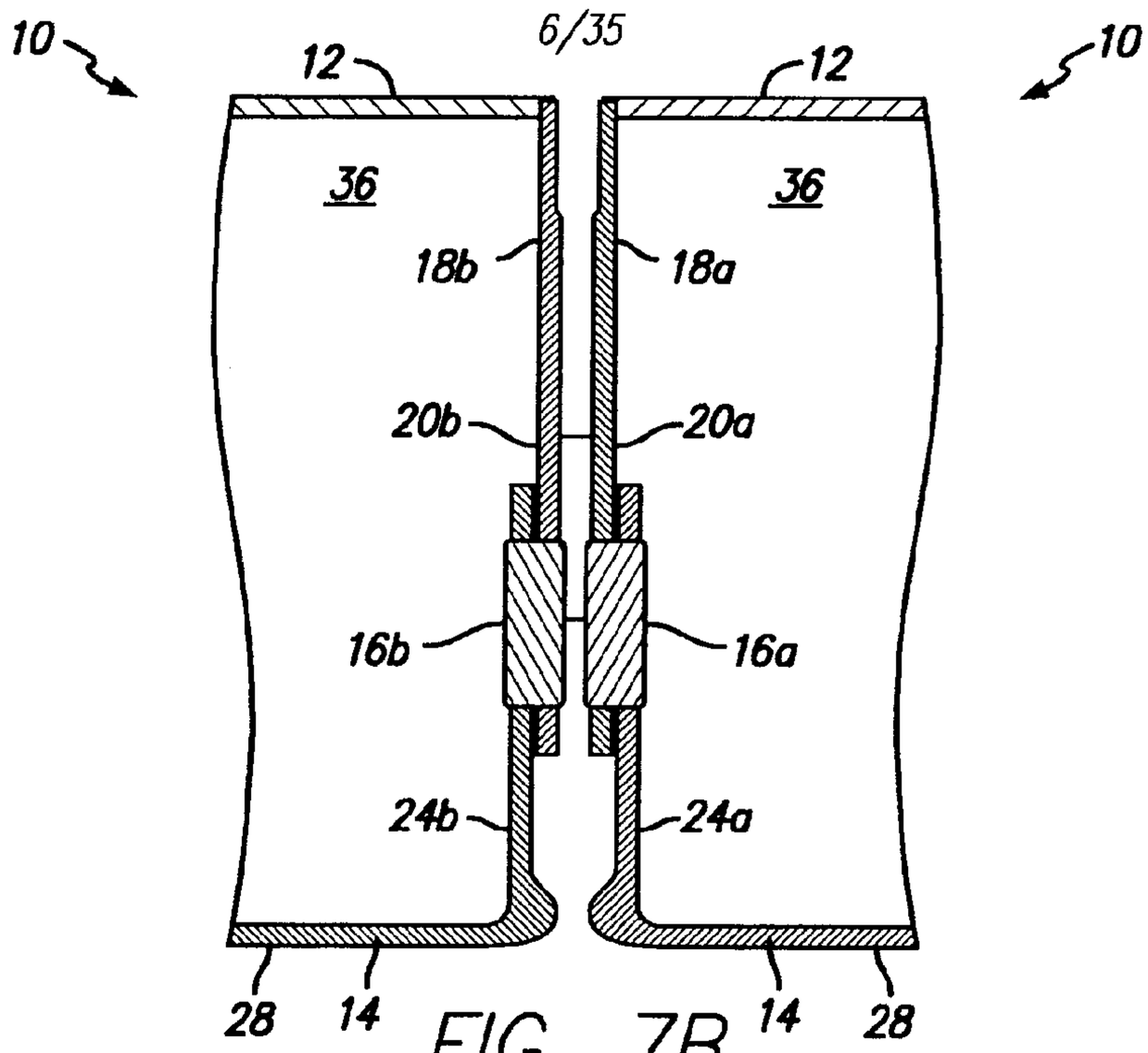
10
12
12
10
36
36
18b
18a
20b
20a
16b
16a
24b
24a
28
14
14
28

FIG. 7B

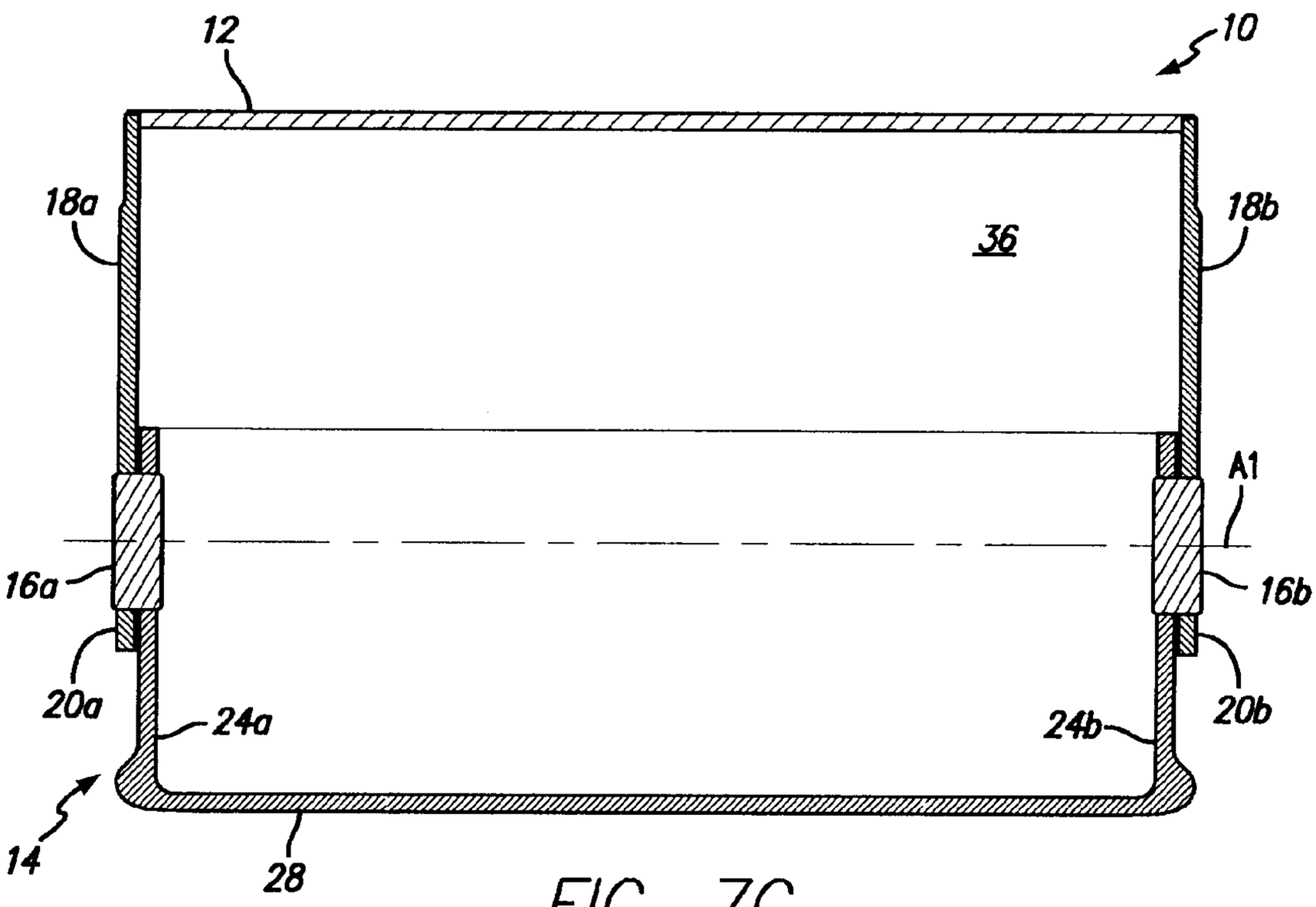
12
10
18a
18b
36
A1
16a
16b
20a
20b
24a
24b
14
28

FIG. 7C

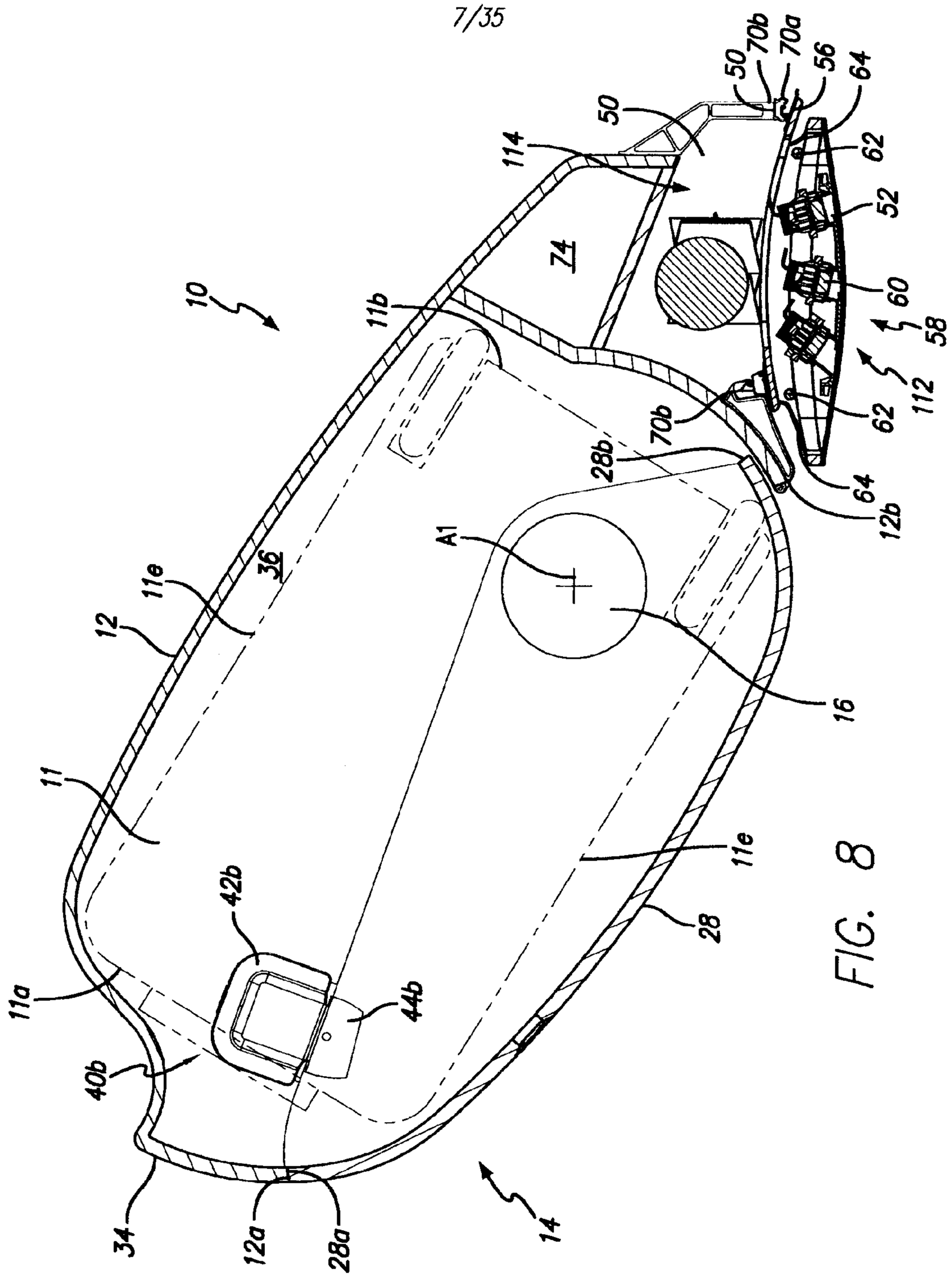
10
11b
114
50
70b
70a
56
64
62
52
74
60
58
112
62
64
12b
28b
A1
16
11e
36
12
11
42b
11a
40b
44b
34
12a
28a
14
28

FIG. 8

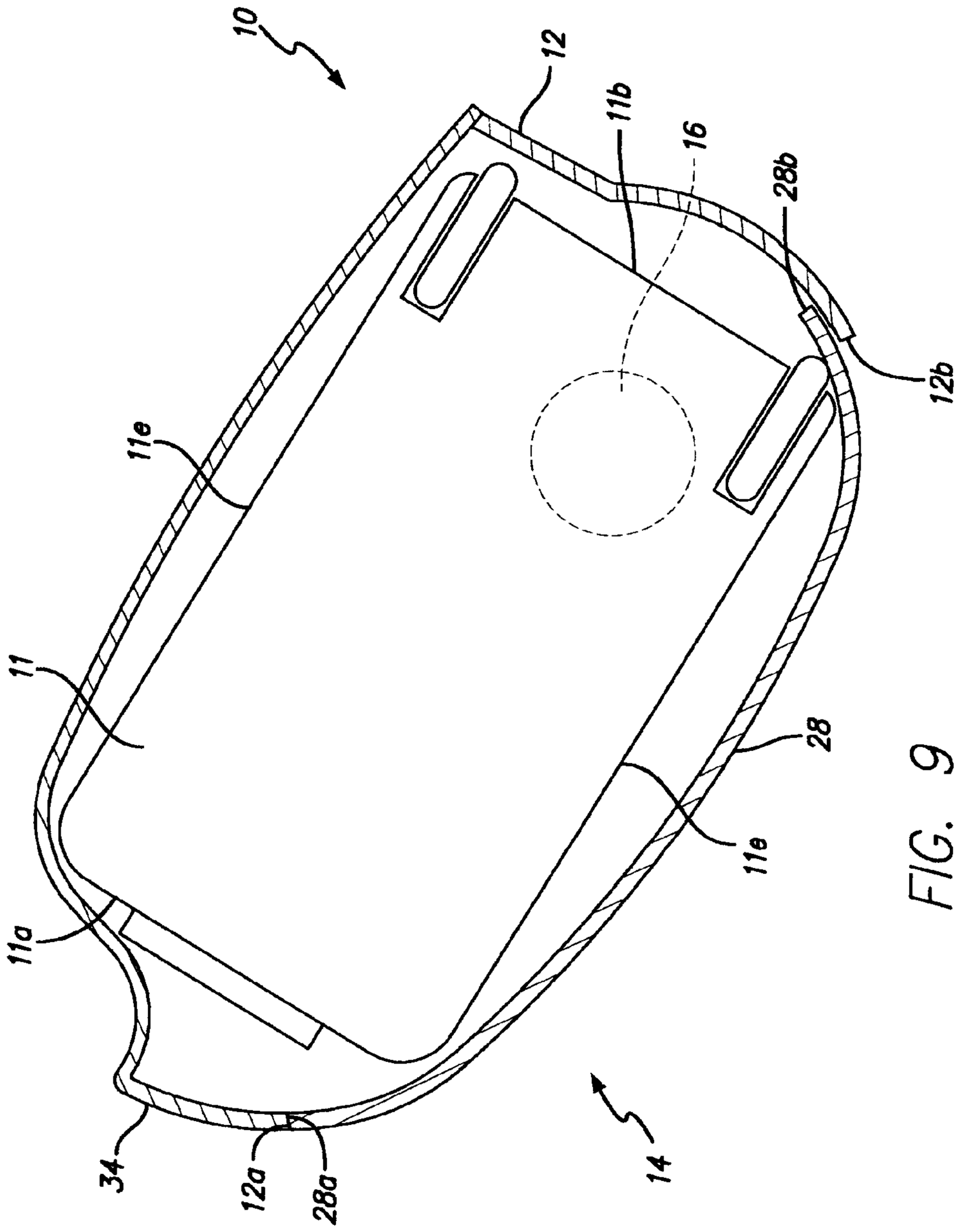

FIG. 9

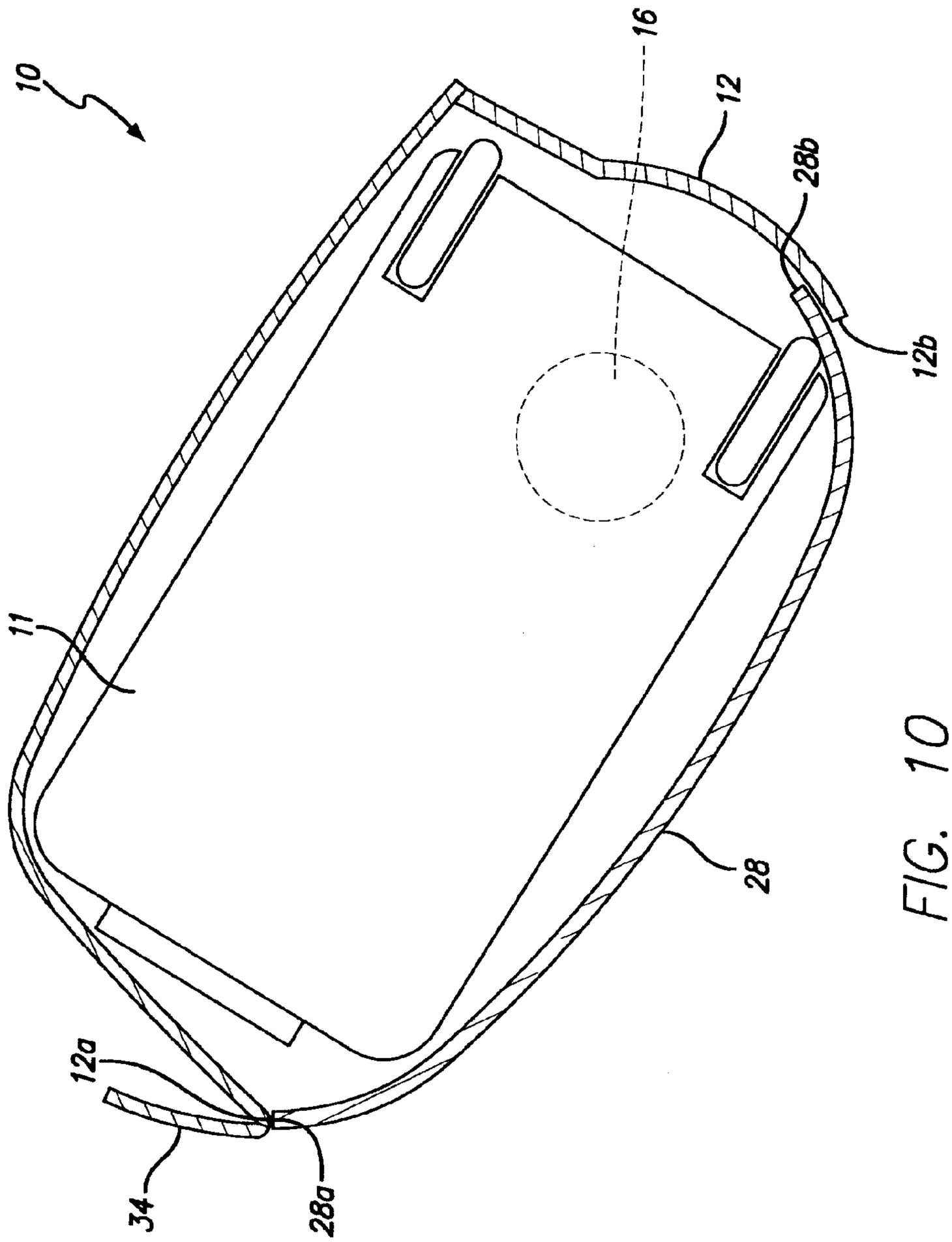

FIG. 10

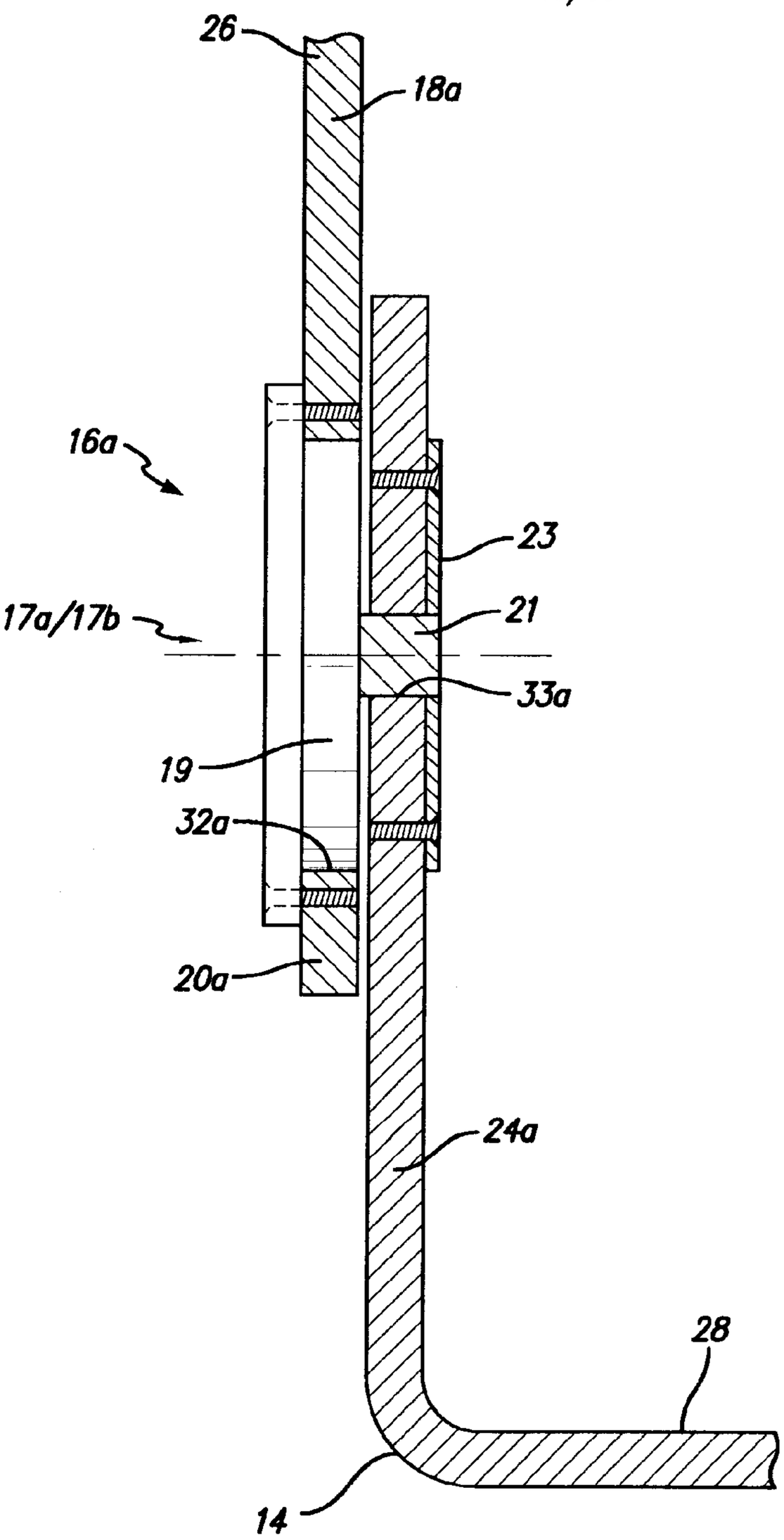

FIG. 11

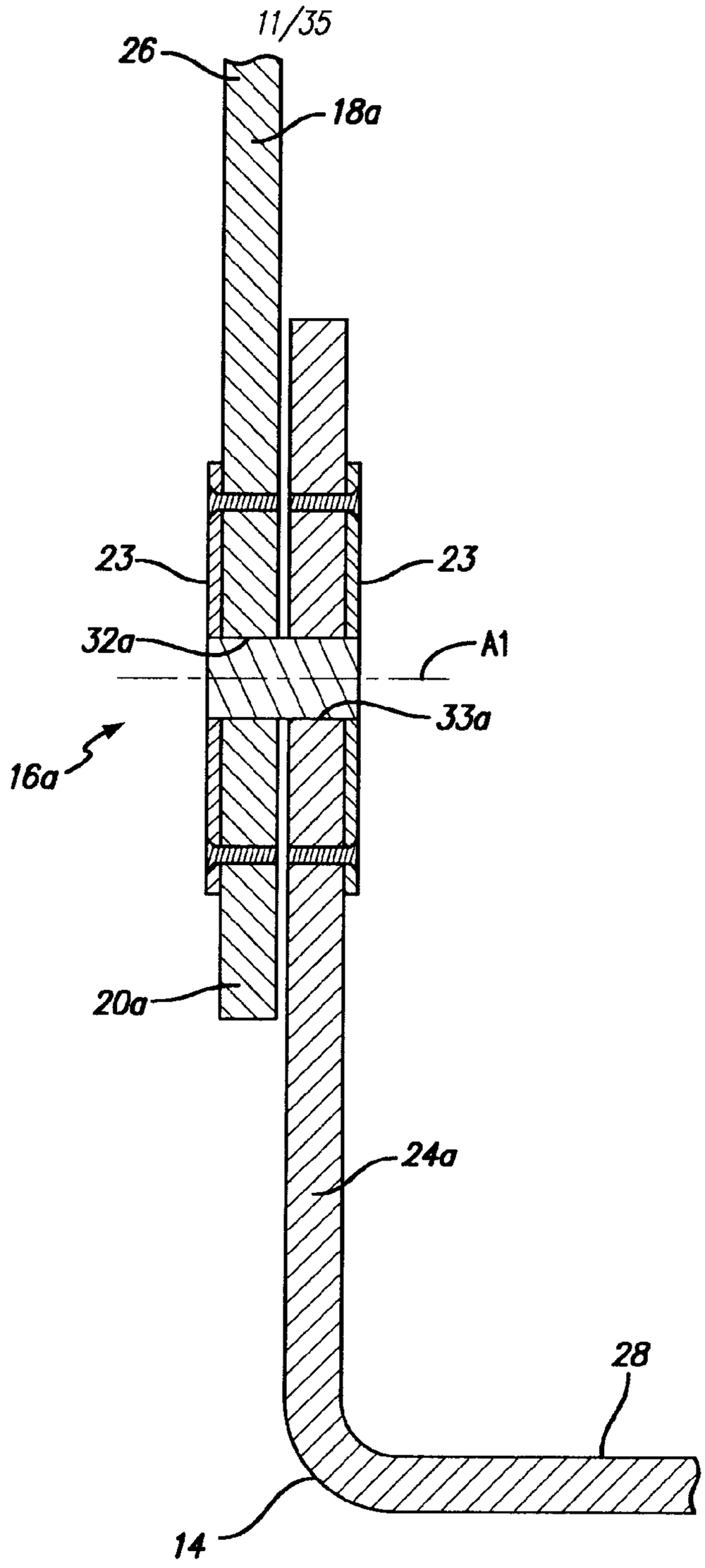

FIG. 12

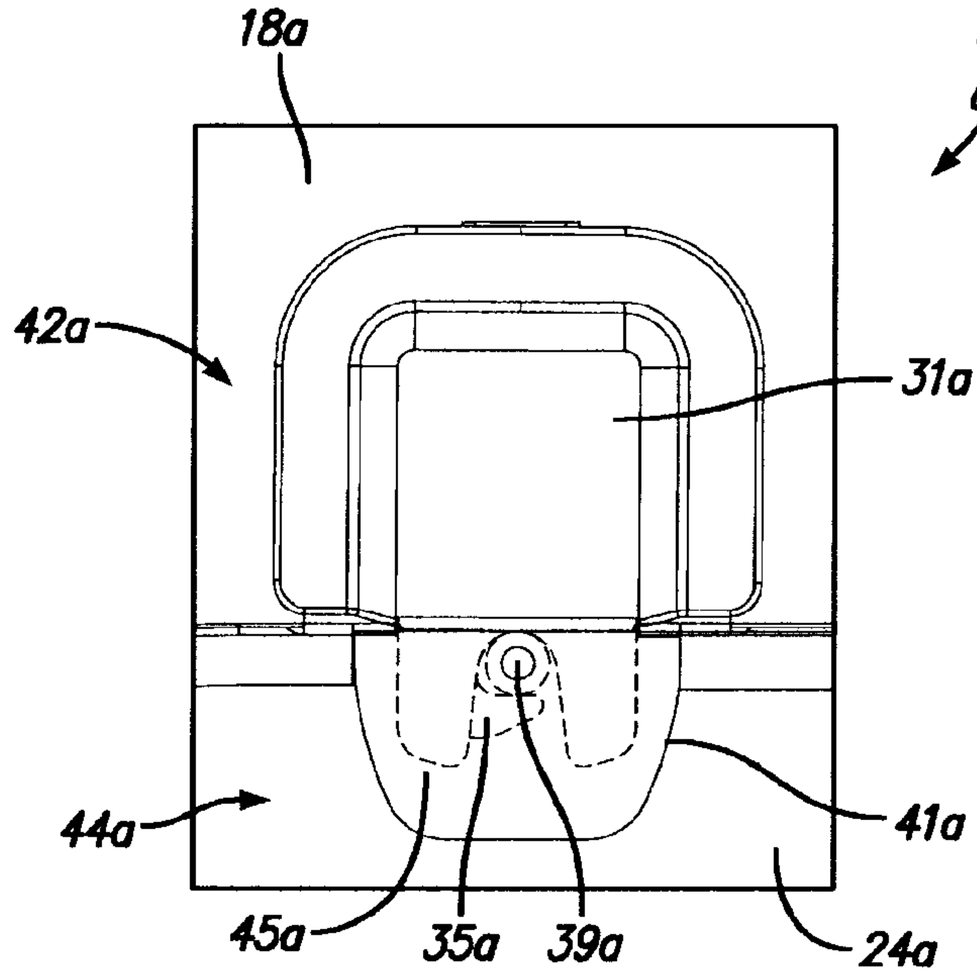

FIG. 13

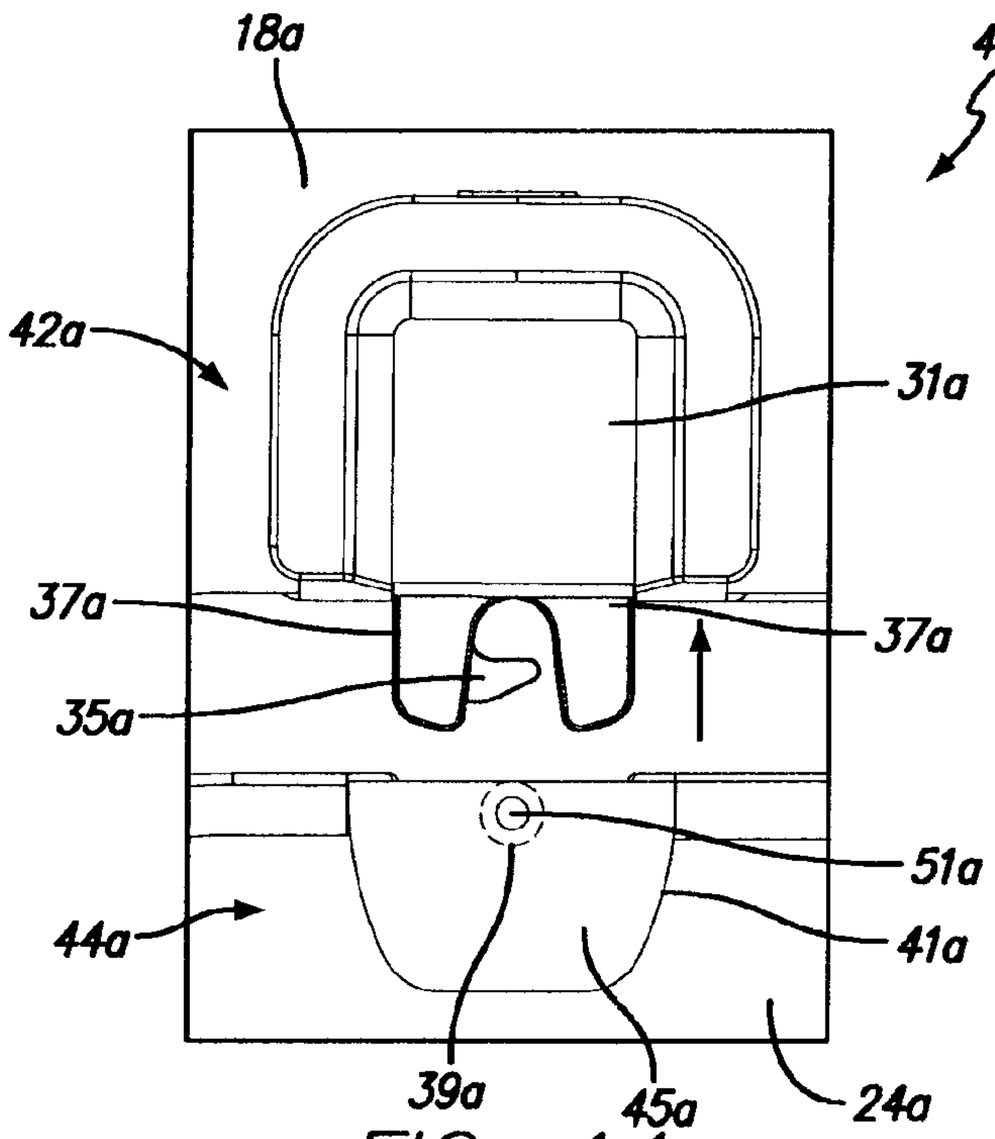

FIG. 14

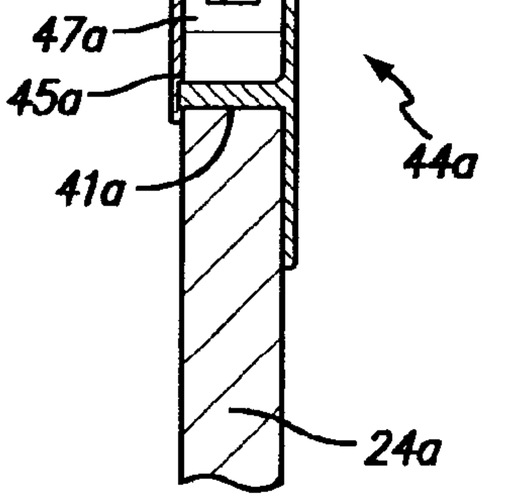

FIG. 15

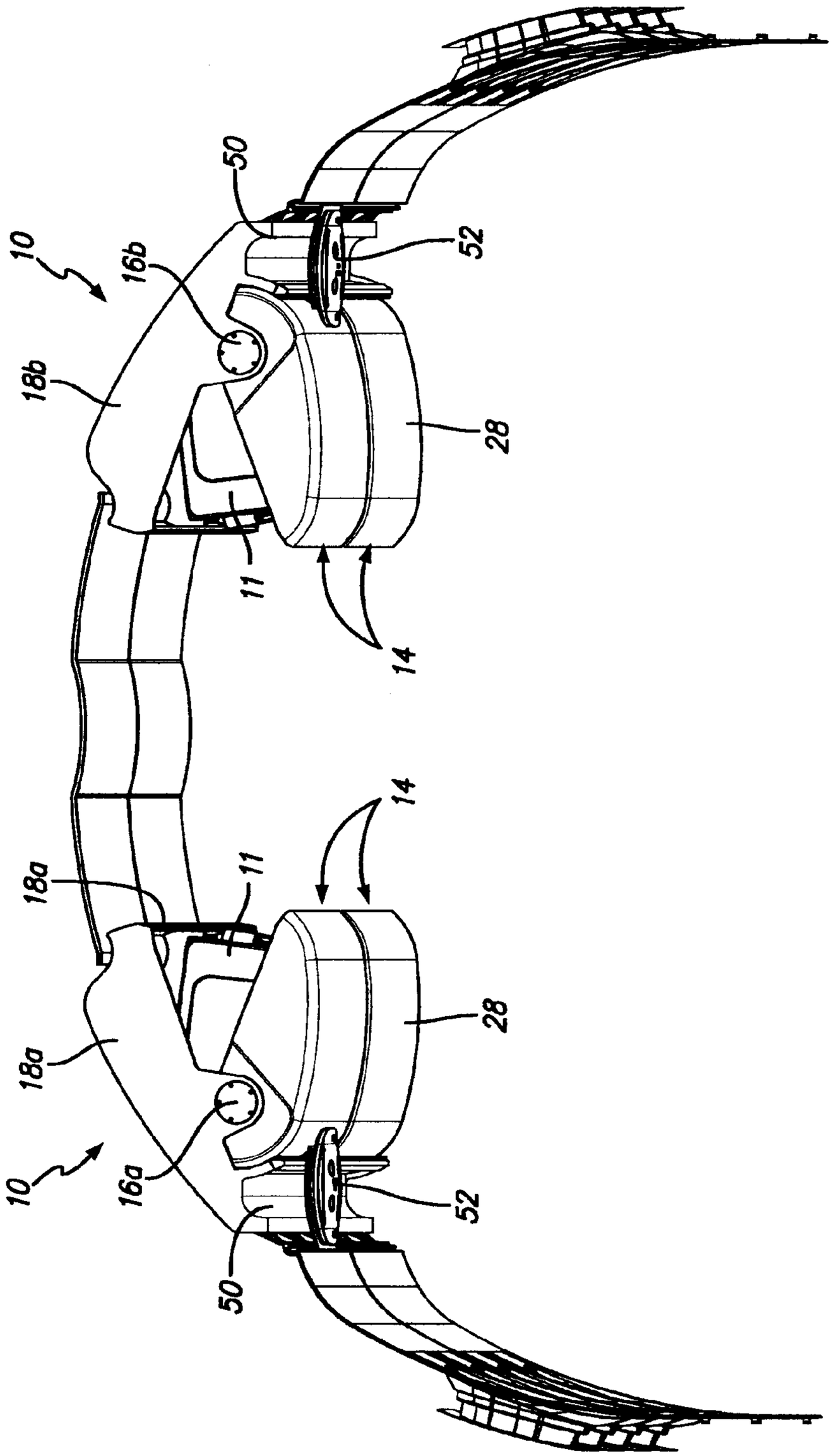

FIG. 16

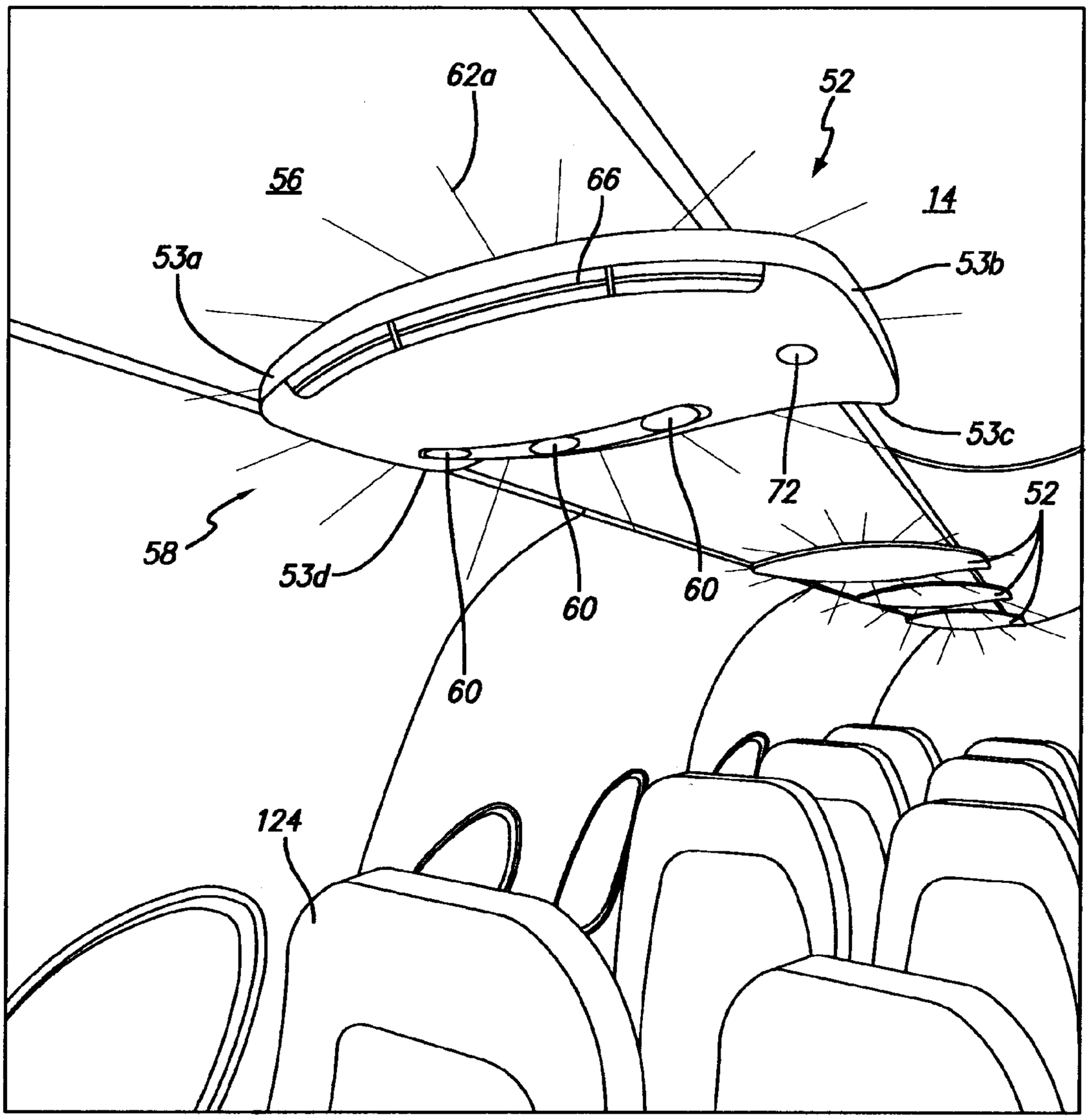

FIG. 17A

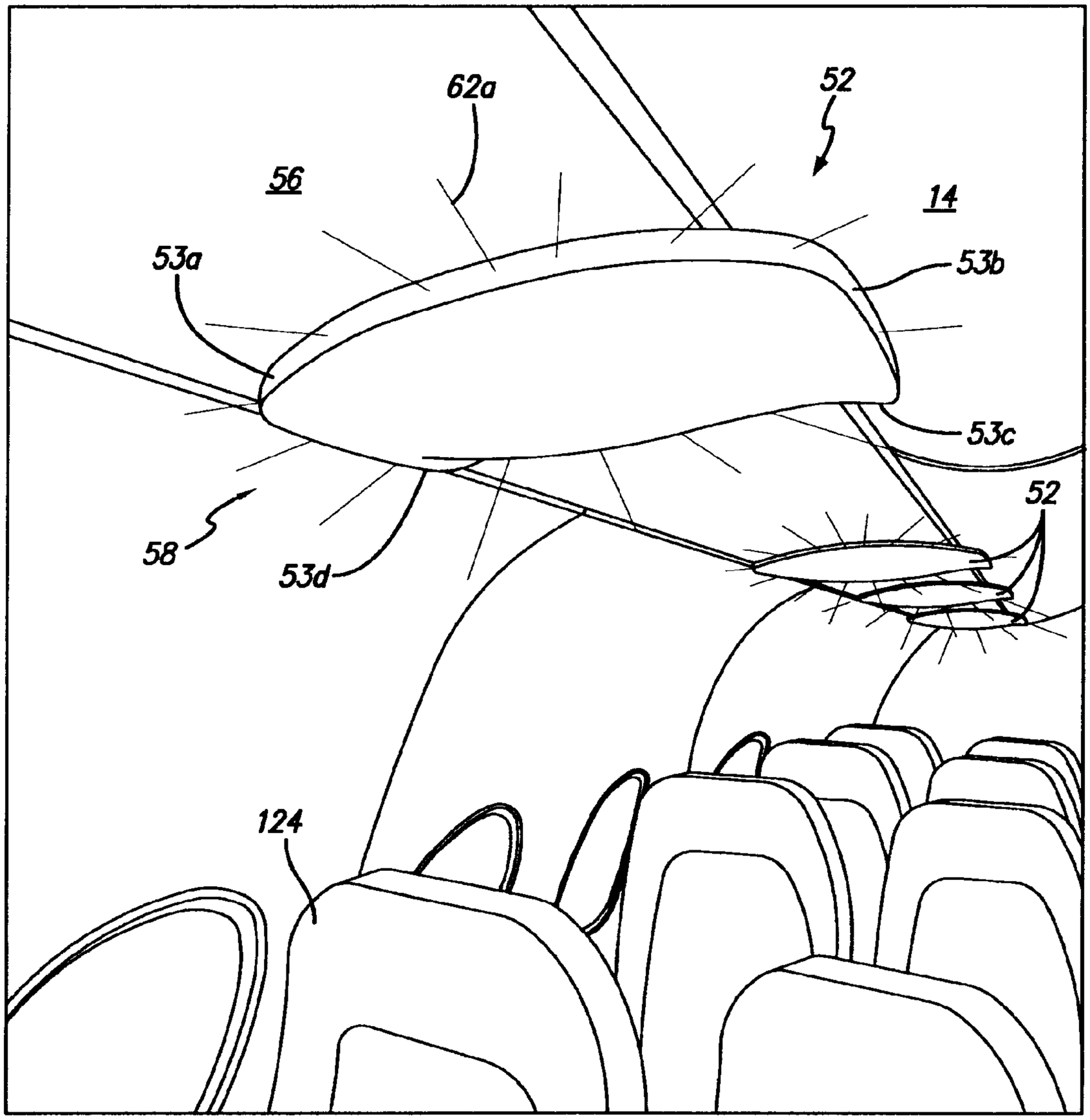

FIG. 17B

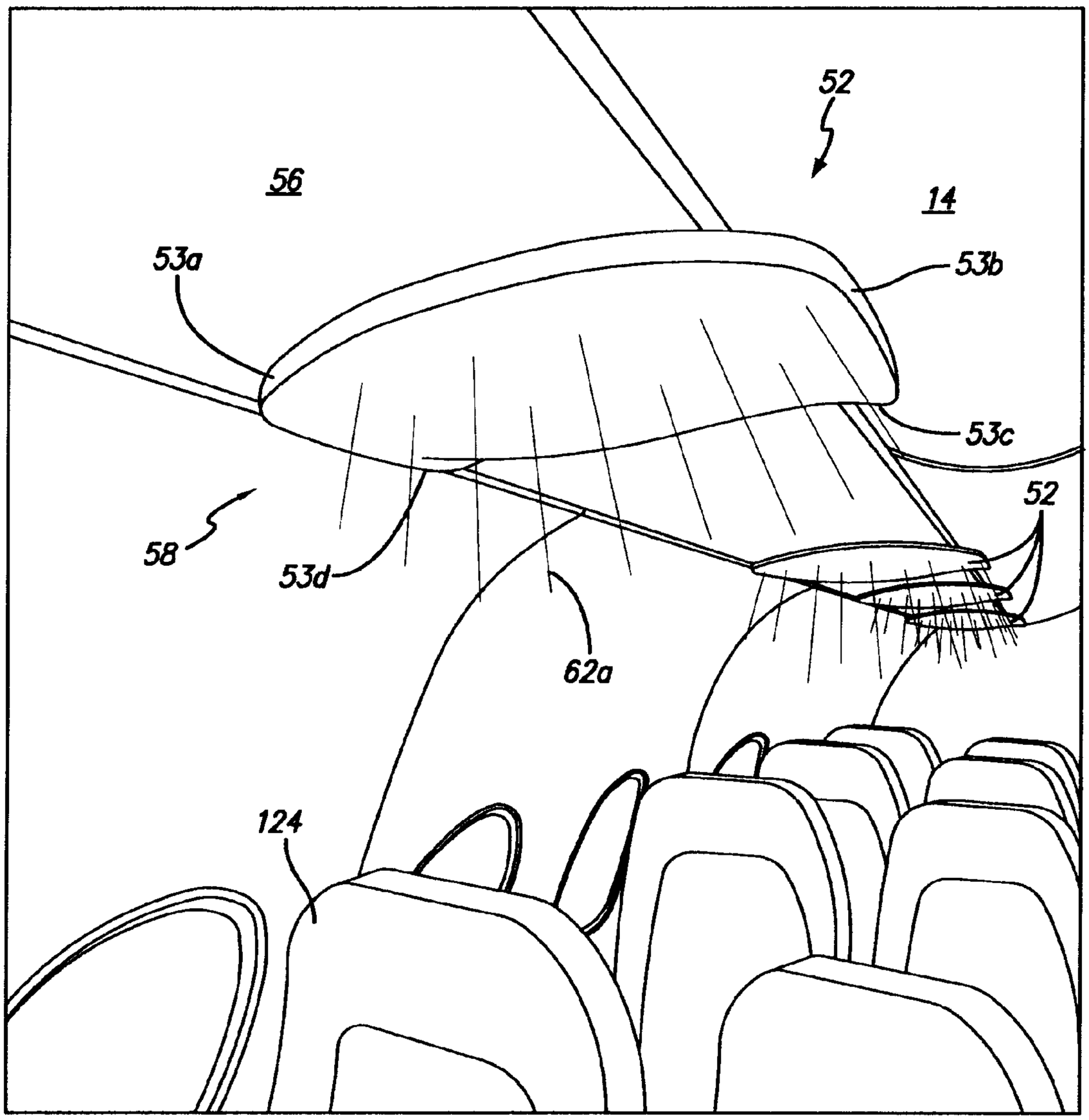

FIG. 17C

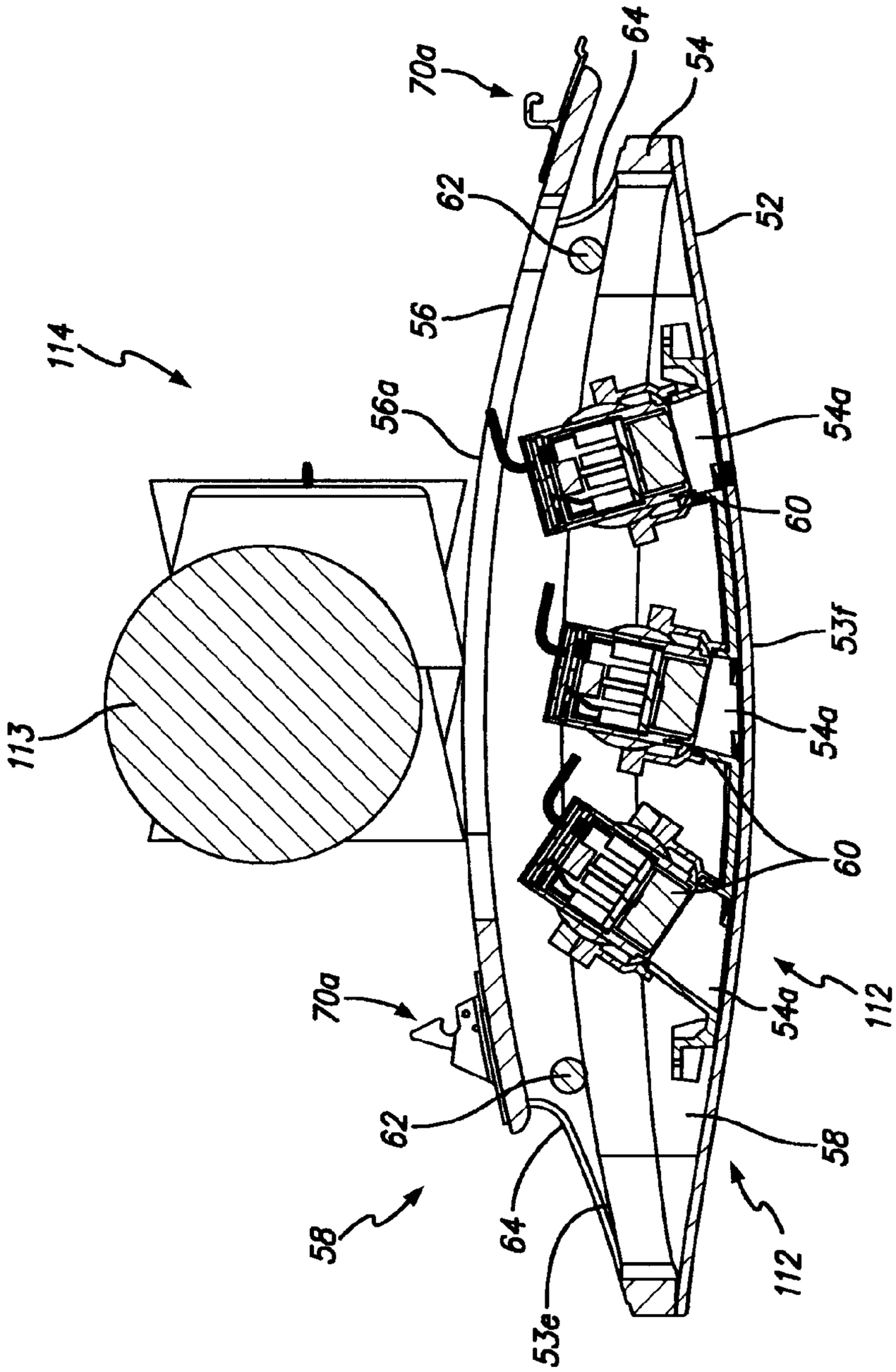
70a
64
54
62
52
56
114
56a
54a
60
113
53f
54a
60
70a
54a
112
62
58
64
58
112
53e

FIG. 18

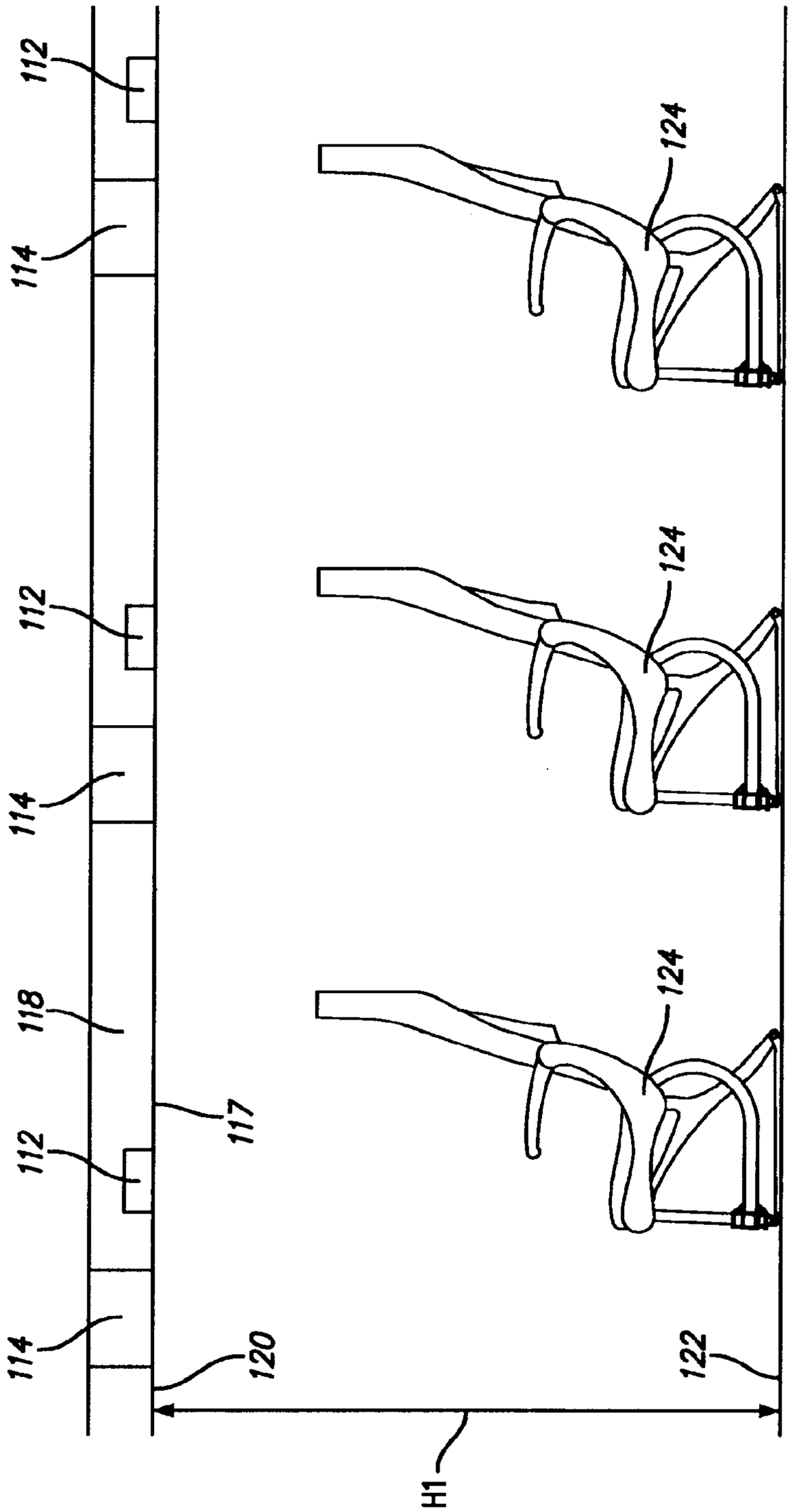

FIG. 19A

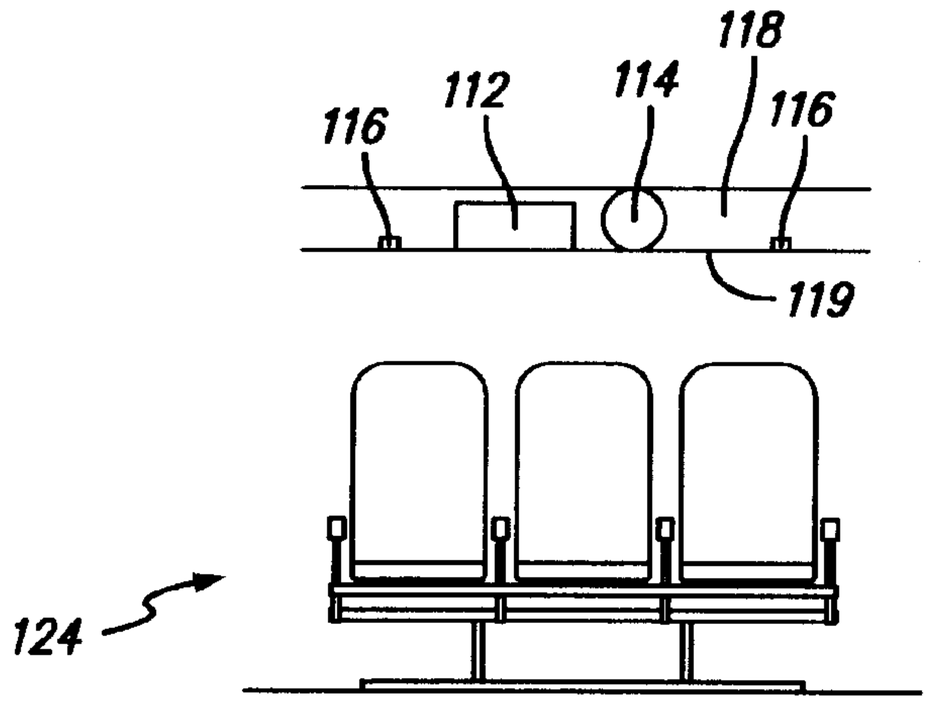

FIG. 19B

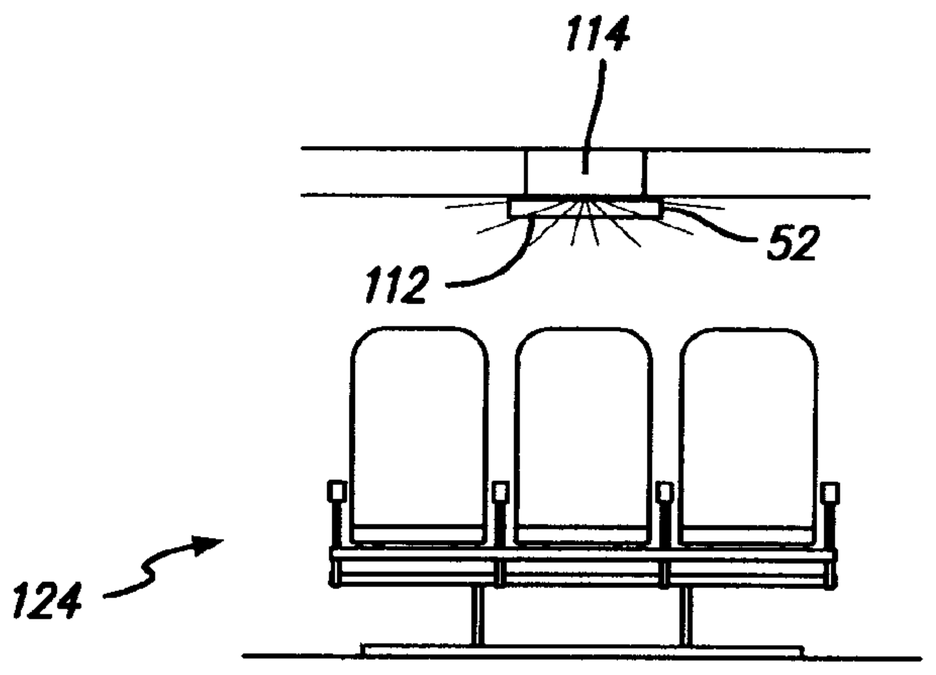

FIG. 20A

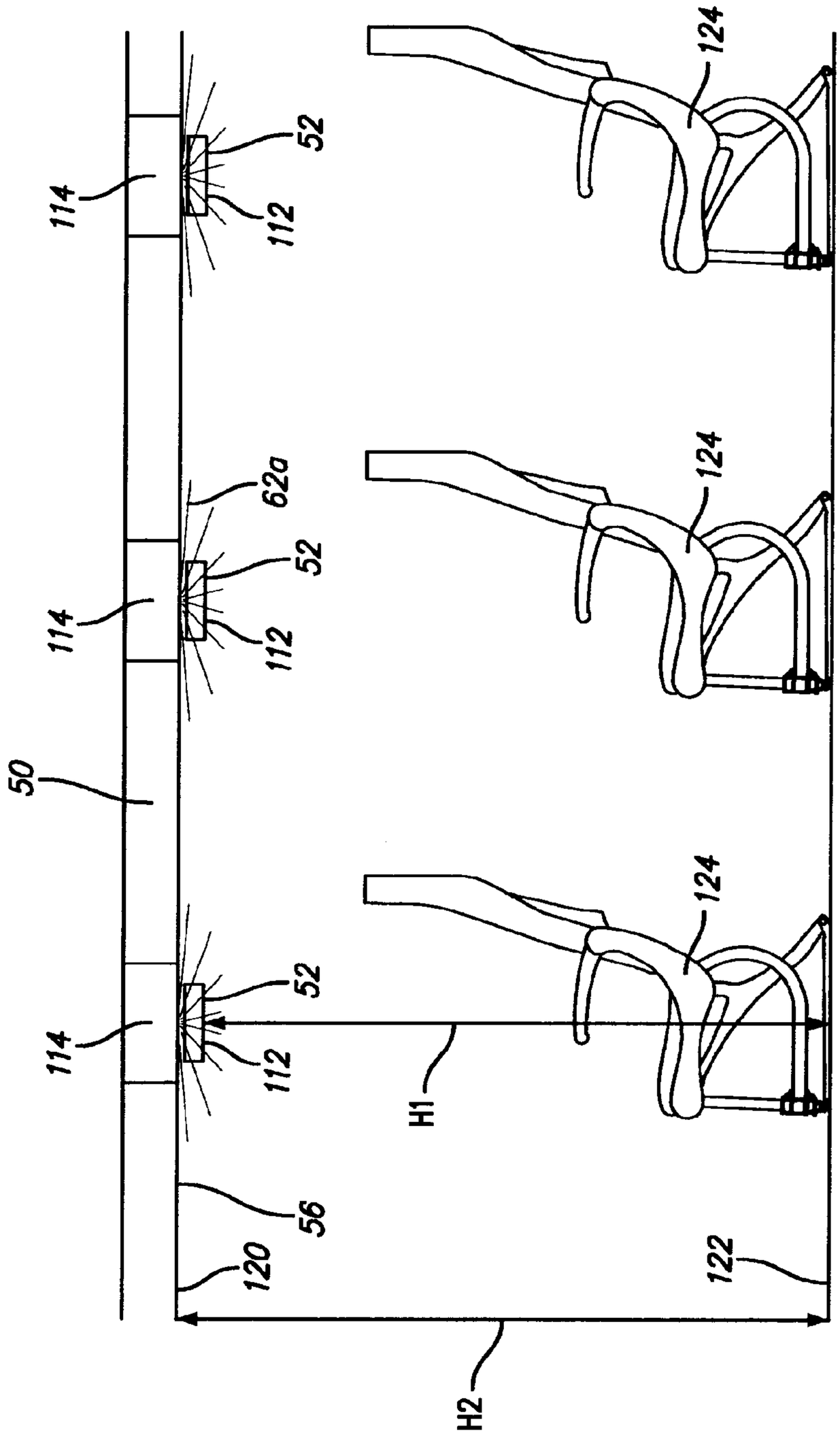

FIG. 20B

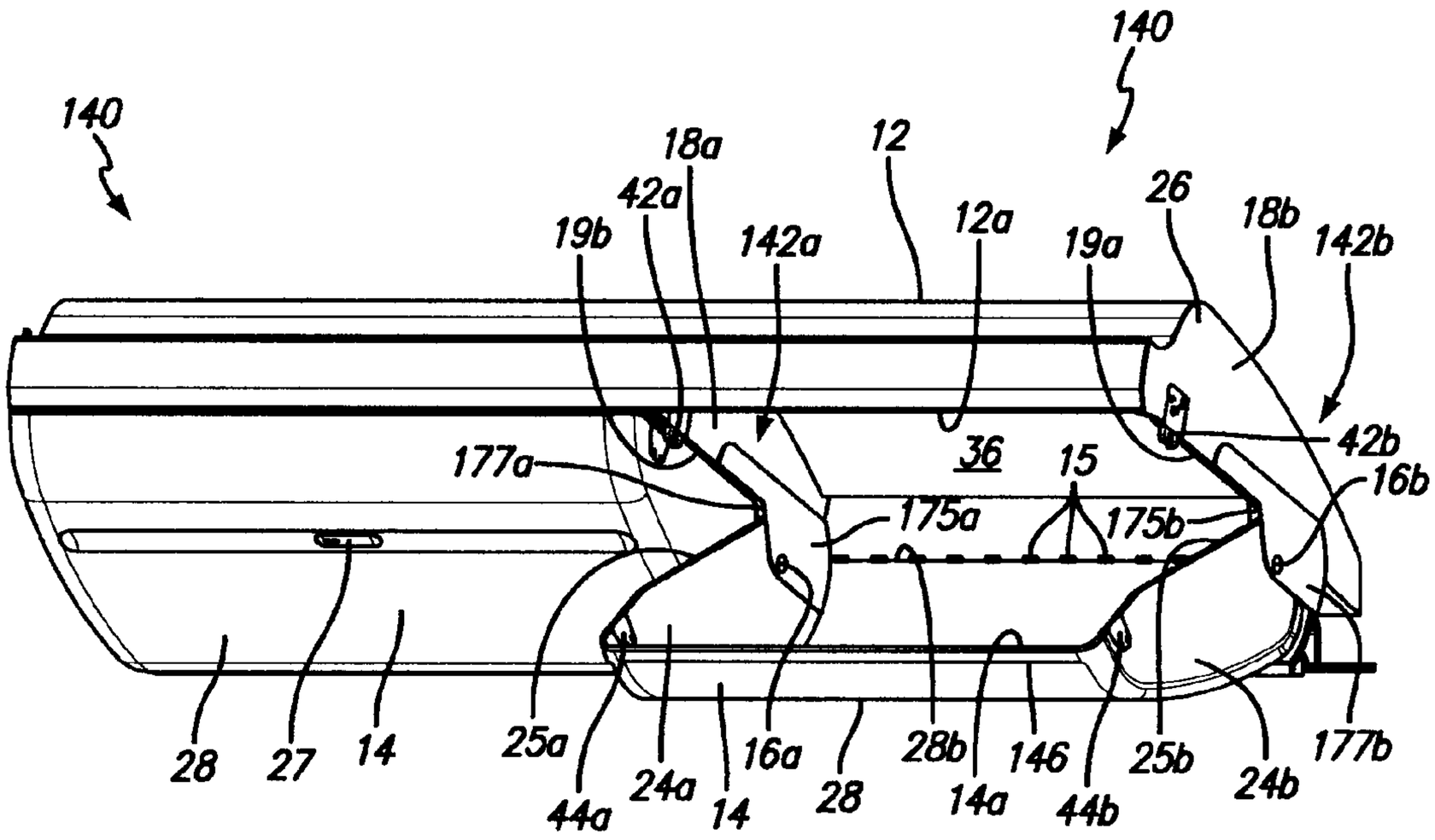
140
140
18a
42a
19b
142a
12
12a
19a
26
18b
142b
42b
16b
177a
36
15
175a
175b
28
27
14
25a
44a
24a
14
16a
28
28b
14a
146
44b
25b
24b
177b

FIG. 21

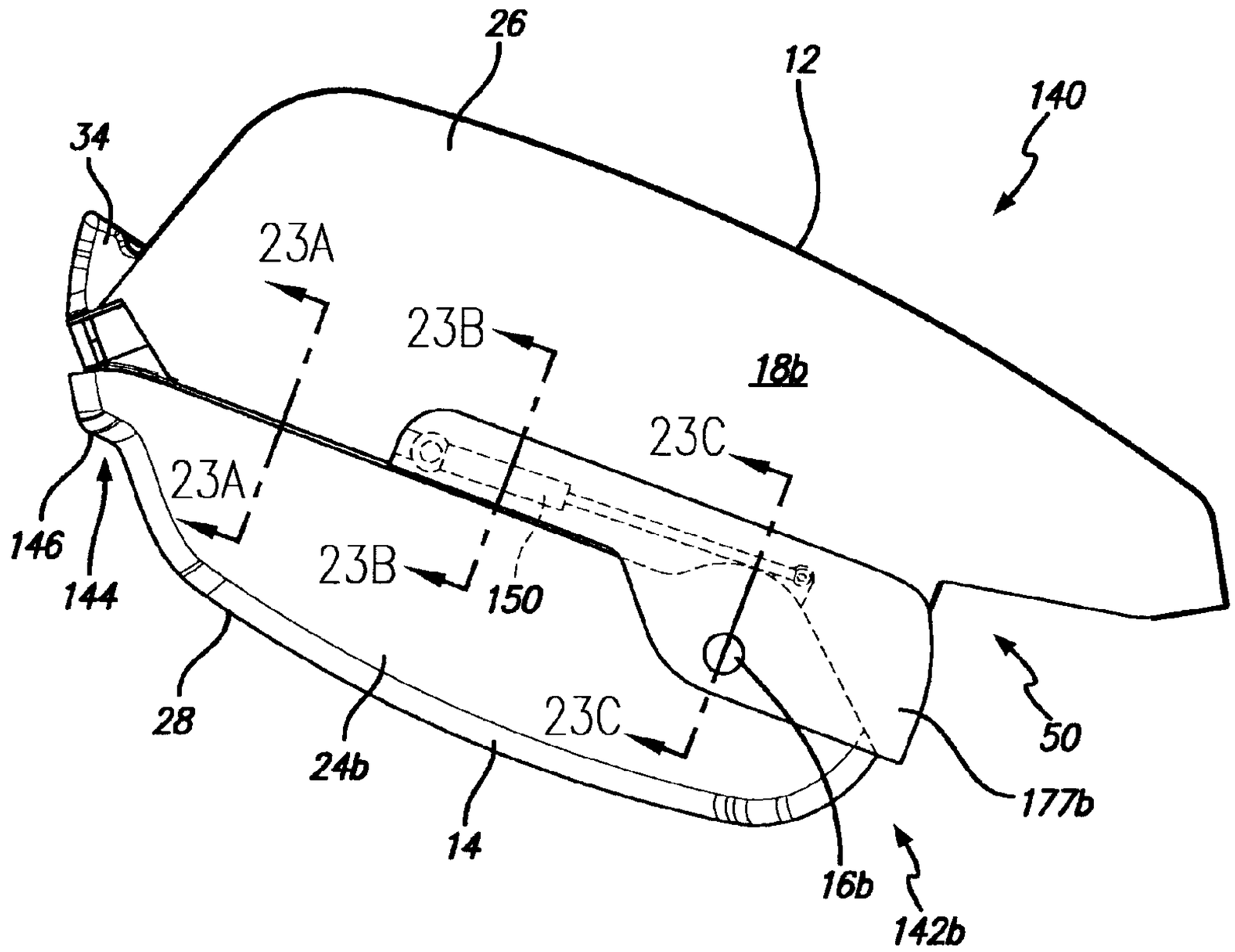
26
12
140
34
23A
23B
18b
23C
23A
146
144
23B
150
28
24b
23C
50
177b
14
16b
142b

FIG. 22

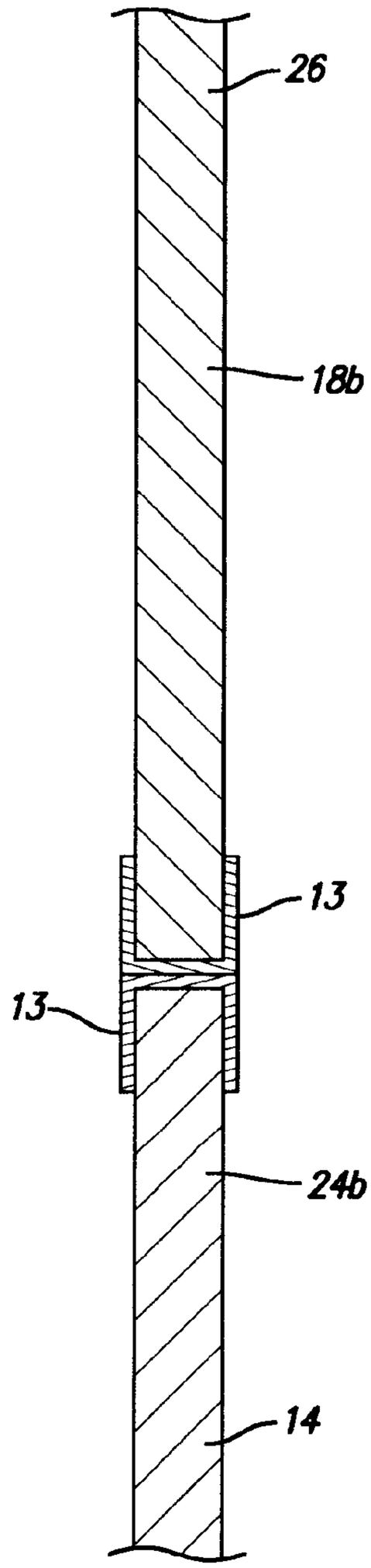

FIG. 23A

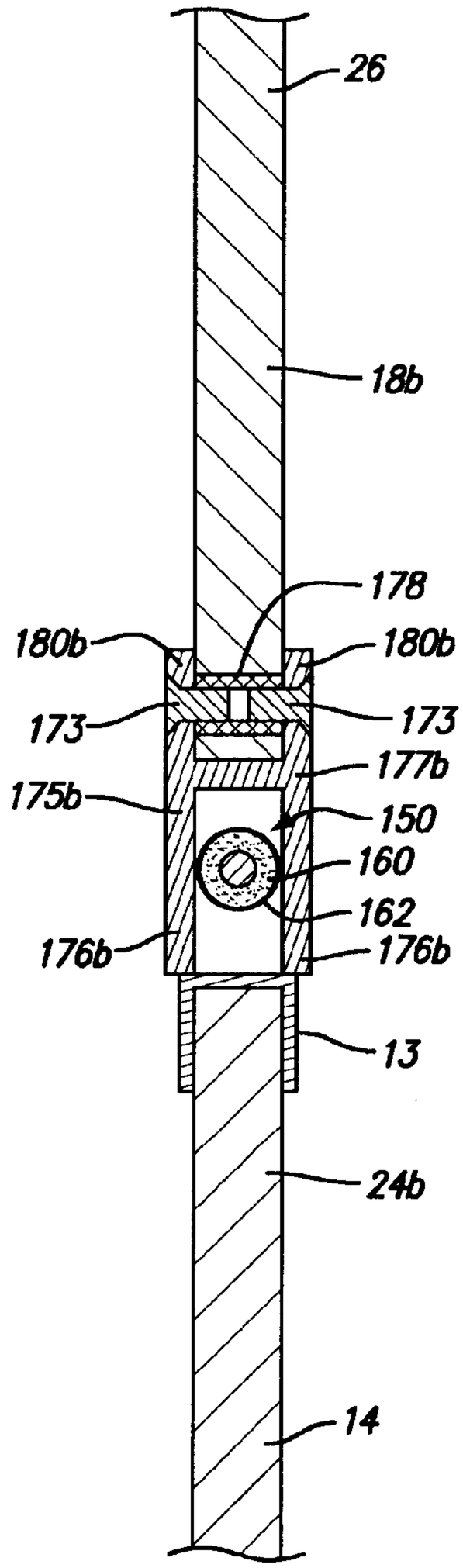

FIG. 23B

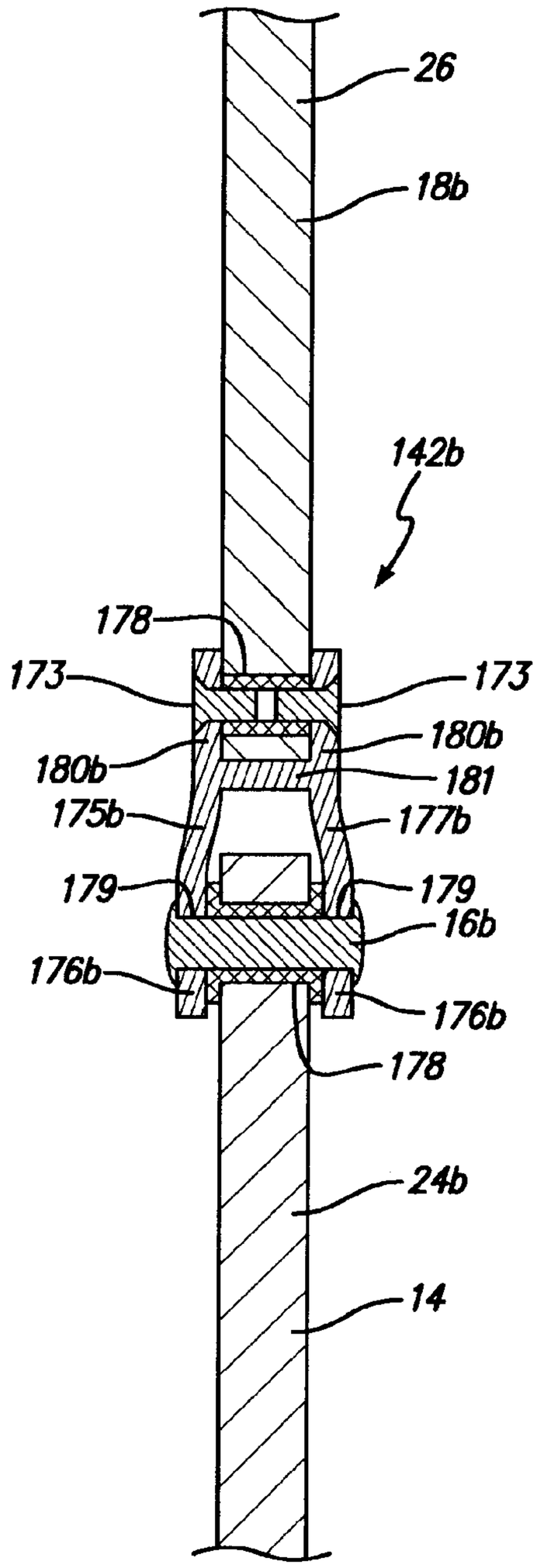

FIG. 23C

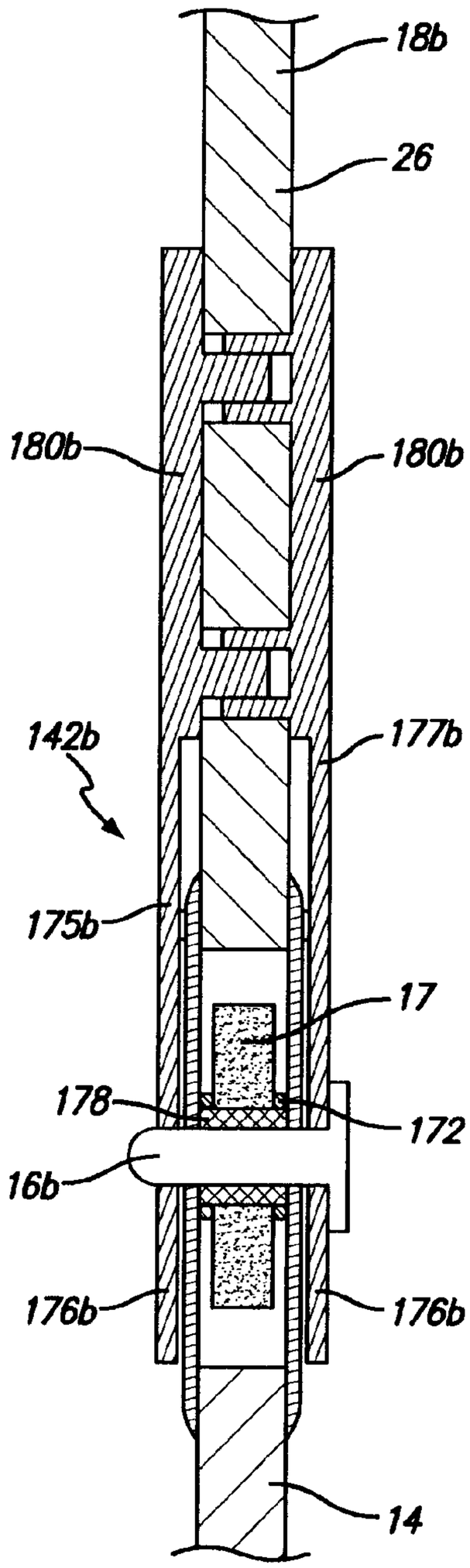

FIG. 23D

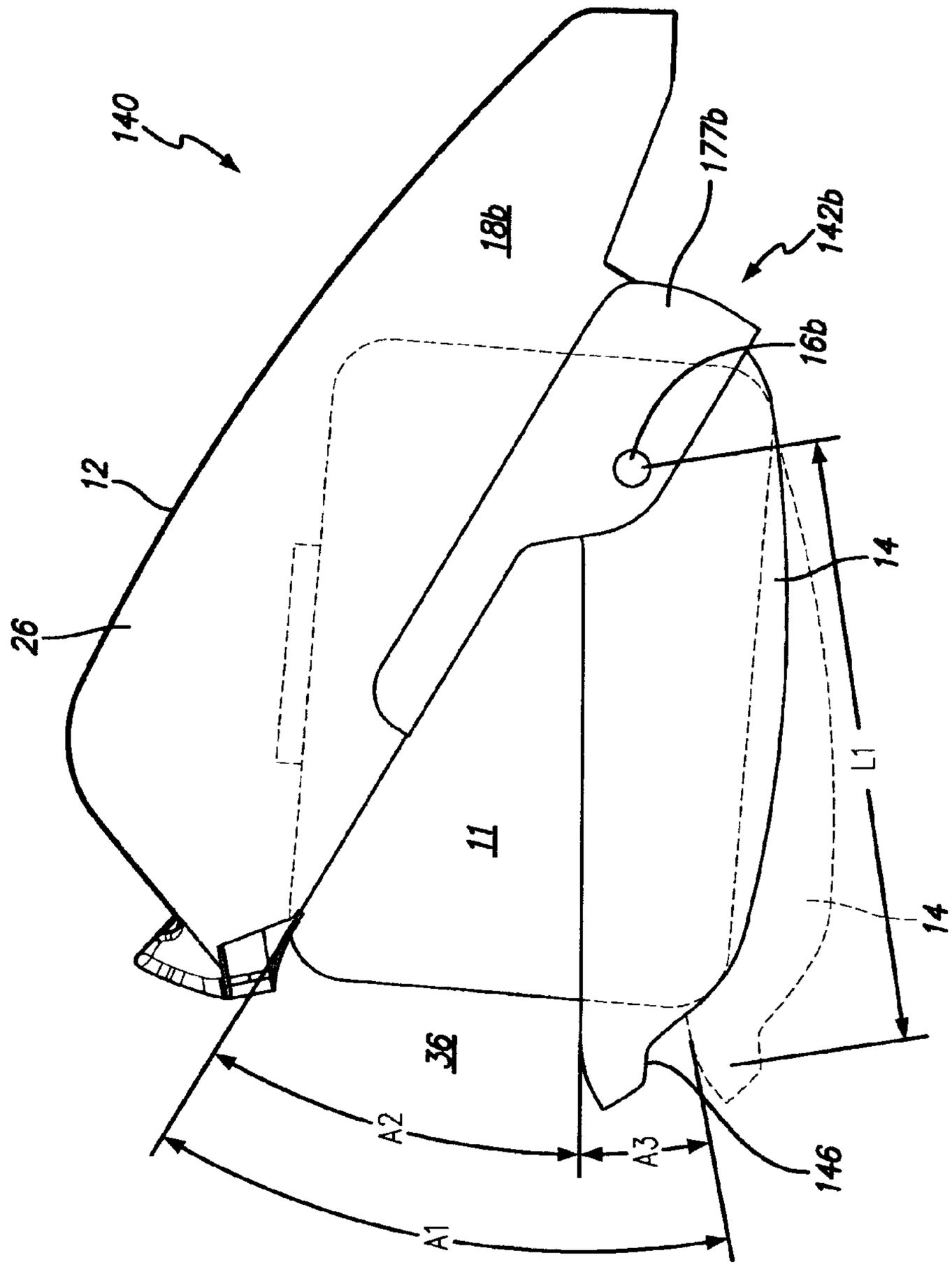

FIG. 24

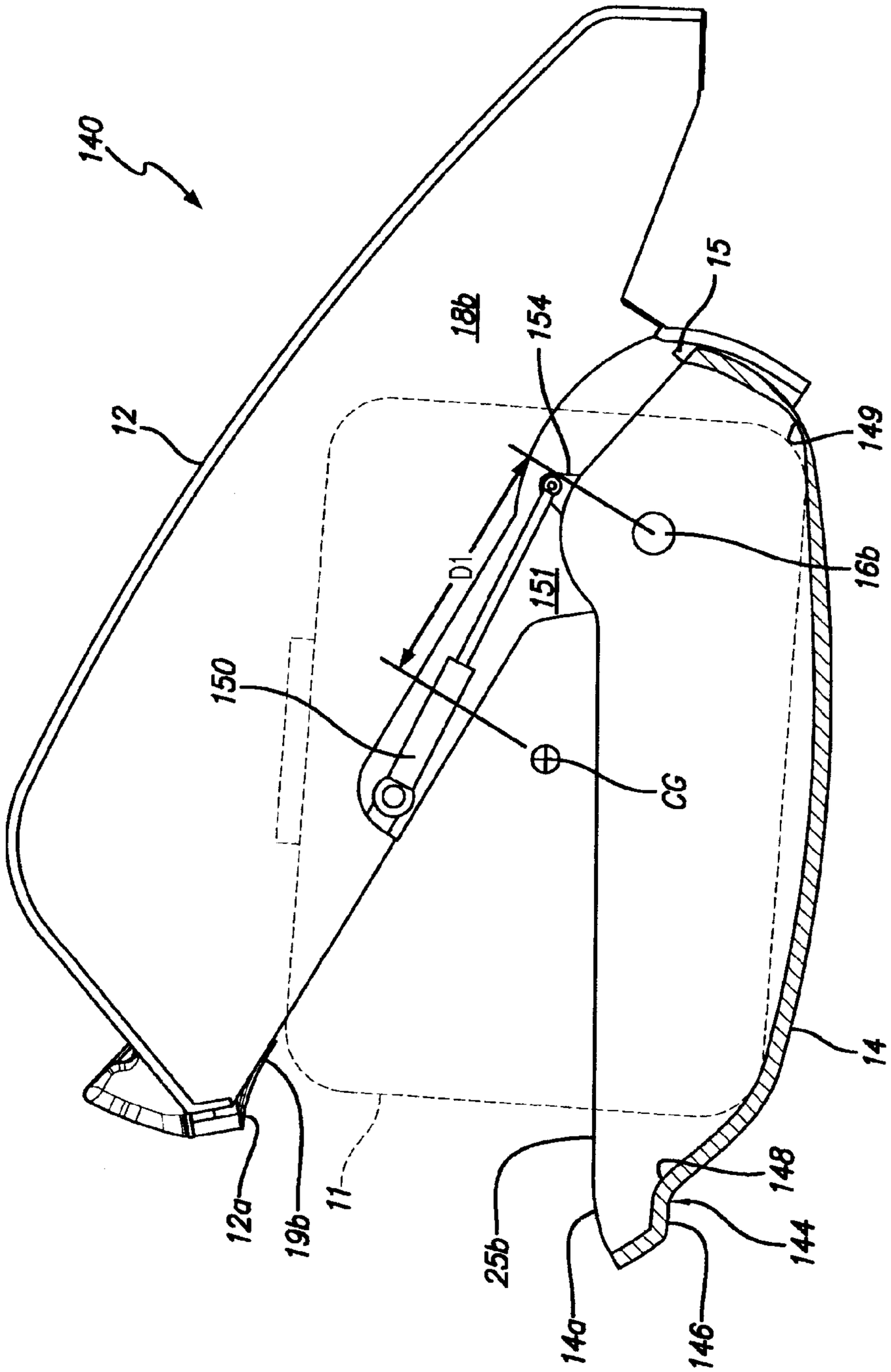
140
12
18b
154
15
149
16b
D1
151
150
CG
12a
19b
11
25b
14a
146
148
144
14

FIG. 25A

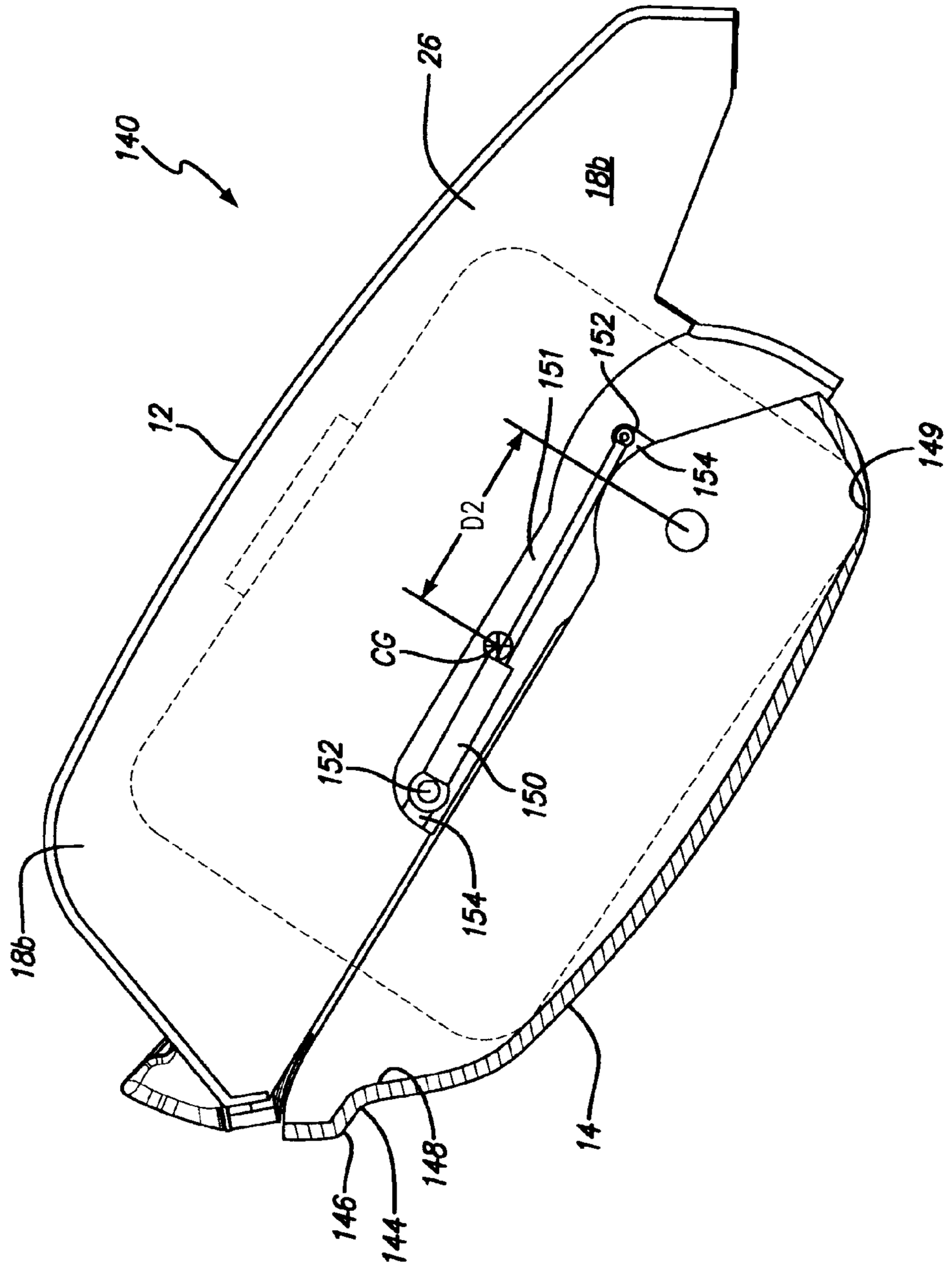

FIG. 25B

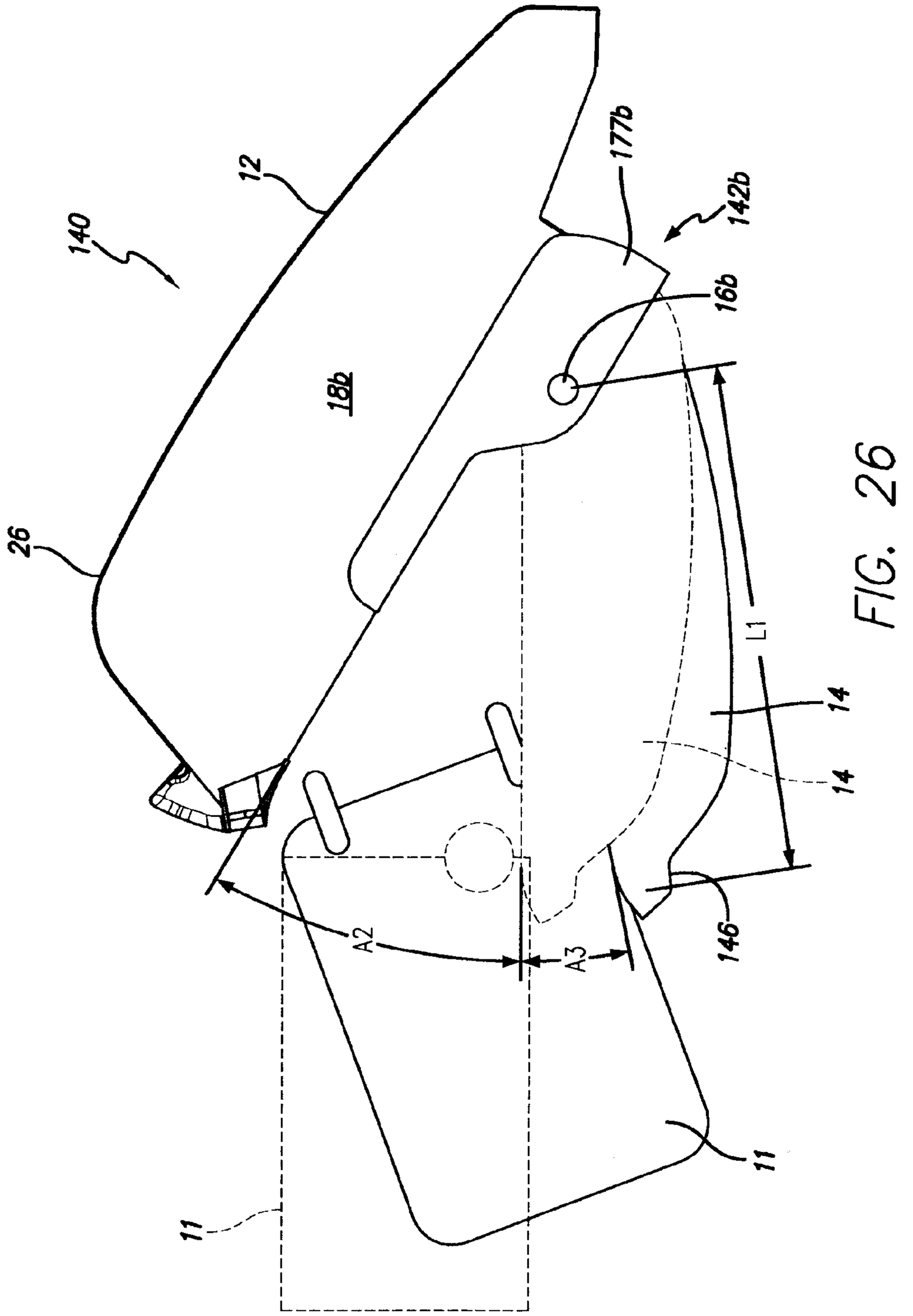

FIG. 26

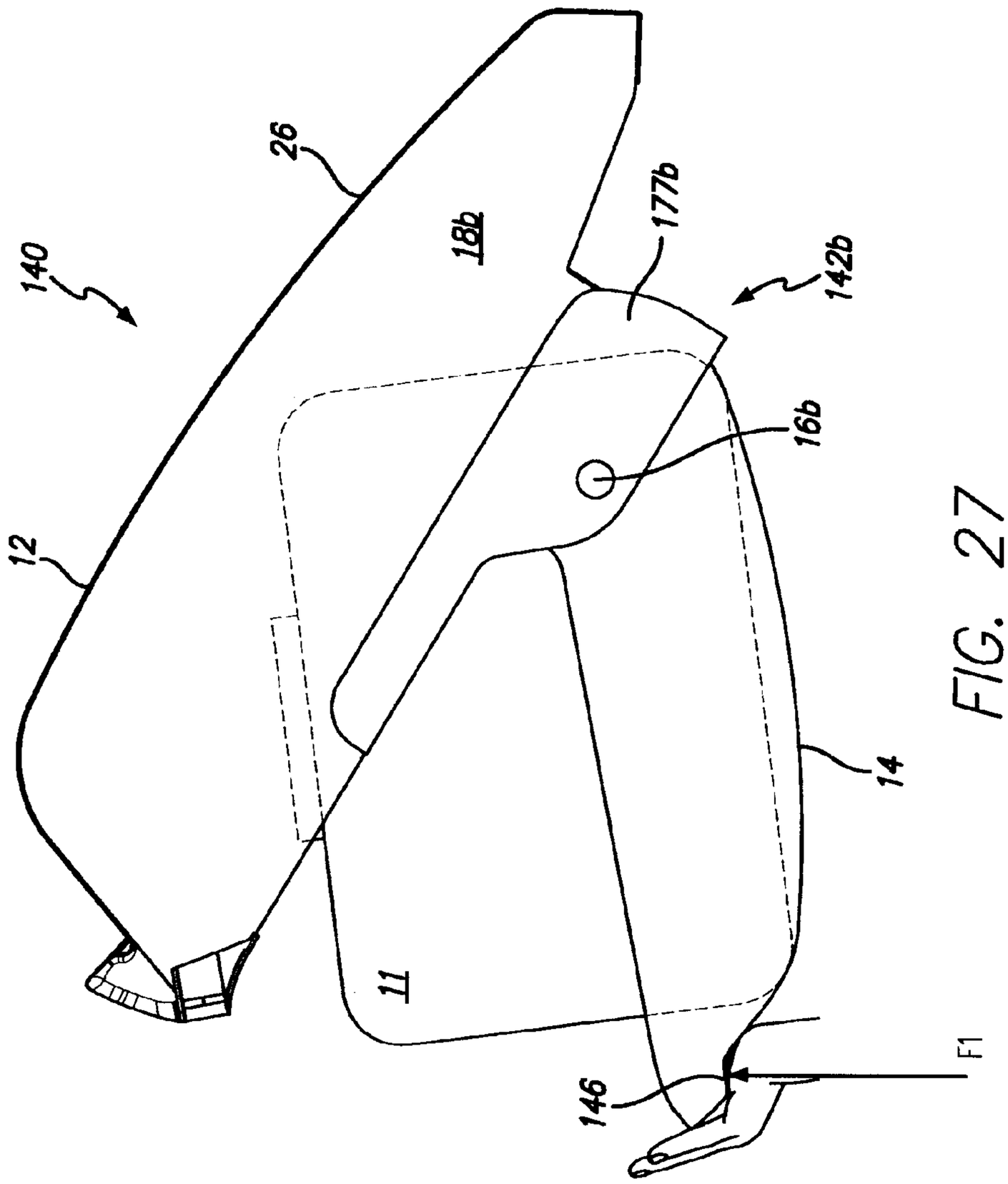

FIG. 27

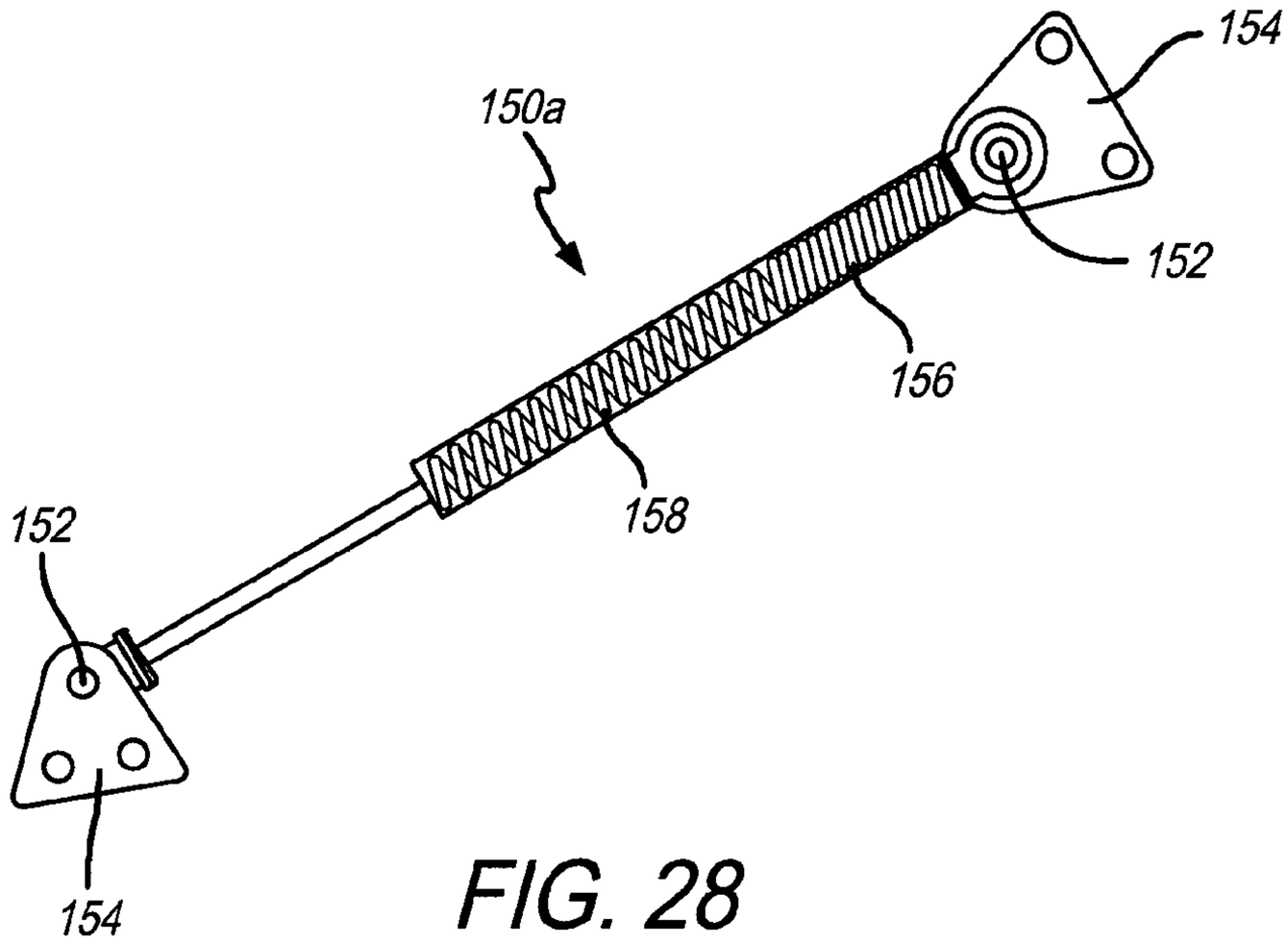

FIG. 28

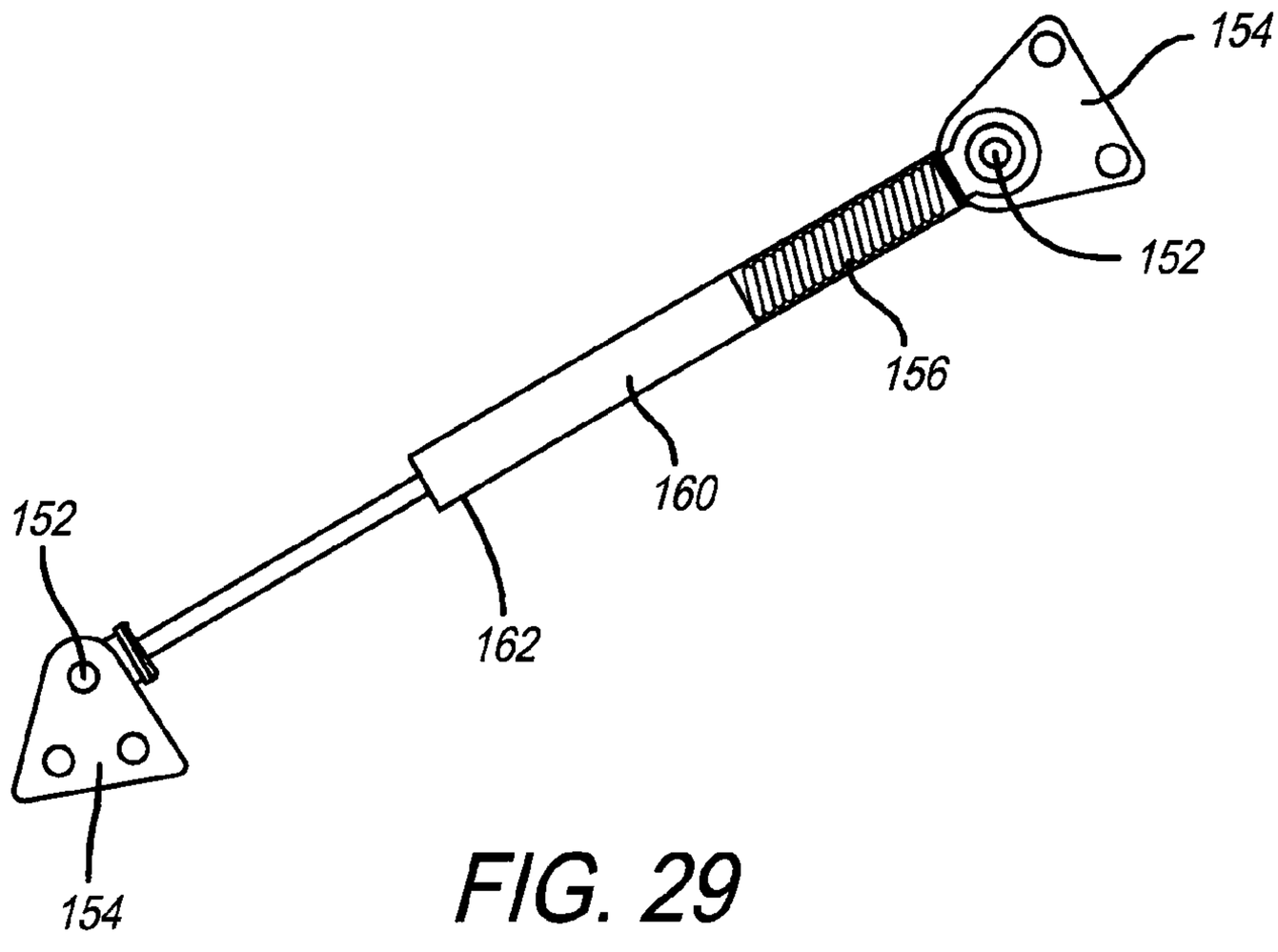

FIG. 29

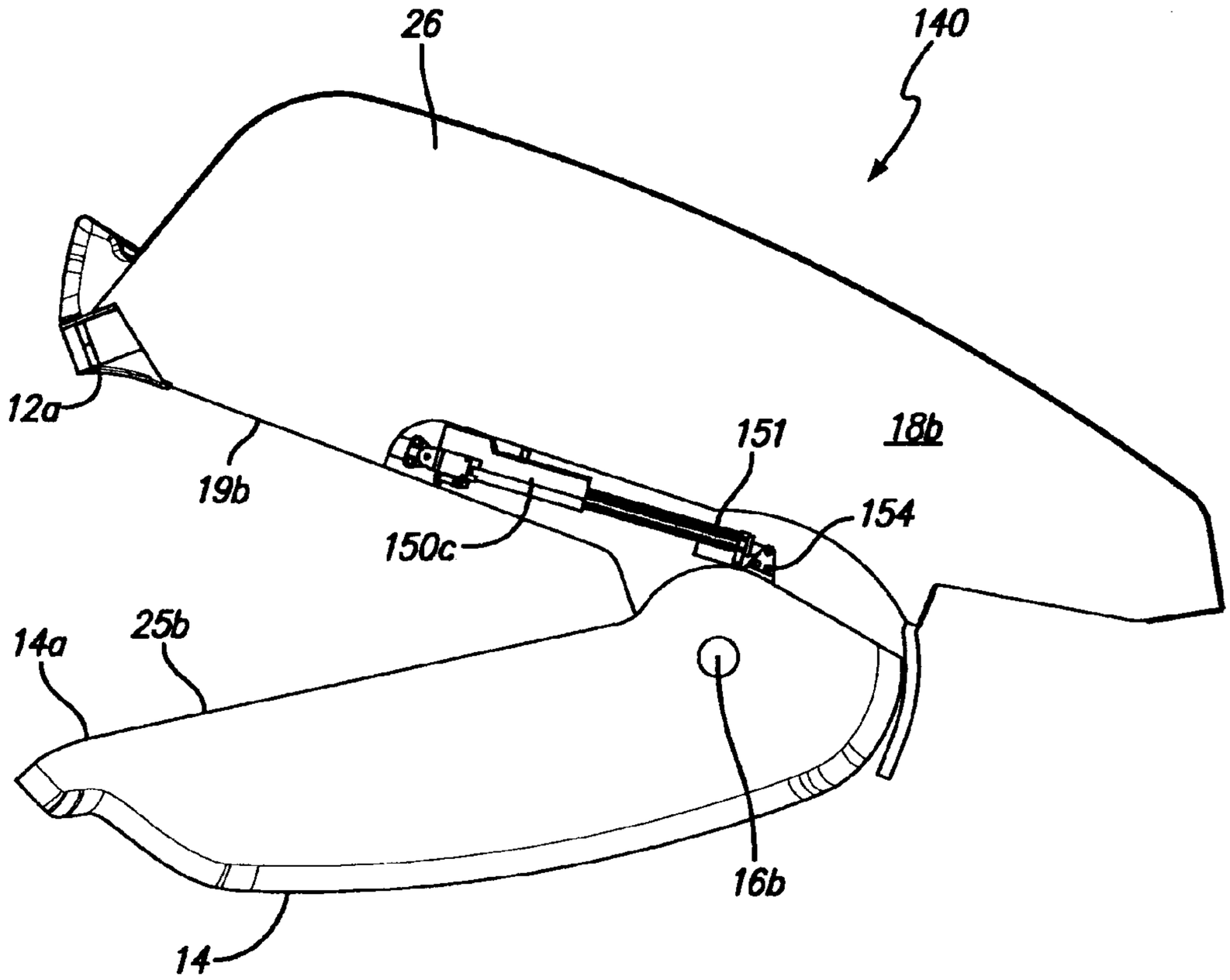

FIG. 30

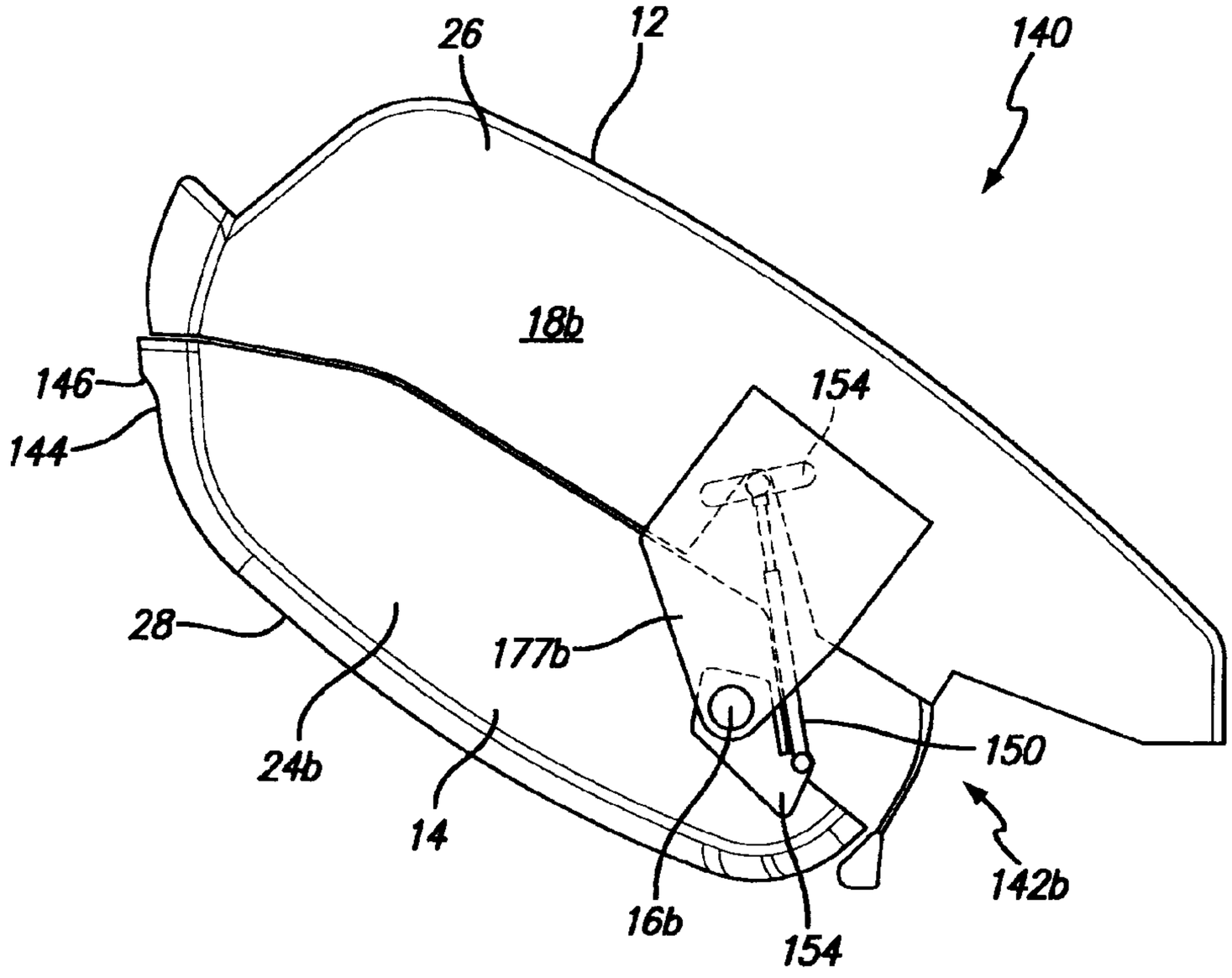

FIG. 31

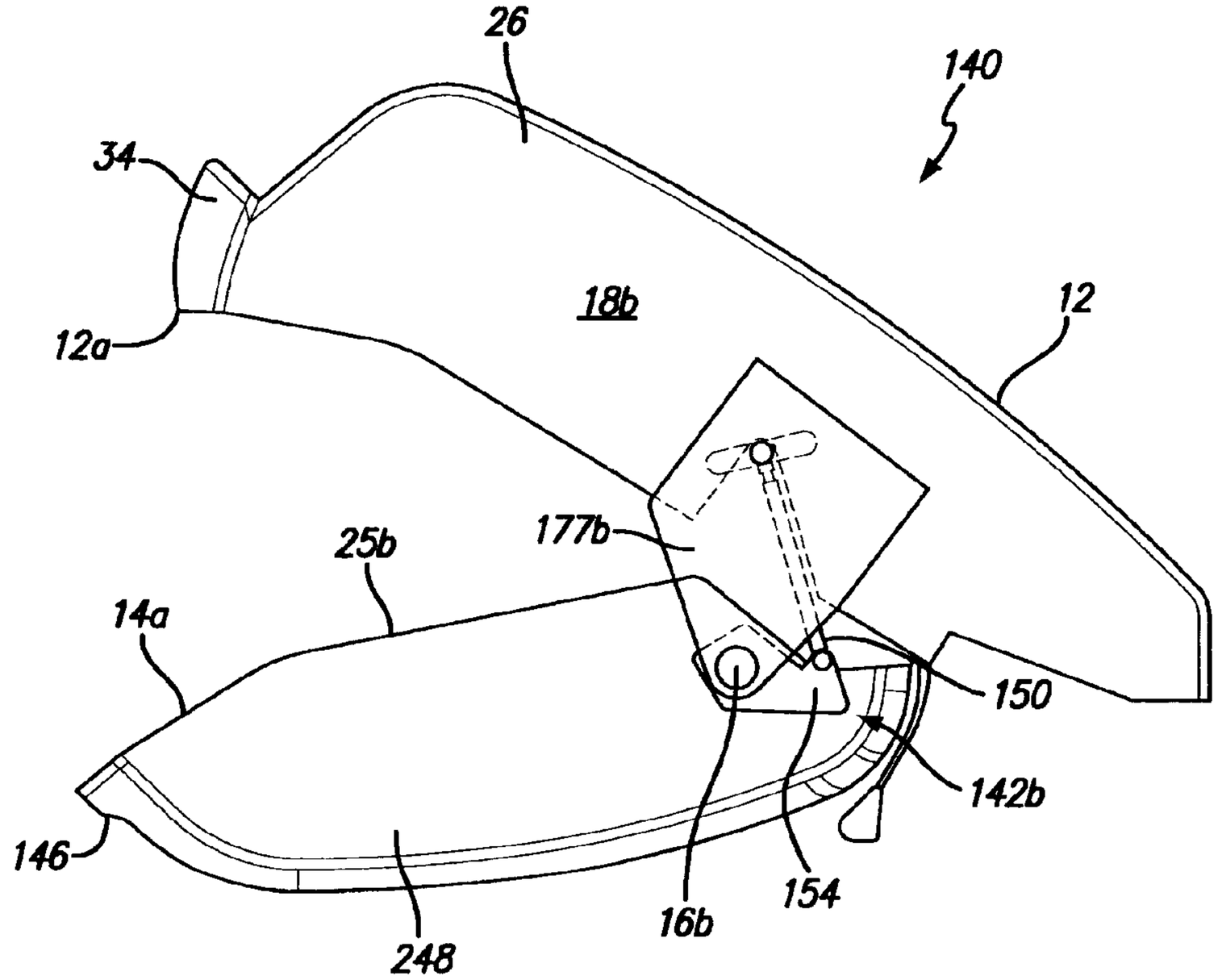

FIG. 32

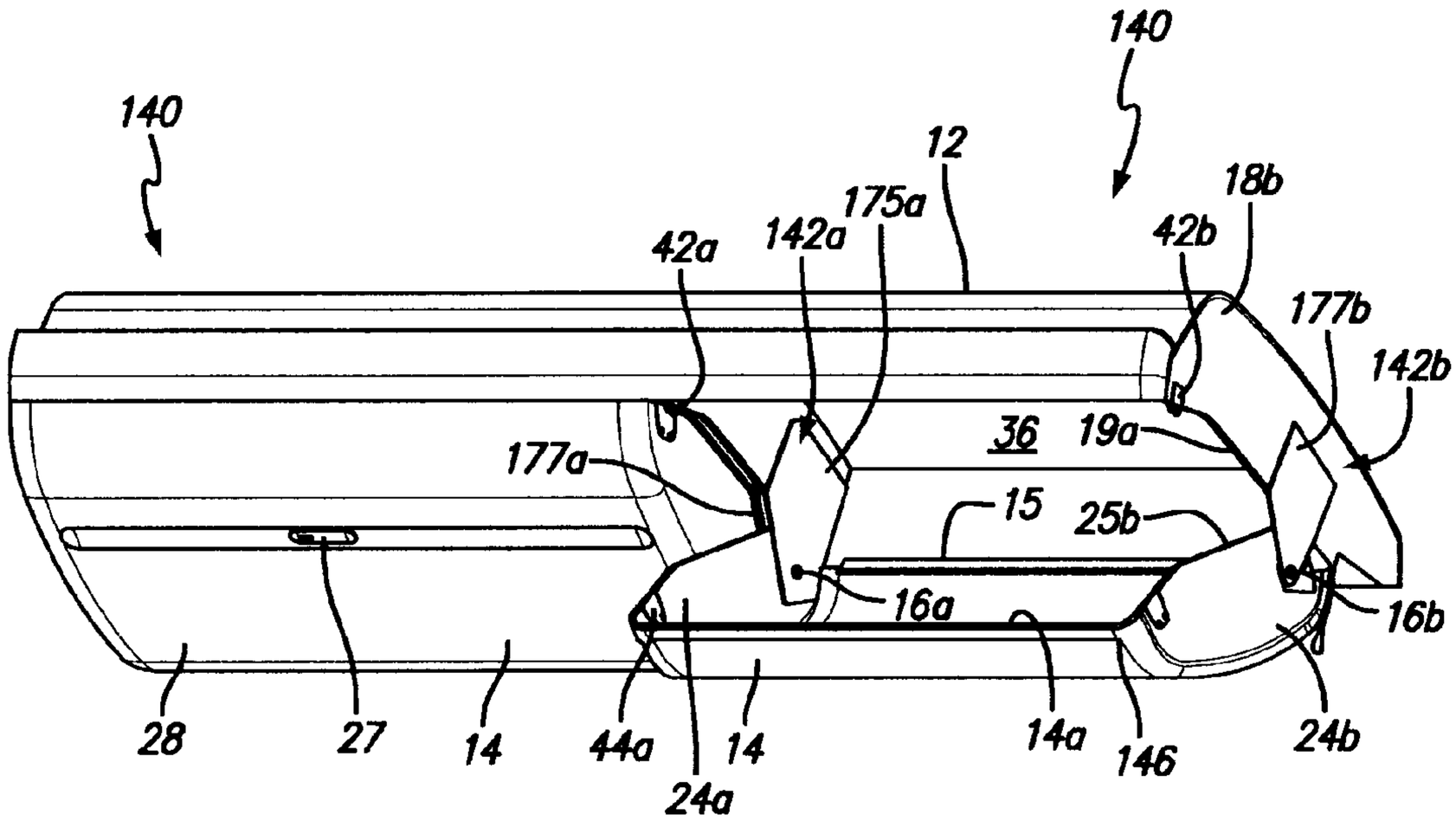
140
140
12
175a
18b
42a
142a
42b
177b
142b
36
19a
177a
15
25b
16a
16b
28
27
14
44a
14
24a
14a
146
24b

FIG. 33

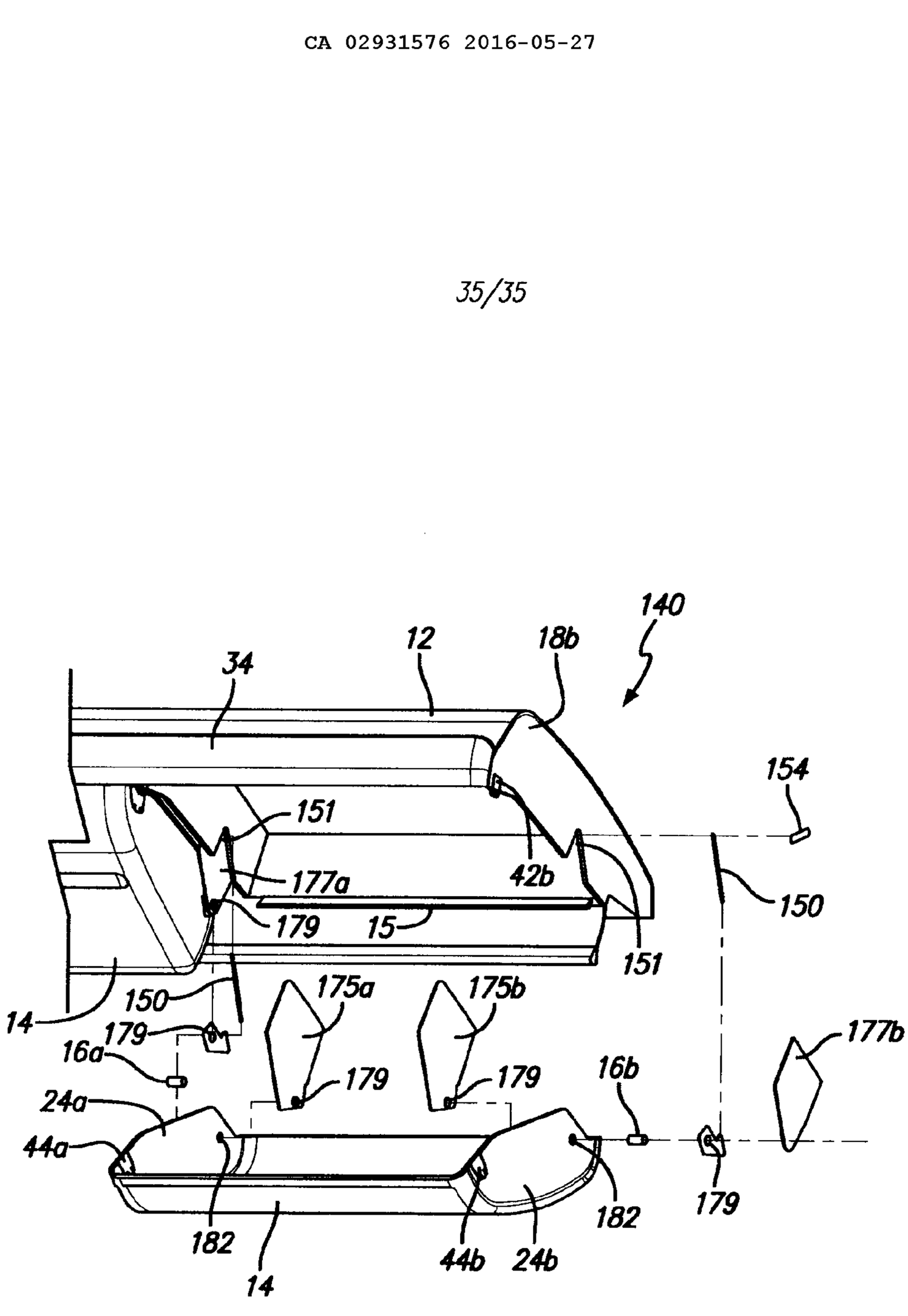
140
12
18b
34
154
151
177a
42b
150
179
15
151
14
150
175a
175b
179
16a
179
179
177b
16b
24a
44a
182
179
182
14
44b
24b

FIG. 34

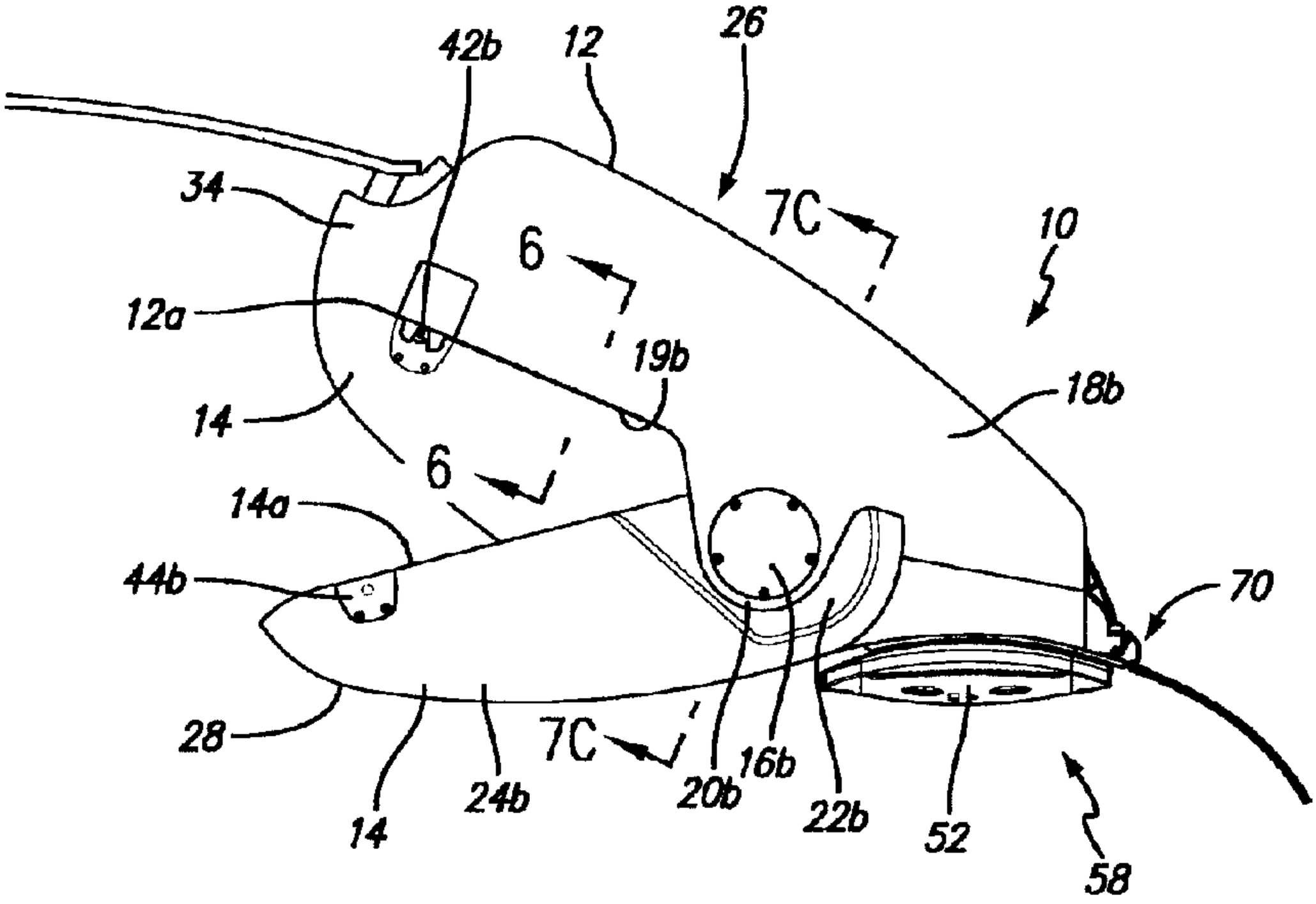
42b
12
26
34
7C
10
6
12a
19b
18b
14
6'
14a
44b
70
28
7C'
16b
20b
22b
52
14
24b
58