Jan. 4, 1944. A. A. CAMPBELL 2,338,095

ADJUSTABLE PROCESSING PUNCH

Filed March 29, 1943

Fig. 1.

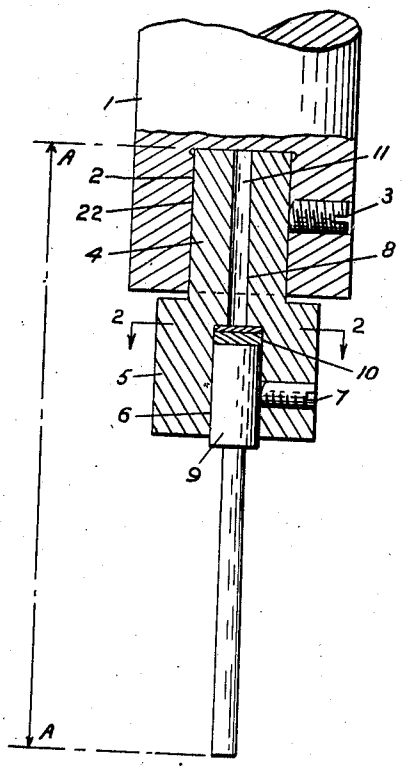

Fig. 3.

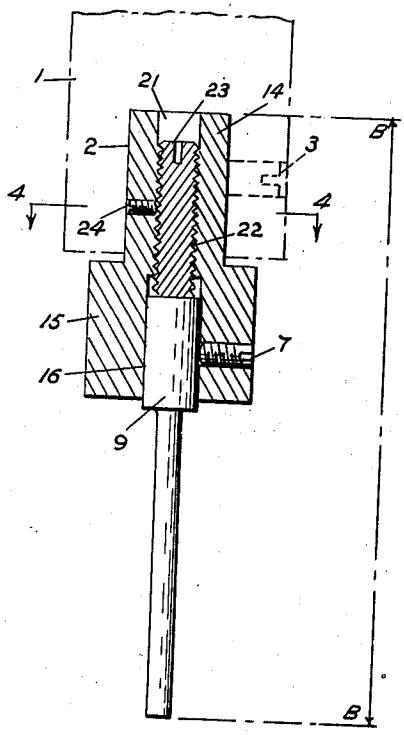

Fig. 2.

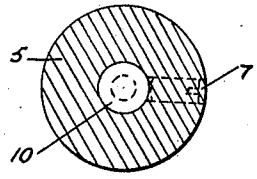

Fig. 4.

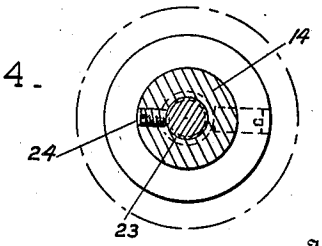

Inventor

Alvin A. Campbell

By C. E. Herrstrom & A. E. Thibodeau

Attorneys

Patented Jan. 4, 1944

2,338,095

UNITED STATES PATENT OFFICE

2,338,095

ADJUSTABLE PROCESSING PUNCH

Alvin A. Campbell, Hackettstown, N. J.

Application March 29, 1943, Serial No. 480,953

1 Claim. (Cl. 164—124)

(Granted under the act of March 3, 1883, as amended April 30, 1928; 370 O. G. 757)

The invention described herein may be manufactured and used by or for the Government for governmental purposes without the payment to me of any royalty thereon.

This invention relates to presses and similar machines, and more particularly, to instrumentalities for holding the punch in operative position in the ram of the press. Because of the severe nature of the work they are required to perform, punches must be frequently replaced or, where possible, re-machined. This necessitates a partial dismantling of the machine to remove the worn punch and to replace it, and the adjusting of the press to the new punch, with consequent loss of production time. It is the object of this invention to devise an improved means for holding the punch in the press ram capable of ready and facile adjustment for the wearing down of the punch. For this and such other objects as may herein appear or be pointed out I have shown two embodiments of the invention in the accompanying drawing, wherein:

Fig. 1 is a sectional elevation of one embodiment.

Fig. 2 is a section taken on the line 2—2 of Fig. 1.

Fig. 3 is a sectional elevation of a second embodiment.

Fig. 4 is a section taken on the line 4—4 of Fig. 3.

In the bottom surface of ram 1 of the press—only a fragmental portion thereof being shown in Fig. 1—is provided a socket 2 in which is received the reduced shank 4 of an adapter 5 and securely held as by means of set screw 3. Adapter 5 is provided with a socket 6 in which is received the shank of a punch 9, set screw 7 being provided to hold the punch in place. Socket 2 of the ram and the adapter 5 are machined to close tolerances for the reason that the control distance, designated A—A in Fig. 1, is measured from the bottom of ram socket 2 to the top of punch 9. When the punch becomes worn and it is necessary to re-machine it, the adapter 5 with the punch held secured therein is removed from the press ram, by loosening set screw 3. The punch is then removed from the socket by loosening set screw 7, and re-machined. This re-machining and re-grinding of the punch shortens its length, so that if directly inserted in adapter socket 6, it would result in the distance A—A, Fig. 1, being less than the predetermined control distance. For this reason there is placed in the adapter socket one or more gauge buttons 10 of selected thickness so that the punch will extend out of socket 6 a distance equivalent to the shortening of the punch, the total overall dimension of the adapter, the selected gauge buttons and the re-ground punch equals the predetermined control distance. The shank 4 of the adapter is provided with a center drill hole 11 communicating with its socket 6, so that a rod or the like may be inserted through the passage 11 to push out the gauge buttons.

A modified form is shown in Figs. 3 and 4 in which adapter 15 is held in ram 1 by its reduced shank 14 received in ram socket 2, and secured by set screw 3, as described in connection with Figs. 1-2. In this case, adapter shank 14 is provided with a tapped center hole 21 in communication with its socket 16, for a screw plug 22 provided at its outer end with a screw-driver slot 23. Screw plug 22 may be screwed in tapped hole 21 to adjust the distance that its end extends into socket 16, to extend punch 9 a sufficient distance so that the dimension from its tip to the floor of the ram socket, B—B in Fig. 3, will equal the predetermined control distance. A set screw 24 is provided in the adapter shank 14 to hold the plug 22 in adjusted position.

I claim:

Punch holding means for mechanical presses having a reciprocated ram, the combination of an adapter provided with a reduced shank, the ram having a socket for receiving the reduced shank of the adapter, fastening means for removably securing the adapter in the ram, the said adapter being provided with a socket for receiving the shank of the punch, fastening means for removably securing the punch in the adapter, and a series of gauge buttons of selected thicknesses adapted to be received in the said socket of the adapter between the floor thereof and the shank of the punch, sufficient thickness of said gauge buttons being interposed to maintain the said control distance despite the reduction in the length of the punch due to re-machining, the said shank of the adapter being provided with a center drill hole communicating with its socket wherethrough a rod may be inserted to push out the said gauge buttons.

ALVIN A. CAMPBELL.